"Tennant Square"

215 TENNANT AVENUE, MORGAN HILL, CALIFORNIA

⚠1 (A PRIVATE CONDOMINIUM HOUSING DEVELOPMENT)

⚠1 NOTE: THERE IS NO GAS INFRASTRUCTURE FOR THIS SITE. (MHMC 15.63 - THE PROHIBITION OF NATURAL GAS INFRASTRUCTURE)

GENERAL NOTES: ⚠1

PLANNING REVIEW CONDITIONS:

1. NOISE: IN ORDER TO COMPLY WITH THE GENERAL PLAN 60db DNL EXTERIOIR NOISE LEVEL STANDARD, TRAFFIC NOISE BARRIERS MEASURING SIX FEET IN HEIGHT RELATIVE TO THE REAR PATIO ELEVATIO, ADJACENT TO TENNANT AVENUE, SHALL BE CONSTRUCTED AT THE UNITS NEAREST TENNANT AVENUE, AS SHOWN IN FIGURE 2 OF THE NOISE STUDY (APPENDEX D OF THE CATEGORICAL EXEMPTION MEMORANDUM). TRAFFICE NOISE BARRIERS SHALL BE IDENTIFIED ON SITE DEVELOPMENT PLANS AND BUILDING PERMIT PLANS PRIOR TO ISSUANCE OF A BUILDING PERMIT.
   A. THE RECOMMENDED NOISE BARRIERS COULD TAKE THE FORM OF A SOLID MASONRY WALL OR WOOD FENCE
   B. SHOULD THE CONSTRUCTION OF A WOOD FENCE BE SELECTED AS A BARIER, THE FENCE SLATS SHOULD OVER LAP A MINIMUM OF 2 INCHES AND BE SCREWED TO THE FRAMING RATHER THAN NAILED. THE PURPOSE OF THE OVERLAPPING SLATS AND USING SCREWS RATHER THEN NAILS IS TO ENSURE THAT PROLONGED EXPOSURE TO THE ELEMENTS DOES NOT RESULT IN VISIBLE GAPS THROUGH THE SLATS WHICH WOULD RESULT IN REDUCED NOISE BARRIER EFFECTIVENESS.

2. HABITAT PLAN:
   A. FEES: THE PROJECT IS COVERED PURSUANT TO THE SANTA CLARA VALLEY HABITAT PLAN (HABITAT PLAN) AND SUBJECT TO FEES AND CONDITIONS CONTAINED IN THE HABITAT PLAN. PLEASE SUBMIT FULL SCVHA APPLICATION PACKAGE AND PAY ANY APPLICABLE FEES.
   B. CONDITIONS: ANY ADDITIONAL CONDITIONS OR MITIGATIONS REQUIRED BY THE HABITAT PLAN SHALL BE CLEARLY STATED ON ALL PLANS THAT INVOLVE ANY GROUND DISTURBING ACTIVITY (I.E. GRADING PLANS, IMPROVEMENT PLANS, PAVING PLANS, DEMOLITION PLANS OR OTHER PLANS FOR SITE CLEARING OR TEMPRORARY STOCKPILE OF DIRT). (MHMC 18.132)

FIRE PLAN REVIEW CONDITIONS:

NOTE: "COMBUSTIBLES WILL NOT BE ALLOWED ON SITE PRIOR TO APPROVAL OF THE FIRE INSPECTOR."

BUILDING DEPARTMENT COMMENT:

NOTE: THE AOR WILL REQUIRE TO PROVIDE A COMPLIANCE LETTER THAT THE PROJECT COMPLIES WITH THE 2019 CAL-GREEN BUILDING CODE MANDATORY MEASURES PRIOR TO FINAL INSPECTION.

FIRE PREVENTION: ⚠2

THIS PROJECT SHALL CONFORM TO THE CITY OF MORGAN HILL'S FIRE PREVENTION DIVISION STANDARD DETAILS AND SPECIFICIATIONS.

THIS PROJECT SHOWS A DEFERRED SUBMITTAL FOR A NFPA FIRE SUPPRESSION SYSTEM. AT TIME OF BUILDING PERMIT SUBMITTAL, THE OWNER / DEVELOPER SHALL REVIEW CODE. THIS MAY BE REQUIRED TO BE DESIGNED UNDER THE NFPA 13r GUIDELINES.

HOUSING: ⚠2

THE APPLICANT SHALL EXECUTE AN INCLUSIONARY AFFORDABLE HOUSING AGREEMENT PREPARED BY THE CITY ATTORNEY, APPROVED BY THE CITY MANAGER, AND RECOREDED AGAINST THE PROPERTY UPON WHICH THE PROJECT WILL BE DEVELOPED, PRIOR TO THE RECORDATION OF THE PARCEL MAP OR FINAL MAP IN THE CASE OF SUBDIVISIONS AND PRIOR TO THE ISSUANCE OF THE BUILDING PERMITS FOR ANY RESIDENTIAL PROJECT THAT DOES NOT REQUIRED A PARCEL MAP OR FINAL MAP. MHMC 14.04.050).

FIRE NOTES: ⚠2

1. ALL BUILDINGS ARE TO BE EQUIPPED WITH AN NFPA 13D FIRE SUPPRESSION SYSTEM PER CBC SECTION 903.3.1.1.
2. ALL CONSTRUCTION SHALL CONFORM TO THE REQUIREMENTS OF THE CALIFORNIA FIRE CODE CURRENTLY IN EFFECT AND THE CITY OF MORGAN HILL BUILDING AND SAFETY DIVISION. ALL PERMITS SHALL BE OBTAINED AS REQUIRED.
3. FIRE ALARM SYSTEM SHALL BE PROVIDED AND INSTALLED IN ACCORDANCE WITH THE CFC CURRENTLY IN EFFECT AND THE NATIONAL FIRE ALARM CODE. NOTIFICATION APPLIANCES AND MANUAL FIRE ALARM BOXES SHALL BE PROVIDED IN ALL AREAS ACONSISTENT WITH THE DEFINITION OF A NOTIFICATION ZONE (NOTIFICATION ZONES COINCIDE WITH THE THE SMOKE AND FIRE ZONES OF A BUILDING). SHOP DRAWINGS SHALL BE SUBMITTED FOR PERMIT ISSUANCE IN COMPLIANCE WITH CFC CURRENTLY IN EFFECT.
4. ALL BUILDINGS UNDERGOING CONSTRUCTION, ALTERATION OR DEMOLITION SHALL COMPLY WITH CAPTER 14 (CALIFORNIA BUILDING CODE CURRENTLY IN EFFECT, THE CALIFORNIA FIRE CODE CURRENTLY IN EFFECT AND THE CITY OF MORGAN HILL. IF REQUIRED PLANS AND SPECIFICATIONS FOR THE AUTOMATIC FIRE SPRINKLER SYSTEM SHALL BE SUBMITTED TO THE MORGAN HILL FIRE DEPARTMENT FOR REVIEW AND APPROVAL PRIOR TO INSTALLATION. THE FIRE ALAMR SYSTEM INCLUDING WATER FLOW AND TAMPER VALVE, SHALL HAVE PLANS AND SPECIFICATIONS SUBMITTED TO FIRE PREVENTION FOR REVIEW AND APPROVAL PRIIOR TO THE INSTALLATION. ALL REQUIRED INSPECTIONS AND WITNESSING OF TESTS SHALL BE COMPLETED PRIOR TO FINAL INSPECTION AND OCCUPANCY OF THE BUILDING(S).

PUBLIC WORKS: ⚠2

1. FINAL MAP RECORDATION MUST BE COMPLETED.
2. GRD PERMIT MUST BE APPROVED.
3. ENCROACHMENT PERMIT MUST BE ISSUED.

PROJECT DEVELOPMENT DATA:

<u>SITE DEVELOPMENT DATA:</u>

A.P.N.	817-04-059
PROPERTY ADDRESS:	215 TENENT AVENUE MORGAN HILL, CALIFORNIA - 95037
OCCUPANCY GROUP:	R-2/U
CONSTRUCTION TYPE:	VB
LOT SIZE:	43,249.000 SQUARE FEET (GROSS)
GENERAL PLAN:	MIXED USE
ZONING:	RAL - LOW DENSITY
NUMBER OF STORIES:	2
WILLIAMSON ACT:	NO

<u>DEVELOPMENT DESIGN DATA:</u>

NUMBER OF RESIDENTIAL UNITS:	16 UNITS
NUMBER OF AFFORDABLE (BMR) DWELLING UNITS:	2 UNITS PROVIDED
NUMBER OF ASSISTED (ADA) DWELLING UNITS:	2 UNITS PROVIDED
NUMBER OF STANDARD DWELLING UNITS:	14 UNITS PROVIDED*
REQUIRED PARKING:	27 SPACES
PARKING PROVIDED: ⚠1	27 SPACES
COVERED PARKING PROVIDED:	16 SPACES PROVIDED
OPEN / UNCOVERED PARKING PROVIDED:	11 SPACES PROVIDED
TOTAL PARKING PROVIDED:	27 SPACES
UNIT "A" LIVING AREA:	1,624.300 SQUARE FEET
UNIT "A" 1 CAR GARAGE AREA:	278.600 SQUARE FEET
UNIT "A" - ADU UNIT - LIVING AREA:	1,561.300 SQUARE FEET
UNIT "A" - ADU UNIT - 1 CAR GARAGE AREA:	341.600 SQUARE FEET
UNIT "B" LIVING AREA:	1,592.400 SQUARE FEET
UNIT "B" 1 CAR GARAGE AREA:	252.300 SQUARE FEET
UNIT "B" DECK AREA:	167.500 SQUARE FEET

<u>GENERAL BUILDING DESIGN DATA:</u> ⚠2

BASE BUILDING DESIGN DATA:

BUILDING #1:	
BUILDING #1 LOWER LEVEL SQUARE FOOTAGE:	1,704.273 SQUARE FEET
BUILDING #1 UPPER LEVEL SQUARE FOOTAGE:	2,025.875 SQUARE FEET
BUILDING #1 DECK SQUARE FOOTAGE:	249.875 SQUARE FEET
TOTAL BUILDING #1 SQUARE FOOTAGE:	3,980.138 SQUARE FEET
BUILDING #2:	
BUILDING #2 LOWER LEVEL SQUARE FOOTAGE:	1,704.273 SQUARE FEET
BUILDING #2 UPPER LEVEL SQUARE FOOTAGE:	2,025.875 SQUARE FEET
BUILDING #2 DECK SQUARE FOOTAGE:	249.875 SQUARE FEET
TOTAL BUILDING #2 SQUARE FOOTAGE:	3,980.138 SQUARE FEET
TOTAL COMBINED BUILDING SQUARE FOOTAGE:	7,960.276 SQUARE FEET
DESIGNED BUILDING MAXIMUM HEIGHT:	27'-8" (BOTH BLDGS. #1 & #2)

⚠1 <u>PROJECT DESCRIPTION:</u>

THE INTENT OF THESE CONTRACT DOCUMENTS IS TO CONSTRUCT 2 SEPERATE, 2 STORY MULTI-RESIDENTIAL (8 UNITS EACH TOTALING 16 PRIVATE CONDOMINIUM UNITS) HAVING 2 DISTINCT FLOOR PLANS (UNITS "A" AND "B"), EACH HAVING 3 BEDROOMS, 2.5 BATHROOMS AND HAVING AN ATTACHED 1 CAR GARAGE EQUIPPED WITH APPROVED WIRING FOR FUTURE ELECTIC VEHICLE CHARGING STATION. 2 OF THE UNITS ARE A.D.A. COMPLIANT DESIGNED TO COMPLY WITH CALIFORNIA CODE OF REGULATIONS TITLE #24. ALSO, THIS PROJECT IS DESIGNED TO COMPLY WITH THE CITY OF MORGAN HILL'S HOUSING AUTHORITY HAVING 2 UNIT'S SET ASIDE FOR THE BELOW MARKET RATE (BMR) DESIGNATION. PARKING PROVIDED IS IN COMPLIANCE WITH LOCAL STANDARDS AND REQUIRMENTS HAVING 1 COVERED PARKING GARAGE FOR EACH DWELLING UNIT (TOTAL OF 16) AND .76 PARKING SPACES - TOTAL OF 11 - UNCOVERED PARKING SPACES PROVIDED TO CONFORM WITH REQUIRED GUIEST AND AND OVERFLOW PARKING.

CODES:

<u>APPLICABLE CODES:</u>

- ASCE 7-16 AMERICAN SOCIETY OF CIVIL ENGINEERS (ASCE)
- ⚠1 ACI 318-14 AMERICAN CONCRETE INSTITUTE (ACI)
- CALIFORNIA BUILDING CODE - 2019 EDITION (C.B.C.)
- CALIFORNIA RESIDENTIAL CODE - 2019 EDITION (C.R.C.)*
- CALIFORNIA MECHANICAL CODE - 2019 EDITION (C.M.C.)
- CALIFORNIA PLUMBING CODE - 2019 EDITION (C.P.C.)
- CALIFORNIA ELECTRICAL CODE - 2019 EDITION (C.E.C.)
- CALIFORNIA FIRE CODE - 2019 EDITION (C.F.C.)
- CALIFORNIA GREEN CODE - 2019 EDITION (C.E.C.)
- CALIFORNIA ENERGY CODE - 2019 EDITION (CEnC)
- CALIFORNIA GREEN BUILDIING STANDARDS CODE - 2019 EDTION (CALGreen)
- SPECIAL DESIGN PROVISIONS FOR WIND & SEISMIC - 2015 EDITION (SDPWS)
- ⚠1 "ALONG WITH ANY AND ALL OTHER LOCAL AND STATE LAWS AND REGULATIONS".

* PLEASE NOTE THAT THESE DOCUMENTS HAVE BEEN DESIGNED TO COMPLY W/ THE 2019 CALIFORNIA RESIDENTIAL CODE (C.R.C.)

PROJECT TEAM:

<u>PROJECT OWNER:</u>
OSITO HOLDINGS, LLC
P.O. BOX 2827
MESA, ARIZONA - 85214
480.646.6323

<u>PROJECT ARCHITECT:</u>
SC DESIGN GROUP
20370 TOWN CENTER LANE - #139
CUPERTINO, CALIFORNIA - 95014
SUSAN CHEN, ARCHITECT
408.865.0577

<u>STRUCTURAL:</u>
GOUVIS ENGINEERING
CONSULTING GROUP, INC.
15 STUDEBAKER
IRVINE, CALIFORNIA - 92618
1.949.752.1612

<u>CIVIL ENGINEER:</u>
HANNA / BRUNETTI CIVIL ENGINEERING
7651 EIGLEBERRY STREET
GILROY, CALIFORNIA - 95020
408.842.2173

<u>ELECTRICAL ENGINEER:</u>
GOUVIS ENGINEERING
CONSULTING GROUP, INC.
15 STUDEBAKER
IRVINE, CALIFORNIA - 92618
1.949.752.1612

<u>MECHANICAL ENGINEER:</u>
GOUVIS ENGINEERING
CONSULTING GROUP, INC.
15 STUDEBAKER
IRVINE, CALIFORNIA - 92618
1.949.752.1612

<u>PLUMBING ENGINEER:</u>
GOUVIS ENGINEERING
CONSULTING GROUP, INC.
15 STUDEBAKER
IRVINE, CALIFORNIA - 92618
1.949.752.1612

<u>ENERGY COMPLIANCE:</u>
GOUVIS ENGINEERING
CONSULTING GROUP, INC.
15 STUDEBAKER
IRVINE, CALIFORNIA - 92618
1.949.752.1612

<u>SOILS ENGINEER:</u>
QUANTUM GEOTECHNICAL, INC.
6288 SAN IGNACIO AVENUE - SUITE "D"
SAN JOSE, CALIFORNIA - 95115
408.629.3822
PROJECT FILE NO. D071.G
DATED: MARCH 29, 2018

<u>LANDSCAPE ARCHITECT:</u>
AITKEN ASSOCIATES
LANDSCAPE ARCHITECTS
KAREN AITKEN LANDSCAPE ARCHITECT
8162 RANCHO REAL / GILROY, CALIFORNIA - 95020
(408).842.0245

DRAWING INDEX:

<u>GENERAL DOCUMENTS:</u>

⚠2	T.1	TITLE / COVER SHEET, GENERAL NOTES AND CONDITIONS
⚠1	T.2	DOOR AND WINDOW SCHEDULES W/ MISC. NOTES
⚠1	T.3	ROOM FINISH SCHEDULES
	BPFCB	BLUEPRINT FOR A CLEAN BAY
	COA.1	CONDITIONS OF APPROVAL
⚠2	COA.2	CONDITIONS OF APPROVAL
	COA.3	CONDITIONS OF APPROVAL / BUILDING SECURITY
⚠2	COA.4	BUILDING SECURITY
	NAS.1	NOISE ASSESSEMENT STUDY
⚠2	NAS.2	NOISE ASSESSEMENT STUDY

<u>CIVIL & SITE DEVELOPMENT PLANS:</u>

	C1	CIVIL COVER SHEET & GENERAL NOTES
	C2	NOTES / LEGEND / ABBREVIATIONS
	C3	EXIST. TOPOGRAPHY PLAN
	C4	SITE PLAN
	C5	GRADING & DRAINAGE PLAN
	C6	GRADING & DRAINAGE PLAN
	C7	DEVELOPMENT PLAN & CROSS SECTIONS
	C8	UTILITY PLAN & OSITO PLACE PROFILE
	C9	TENNANT AVENUE PLAN & PROFILE
	C10	CITY PAVEMENT SPEC'S & DETAILS
	C11	EROSION CONTROL PLAN
	C12	STORM WATER CONTROL PLAN
	C13	STORMTECH DETAILS
	C14	STORMTECH DETAILS
	C15	STRIPPING AND SIGNAGE PLAN
	JT1	JOINT TRENCH COMPOSITE PLAN - COVER SHEET
⚠1	JT2	JOINT TRENCH COMPOSITE PLAN SECTIONS / DETAILS
	JT3	JOINT TRENCH COMPOSITE PLAN
	SL1	STREET LIGHT PLAN
	E1	ELECTRIC CONSTRUCTION PLAN
⚠2	PHM	PHOTOMETRIC SITE PLAN
	AS.1	DESIGN DEVELOPMENT PLAN

<u>DESIGN DEVELOPMENT PLANS:</u>

BUILDING "1":

	B1-A.0	MASTER FLOOR PLANS BUILDING "1"
	B1-A.1	FLOOR PLAN "A" - NOTES AND TAGS ONLY
	B1-A.1.1	FLOOR PLAN "A" - DIMENSIONS ONLY
	B1-A.2	FLOOR PLAN "A" - A.D.A. - NOTES AND TAGS ONLY
	B1-A.2.1	FLOOR PLAN "A" - A.D.A - DIMENSIONS ONLY
	B1-A.3	FLOOR PLAN "B" - NOTES AND TAGS ONLY
	B1-A.3.1	FLOOR PLAN "B" - DIMENSIONS ONLY
	B1-A.4	MASTER EXTERIOR ELEVATIONS - BUILDING "1"
	B1-A.4.1	FRONT EXTERIOR ELEAVAION AND NOTES - BUILDING "1"
	B1-A.4.2	SIDE ELEVATIONS AND NOTES - BUILDING "1"
	B1-A.4.3	REAR ELEVATION AND NOTES - BUILDING "1"
	B1-A.5	MASTER ROOF PLAN AND PARTIAL ROOF PLAN BUILDING "1"
	B1-A.5.1	PARTIAL ROOF PLAN BUILDING "1"
⚠1	B1-A.5.2	MISC. ROOF FRAMING DETAILS - BUILDING "1"
	B1-A.6	CROSS-SECTIONAL ELEVATIONS & NOTES BUILDING "1"
	B1-A.7	FLOOR PLAN "A" - FLOOR FINISH PLAN
	B1-A.7.1	FLOOR PLAN "A" - A.D.A. - FLOOR FINISH PLAN
	B1-A.7.2	FLOOR PLAN "B" - FLOOR FINISH PLAN
	B1-A.8	EXTERIOR ELEVATIONS (DETAIL TAGS ONLY)
	B1-A.8.1	EXTERIOR ELEVATIONS (DETAIL TAGS ONLY) AND DETAILS
	B1-A.8.2	EXTERIOR ELEVATIONS (DETAIL TAGS ONLY) AND DETAILS
⚠1	B1-A.8.3	A.D.A. BATHROOM PLAN, MISC. A.D.A. DETAILS & MISC. THRU-WALL PENITRATION FRAMING DETAILS

BUILDING "2":

	B2-A.0	MASTER FLOOR PLANS BUILDING "2"
	B2-A.1	FLOOR PLAN "A" - NOTES AND TAGS ONLY
	B2-A.1.1	FLOOR PLAN "A" - DIMENSIONS ONLY
	B2-A.2	FLOOR PLAN "A" - A.D.A. - NOTES AND TAGS ONLY
	B2-A.2.1	FLOOR PLAN "A" - A.D.A - DIMENSIONS ONLY
	B2-A.3	FLOOR PLAN "B" - NOTES AND TAGS ONLY
	B2-A.3.1	FLOOR PLAN "B" - DIMENSIONS ONLY
	B2-A.4	MASTER EXTERIOR ELEVATIONS - BUILDING "2"
	B2-A.4.1	FRONT EXTERIOR ELEVATION AND NOTES - BUILDING "2"
	B2-A.4.2	SIDE ELEVATIONS AND NOTES - BUILDING "2"
	B2-A.4.3	REAR ELEVATION AND NOTES - BUILDING "2"
	B2-A.5	MASTER ROOF PLAN AND PARTIAL ROOF PLAN BUILDING "2"
	B2-A.5.1	PARTIAL ROOF PLAN - BUILDING "2"
⚠1	B2-A.5.2	MISC. ROOF FRAMING DETAILS - BUILDING "2"
	B2-A.6	CROSS-SECTIONAL ELEVATIONS & NOTES BUILDING "2"
	B2-A.7	FLOOR PLAN "A" - FLOOR FINISH PLAN
	B2-A.7.1	FLOOR PLAN "A" - A.D.A. - FLOOR FINISH PLAN
	B2-A.7.2	FLOOR PLAN "B" - FLOOR FINISH PLAN
	B1-A.8	EXTERIOR ELEVATIONS (DETAIL TAGS ONLY)
	B1-A.8.1	EXTERIOR ELEVATIONS (DETAIL TAGS ONLY) & DETAILS
	B1-A.8.2	EXTERIOR ELEVATIONS (DETAIL TAGS ONLY) & DETAILS
⚠1	B2-A.8.3	A.D.A. BATHROOM PLAN, MISC. A.D.A. DETAILS & MISC. THRU-WALL PENITRATION FRAMING DETAILS

<u>STRUCTURAL PLANS:</u>

SN1A	GENERAL NOTES & REQUIREMENTS
SN1B	GENERAL NOTES & REQUIREMENTS
SN2	STRUCTURAL DETAILS AND NOTES
SN3	STRUCTURAL DETAILS AND NOTES
S-1.1	OVERALL P.T. FOUNDATION PLAN - BUILDING 1
S-1.1A	P.T. FOUNDATION PLAN BUILDING 1 - AREA A
S-1.1B	P.T. FOUNDATION PLAN BUILDING 1 - AREA B
S-1.2	OVERALL FRAMING PLAN BUILDING 1
S-1.2A	FLOOR FRAMING PLAN BUILDING 1 - AREA A
S-1.2B	FLOOR FRAMING PLAN BUILDING 1 - AREA B
S-1.3	OVERALL ROOF FRAMING PLAN BUILDING 1
S-1.3A	ROOF FRAMING PLAN BUILDING 1 - AREA A
S-1.3B	ROOF FRAMING PLAN BUILDING 1 - AREA B
S-2.1	P.T. FOUNDATION PLAN BUILDING 2
S-2.1A	P.T. FOUNDATION PLAN BUILDING 2 - AREA A
S-2.1B	P.T. FOUNDATION PLAN BUILDING 2 - AREA B
S-2.2	OVERALL FLOOR FRAMING PLAN - BUILDING 2
S-2.2A	FLOOR FRAMING PLAN BUILDING 2 - AREA A
S-2.2B	FLOOR FRAMING PLAN BUILDING 2 - AREA B
S-2.3	OVERALL ROOF FRAMING PLAN BUILDING 2
S-2.3A	ROOF FRAMING PLAN BUILDING 2 - AREA A
S-2.3B	ROOF FRAMING PLAN BUILDING 2 - AREA B
PT1	POST TENSION MAT FOUNDATION DET'S & NOTES
SD2	GENERAL DETAILS & NOTES
SD3	STRUCTURAL DETAILS
SD4	STRUCTURAL DETAILS
WSWH1	SIMPSON STRONG TIES - ANCHORAGE DETAILS AND NOTES
WSWH2	SIMPSON STRONG TIES - FRAMING DETAILS AND NOTES
WSWH3	SIMPSON STRONG TIES - FRAMING DETAILS AND NOTES

<u>ELECTRICAL PLANS:</u>

E-0.0	SPECIFICION NOTES AND SHEET INDEX
E-0.1	GENERAL NOTES
E-0.2	ABBREVIATIONS AND SYMBOLS LIST
E-0.3	DETAILS
E-0.3A	DETAILS
E-0.4	SINGLE LINE DIAGRAM, LOAD CALCULATIONS AND EQUIPMENT SCHEDULES
E-0.5	PANEL SCHEDULES
E-2.1	BUILDING 1 LOWER & UPPER ROOF PLANS
E-2.2	BUILDING 2 LOWER & UPPER ROOF PLANS
E-3.1	UNIT A - FLOOR PLANS
E-3.2	UNIT A (A.D.U.) FLOOR PLANS
E-3.3	UNIT B FLOOR PLANS

<u>MECHANICAL PLANS:</u>

M-0.1	GENERAL NOTES
M-0.2	LEGENDS
M-0.3	EQUIPMENT SCHEDULES
M-2.1	BUILDING "A" FLOOR PLANS
M-2.2	BUILDING "B" FLOOR PLANS
M-3.1	UNIT A & A-A.D.U. FLOOR PLANS
M-3.2	UNIT B FLOOR PLANS
MD-1	DETAILS
MD-2	DETAILS

<u>PLUMBING PLANS:</u>

P-0.1	GENERAL NOTES & SHEET INDEX
P-0.2	MATERIAL AND FIXTURE SCHEDULE AND CALCULATIONS
P-0.3	CALCULATIONS
P-2.1	BUILDING TYPE 1 FLOOR PLANS - WASTE LATERIAL, AND SEWER LATERIAL AND NATURAL GAS LATERIAL
P-2.2	BUILDING TYPE 2 FLOOR PLANS - WASTE LATERIAL, AND SEWER LATERIAL AND NATURAL GAS LATERIAL
P-3.1A	UNIT "A" FLOOR PLANS - COLD / HOT WATER

<u>PLUMBING PLANS (cont.):</u>

P-3.1B	UNIT "A" FLOOR PLANS - WASTE / VENT PIPING AND FC CONDENSATE
P-3.2A	UNIT "B" FLOOR PLANS - COLD / HOT WATER
P-3.2B	UNIT "B" FLOOR PLANS - WASTE / VENT PIPING AND FC CONDENSATE
P-4.1	DIAGRAMS - UNIT A
P.4.2	DIAGRAMS - UNIT A ADU
P-4.3	DIAGRAMS - UNIT B
P-D.1	DETAILS

<u>LANDSCAPE PLANS:</u>

L-0	LANDSCAPE COVER SHEET
L-1	LANDSCAPE PLAN
L-2	LANDSCAPE IRRIGATION PLAN
L-3	IRRIGATION DETAILS
L-4	LANDSCAPE SITE AMENITIES

<u>TITLE #24 - ENERGY COMPLIANCE:</u>

TITLE #24-1	ENERGY COMPLIANCE
TITLE #24-2	ENERGY COMPLIANCE
TITLE #24-3	ENERGY COMPLIANCE
TITLE #24-4	ENERGY COMPLINACE
TITLE #24-MM1	MANDATORY MEASURES
CAL-GREEN MM1	MANDATORY MEASURES UNIT 'A'
CAL-GREEN MM2	MANDATORY MEASURES UNIT 'A'
CAL-GREEN MM1	MANDATORY MEASURES UNIT 'A' - (A.D.A.)
CAL-GREEN MM2	MANDATORY MEASURES UNIT 'A' - (A.D.A.)
CAL-GREEN MM1	MANDATORY MEASURES UNIT 'B'
CAL-GREEN MM2	MANDATORY MEASURES UNIT 'B'
GB-1	GREEN BUILDING CHECKLIST

<u>OUTDOOR LIGHTING CERTIFICATE OF COMPLIANCE:</u>

LMCC-LTO-01-E	CERTIFICATE OF COMPLIANCE

VICINITY MAP: ⚠1

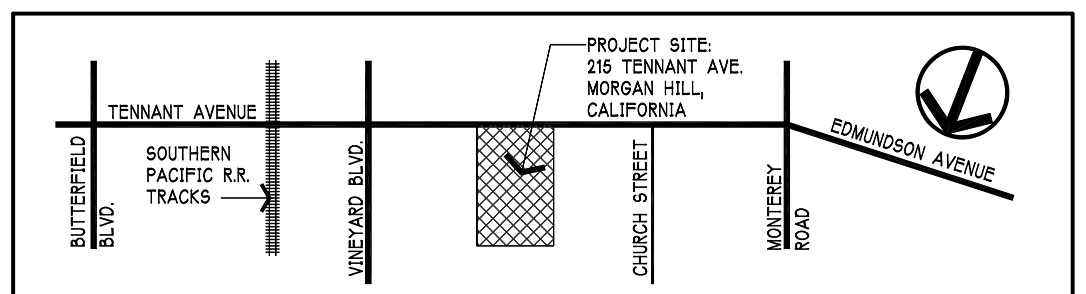

THESE DRAWINGS ARE THE PROPERTY OF OSITO HOLDINGS, LLC AND ARE INTENDED FOR USE SOLELY ON THE PROJECT TITLED HEREON. THESE DRAWINGS AS PROTECTED UNDER COPYRIGHT LAWS ARE NOT TO BE REPRODUCED IN WHOLE OR PART IN ANY MANNER WITHOUT THE EXPRESSED WRITTEN CONSENT OF THE DESIGNER. USE OF THESE DRAWINGS IS LIMITED TO THE SITE INTENDED AND THEIR USE AT ANY OTHER SITE, OR ON OTHER PROJECTS IS PROHIBITED EXCEPT BY PRIOR WRITTEN CONSENT OF THE DESIGNER. ALL REPRODUCTIONS OF THESE DRAWINGS, IN WHOLE OR PART, REMAIN UNDER THE OWNERSHIP OF THE DESIGNER AND SHALL BE RETURNED UPON COMPLETION OF THE PROJECT OR UPON REQUEST OF THE DESIGNER.

COPYRIGHT © 2020

OWNER / DEVELOPER:
OSITO HOLDINGS, LLC
P.O. BOX 2827
MESA, AZ 85214
(480) 646 6323

PROJECT:
TENNANT SQUARE
215 TENNANT AVENUE
MORGAN HILL, CA.
COUNTY OF
SANTA CLARA

DRAWING:
TITLE, COVER & GENERAL DATA SHEET

LICENSED ARCHITECT
ZUISHUANG CHEN
NO. C-28156
REN. 5/31/25
STATE OF CALIFORNIA

REVISIONS:
⚠1 02.20.2023 PLAN CHECK RESPONSE
⚠2 02.09.2024 PLAN CHECK RESPONSE

DATE:	JUNE 03, 2024
SCALE:	AS NOTED
DRAWN BY:	G.E.MOORE
PROJ. MGR.	G.E.MOORE
PROJECT FILE:	0.20-TENNANT
DRAWING:	T.1

DOOR & WINDOW SCHEDULES

NOTE: DOOR AND WINDOW QUANTITIES AS SHOWN ARE SUBJECT TO CHANGE. THE GENERAL CONTRACTOR IS TO CONSULT WITH THE DEVELOPER FOR PROPER SIZING, TYPE AND QUANTITY PRIOR TO ORDERING ALL DOORS AND WINDOWS AS SHOWN.

FLOOR PLAN "A" - WINDOWS:

SYM.	SIZE	DESCRIPTION	%OPEN	REMARKS	QTY.
1	8'-6" X 5'-0"	SELECTION BY THE DEVELOPER	33%	2 LITE - SLIDER	1
2	6'-0" X 8'-0"	SELECTION BY THE DEVELOPER	50%	2 LITE - SLIDING PATIO DOOR - TEMPERED	1
3	4'-0" X 4'-6"	SELECTION BY THE DEVELOPER	50%	2 LITE - SLIDER	1
4	3'-0" X 3'-0"	SELECTION BY THE DEVELOPER	00%	1 LITE - FIXED - TEMPERED	2
5	3'-0" X 6'-0"	SELECTION BY THE DEVELOPER	00%	1 LITE - FIXED - TEMPERED	3
6	3'-0" X 6'-0"	SELECTION BY THE DEVELOPER	50%	2 LITE - SINGLE HUNG	2
7	2'-6" X 2'-6"	SELECTION BY THE DEVELOPER	00%	1 LITE - FIXED	3
8	2'-6" X 2'-6"	SELECTION BY THE DEVELOPER	100%	1 LITE - FIXED - TEMPERED	2
9	2'-6" X 2'-6"	SELECTION BY THE DEVELOPER	00%	1 LITE - FIXED - TEMPERED	1
10	8'-6" X 6'-0"	SELECTION BY THE DEVELOPER	33%	2 LITE - SLIDER	1
11	6'-0" X 6'-0"	SELECTION BY THE DEVELOPER	50%	2 LITE - SLIDER	1

FLOOR PLAN "B" - WINDOWS:

SYM.	SIZE	DESCRIPTION	%OPEN	REMARKS	QTY.
12	4'-0" X 4'-6"	SELECTION BY THE DEVELOPER	50%	2 LITE - SLIDER - TEMPERED /1	1
13	2'-0" X 3'-0"	SELECTION BY THE DEVELOPER	50%	2 LITE - SINGLE HUNG - TEMPERED	1
14	6'-0" X 4'-6"	SELECTION BY THE DEVELOPER	50%	2 LITE - SLIDER	1
15	6'-0" X 5'-6"	SELECTION BY THE DEVELOPER	50%	2 LITE - SLIDER	2
16	5'-0" X 5'-6"	SELECTION BY THE DEVELOPER	50%	2 LITE - SLIDER - TEMPERED [FROSTED]	1
17	3'-6" X 2'-6"	SELECTION BY THE DEVELOPER	00%	1 LITE - FIXED - TEMPERED [FROSTED]	1
18	3'-0" X 5'-6"	SELECTION BY THE DEVELOPER	100%	2 LITE - SLIDER	1
19	8'-6" X 6'-0"	SELECTION BY THE DEVELOPER	33%	2 LITE - SLIDER	1
20	16'-0" X 8'-0"	SELECTION BY THE DEVELOPER	50%	4 PANEL - SLIDING PATIO DOOR - TEMPERED	1

FLOOR PLAN "A" (A.D.A. UNIT) - WINDOWS

SYM.	SIZE	DESCRIPTION	%OPEN	REMARKS	QTY.
1	8'-6" X 5'-0"	SELECTION BY THE DEVELOPER	33%	2 LITE - SLIDER	1
2	6'-0" X 8'-0"	SELECTION BY THE DEVELOPER	50%	2 LITE - SLIDING PATIO DOOR - TEMPERED	1
3	4'-0" X 4'-6"	SELECTION BY THE DEVELOPER	50%	2 LITE - SLIDER	1
4	3'-0" X 3'-0"	SELECTION BY THE DEVELOPER	00%	1 LITE - FIXED - TEMPERED	2
5	3'-0" X 6'-0"	SELECTION BY THE DEVELOPER	00%	1 LITE - FIXED - TEMPERED	3
6	3'-0" X 6'-0"	SELECTION BY THE DEVELOPER	50%	2 LITE - SINGLE HUNG	2
7	2'-6" X 2'-6"	SELECTION BY THE DEVELOPER	00%	1 LITE - FIXED	3
8	2'-6" X 2'-6"	SELECTION BY THE DEVELOPER	100%	1 LITE - FIXED - TEMPERED	2
9	2'-6" X 2'-6"	SELECTION BY THE DEVELOPER	00%	1 LITE - FIXED - TEMPERED	1
10	8'-6" X 6'-0"	SELECTION BY THE DEVELOPER	33%	2 LITE - SLIDER	1
11	6'-0" X 6'-0"	SELECTION BY THE DEVELOPER	50%	2 LITE - SLIDER	1

FLOOR PLAN "A" - DOORS:

SYM.	SIZE	DESCRIPTION (NOTE: DOORS AS SPECIFIED ARE FOR BID PURPOSES ONLY. ACTUAL DOOR SELECTION IS TO BE DIRECTED BY THE DEVELOPER.)	THK	REMARKS	QTY.	JAMB
A	3'-0" X 8'-0"	DEVELOPER SELECTED - TEMPERED GLASS METAL FRONT ENTRY DOOR	1 3/4"	TEMPERED GLASS FRONT ENTRY	1	6" JAMB
B	3'-0" X 8'-0"	SELECTION BY THE DEVELOPER	1 3/4"	20 MIN. RATED W/ SELF-CLOSING HINGE	1	6" JAMB
C	2'-8" X 8'-0"	SELECTION BY THE DEVELOPER	1 3/8"		1	4" JAMB
D	2'-6" X 8'-0"	SELECTION BY THE DEVELOPER	1 3/8"		3	4" JAMB
E	2'-4" X 8'-0"	SELECTION BY THE DEVELOPER	1 3/8"		2	4" JAMB
F	2'-6" X 8'-0" [PAIR]	SELECTION BY THE DEVELOPER	1 3/4"	CLOSET BY PASS DOORS	1 PAIR	4" JAMB
G	3'-0" X 8'-0" [PAIR]	SELECTION BY THE DEVELOPER	1 3/8"	CLOSET BY PASS DOORS	1 PAIR	4" JAMB
H	8'-0" X 8'-0"	CLOPAY [OR EQUAL] TEMPERED	N/A	SECTIONAL OVERHEAD GARAGE DOOR (TEMP.)	1	4" JAMB
J	2'-4" X 6'-8"	SELECTION BY THE DEVELOPER	1 3/8"		2	4" JAMB

FLOOR PLAN "B" - DOORS:

SYM.	SIZE	DESCRIPTION (NOTE: DOORS AS SPECIFIED ARE FOR BID PURPOSES ONLY. ACTUAL DOOR SELECTION IS TO BE DIRECTED BY THE DEVELOPER.)	THK	REMARKS	QTY.	JAMB
A	3'-0" X 8'-0"	DEVELOPER SELECTED - TEMPERED GLASS METAL FRONT ENTRY DOOR	1 3/4"	TEMPERED GLASS FRONT ENTRY	1	6" JAMB
B	3'-0" X 8'-0"	SELECTION BY THE DEVELOPER	1 3/4"	20 MIN. RATED W/ SELF-CLOSING HINGE	1	6" JAMB
C	2'-6" X 8'-0"	SELECTION BY THE DEVELOPER	1 3/8"	TEMPERED - 1 LITE	1	6" JAMB
D	2'-6" X 5'-8" [PAIR] SIZED FOR STAIR WELL	SELECTION BY THE DEVELOPER	1 3/8"	OPEN LOUVERED @ LAUNDRY CLOSET / CUSTOM HEIGHT TO ADDRESS STAIR WELL CLEARANCE	1 PAIR	4" JAMB
E	2'-6" X 8'-0"	SELECTION BY THE DEVELOPER	1 3/8"		3	4" JAMB
F	2'-4" X 8'-0"	SELECTION BY THE DEVELOPER	1 3/4"		7	4" JAMB
G	2'-6" X 8'-0" [PAIR]	SELECTION BY THE DEVELOPER	1 3/8"	CLOSET BY PASS DOORS	1 PAIR	4" JAMB
H	3'-0" X 8'-0" [PAIR]	SELECTION BY THE DEVELOPER	1 3/8"	CLOSET BY PASS DOORS	1 PAIR	4" JAMB
I	2'-6" X 8'-0"	SELECTION BY THE DEVELOPER	1 3/4"	TEMPERED GLASS FRENCH DOOR - 1 LITE	1	6" JAMB
J	8'-0" X 8'-0"	CLOPAY [OR EQUAL] TEMPERED	N/A	SECTIONAL OVERHEAD GARAGE DOOR (TEMP.)	1	6" JAMB
K	2'-4" X 3'-0" SIZED FOR STAIR WELL	SELECTION BY THE DEVELOPER	1 3/4"	CUSTOM DOOR HEIGHT TO ADDRESS STAIR WELL CLEARANCE	1	4" JAMB

FLOOR PLAN "A" (A.D.A. UNIT) - DOORS

SYM.	SIZE	DESCRIPTION (NOTE: DOORS AS SPECIFIED ARE FOR BID PURPOSES ONLY. ACTUAL DOOR SELECTION IS TO BE DIRECTED BY THE DEVELOPER.)	THK	REMARKS	QTY.	JAMB
A	3'-0" X 8'-0"	DEVELOPER SELECTED - TEMPERED GLASS METAL FRONT ENTRY DOOR	1 3/4"	TEMPERED GLASS FRONT ENTRY	1	6" JAMB
B	3'-0" X 8'-0"	SELECTION BY THE DEVELOPER	1 3/4"	20 MIN. RATED W/ SELF-CLOSING HINGE	1	6" JAMB
C	2'-8" X 8'-0"	SELECTION BY THE DEVELOPER	1 3/8"		1	4" JAMB
D	2'-6" X 8'-0"	SELECTION BY THE DEVELOPER	1 3/8"		3	4" JAMB
E	2'-4" X 8'-0"	SELECTION BY THE DEVELOPER	1 3/8"		4	4" JAMB
F	2'-6" X 8'-0" [PAIR]	SELECTION BY THE DEVELOPER	1 3/4"	CLOSET BY PASS DOORS	1 PAIR	4" JAMB
G	3'-0" X 8'-0" [PAIR]	SELECTION BY THE DEVELOPER	1 3/8"	CLOSET BY PASS DOORS	1 PAIR	4" JAMB
H	8'-0" X 8'-0"	CLOPAY [OR EQUAL] TEMPERED	N/A	SECTIONAL OVERHEAD GARAGE DOOR (TEMP.)	1	4" JAMB
I	3'-0" X 8'-0"	SELECTION BY THE DEVELOPER	1 3/8"		1	4" JAMB

DOOR & WINDOW GENERAL NOTES:

DOOR GENERAL NOTES:

FIRE DOORS: ALL EXTERIOR ACCESS DOORS SHALL COMPLY WITH I.C.B. AND LOCAL CODES FOR EXTERIOR DOOR ASSEMBLIES.

A. THE EXTERIOR SURFACE OR CLADDING SHALL BE OF NON-COMBUSTIBLE OR IGNITION RESISTANT MATERIAL.
B. SHALL BE CONSTRUCTED OF SOLID CORE WOOD THAT COMPLY WITH THE FOLLOWING REQUIREMENTS:
   i. STILES AND RAILS SHALL NOT BE LESS THAN 1 3/8 INCHES THICK.
   ii. RAISED PANELS SHALL NOT BE LESS THEN 1 1/4 INCHES THICK, EXCEPT FOR THE EXTERIOR PERIMETER OF THE RAISED PANEL THAT MAY TAPER TO A TONGUE NOT LESS THEN 3/8 INCH THICK.
C. SHALL HAVE A FIRE-RESISTANCE RATING OF NOT LESS THAN 30 MINUTES WHEN TESTED ACCORDING TO NFPA 252.
D. SHALL BE TESTED TO MEET THE PERFORMANCE REQUIREMENTS OF SFM STANDARD 12-8A-1
   ALL INTERIOR AND EXTERIOR DOORS ARE TO BE PRE-HUNG AND READY FOR DOOR HARDWARE. ALL DOOR CASINGS ARE TO BE SUPPLIED BY THE DOOR MANUFACTURE AND ARE TO BE PRIMNED AND READY FOR PAINT.

1. ALL EXTERIOR SWINGING DOORS AND GARAGE / HOUSE COMMON DOORS SHALL HAVE THE FOLLOWING:
   A. DOOR JAMBS SHALL HAVE SOLID BACKING WITH NO VOIDS BETWEEN THE STRIKE SIDE OF THE JAMB AND THE FRAME OPENING WITH A VERTICAL DISTANCE OF 6 INCHES.
   B. DOORS SHALL BE EQUIPPED WITH A SINGLE CYLINDER DEAD BOLT LOCK.
2. ALL DOORS ARE TO BE PRE-HUNG & DRILLED TO ACCEPT DOOR HARDWARE.
3. ALL DOOR THRESHOLDS ARE TO BE BRONZE ANODIZED ALUMINUM (UNLESS OTHER WISE NOTED) HANDICAP ACCESSABLE (OPTIONAL STAIN GRADE OAK OR MAPLE ENTRY DOOR THRESHOLD). - PEMPKO OR EQUAL.
4. ALL BY-PASS CLOSET DOORS ARE TO BE SET W/ KENNA-FRAME BY-PASS CLOSED DOOR FRAMES - SIZED TO WEIGHT. (SEE MANUFACTURE SPECIFICATIONS).
5. ALL DOORS ARE TO BE FITTED W/ PEMPKO (OR EQUAL) DOOR SHOES AND WEATHER STRIPPLING.
6. ONE-HOUR OCCUPANCY SEPERATION BETWEEN THE HOUSE AND GARAGE, THE DOOR MUST BE SELF-CLOSING, TIGHT-FITTING SOLID WOOD DOOR 2 INCH IN THICKNESS, OR SELF-CLOSING, TIGHT FITTING DOOR HAVING A FIRE-PROTECTION RATING OF NOT LESS THEN 20 MINUTES.
7. ALL EXIT DOORS SHALL BE OPENABLE FROM THE INSIDE WITHOUT THE USE OF A KEY OR ANY SPECIAL KNOWLEDGE OR EFFORT.
8. NOTE IF THE EGRESS WINDOWS ARE SET WITH A DUEL LATCH. THE LATCHES SHALL BE INNER-CONNECTED AND THE LATCHES UNLOCKED BY A SINGLE MOTION FROM THE LOWEST OPENING AND CLOSING DEVICE.
9. FLOOR ELEVATION, THERE SHALL BE A FLOOR OR LANDING ON EACH SIDE OF A DOOR. SUCH FLOOR OR LANDING SHALL BE LEVEL EXCEPT FOR THE EXTERIOR LANDINGS, WHICH ARE PERMITTED TO HAS A SLOPE TO NOT EXCEED 0.25 VERTICAL INCHES HORIZONTAL. LANDINGS ARE TO BE LEVEL WITH LANDING ELEVATION DIFFERENCE AT 7.50" MAXIMUM (0.75 MAXIMU DOOR SWINGS OVER THE LANDING.
10. SWINGING DOR OR GATE SURFACES WITHIN 10 INCHES OF THE FINISH FLOOR OR GROUND MEASURED VERTICALLY SHALL HAVE A SMOOTH SURFACE ON THE PUSH SIDE EXTENDING THE FULL WIDTH OF THE DOOR OR GATE. PARTS CREATING HORIZONTAL OR VERTICAL JOINTS IN THESE SURFACES SHALL BE WITHIN 1/16 INCH OF THE SAME PLANE AS THE OTHER AND BE FREE OF SHARP OR ABRASIVE EDGES. CAVITIES CREATED BY ADDED KICK PLATES SHALL BE CAPPED. [1132A.9 C.B.C.]
11. EVERY PRIMARY ENTRANCE TO A COVERED MULTI-FAMILY DWELLING UNIT SHALL BE PROVIDED WITH A DOOR BUZZER, BELL, CHIME OR EQUIVALENT. THE ACTIVATING MECHANISM SHALL BE MOUNTED A MAXIMUM OF 48 INCHES ABOVE THE FLOOR AND CONNECTED TO PERMANENT WIRING [1132A.10 C.B.C.]

EXCEPTIONS:

1. DOORS SERVING INDIVIDUAL DWELLING UNITS IN GROUP R.2 AND R.3 WHERE THE FOLLOWING APPLY:
   A.) A DOOR IS PERMITTED TO OPEN AT THE TOP STEP OF AN INTERIOR FLIGHT OF STAIRS PROVIDED THE DOOR DOES NOT SWING OVER THE TOP STEP.
   B.) SCREEN DOORS AND STORM DOORS ARE PERMITTED TO SWING OVER STAIRS OR LANDINGS.
2. EXTERIOR DOORS AS PROVIDED FOR AND WHICH ARE NOT ON THE ACCESSABLE ROUTE.
3. IN GROUP R.3 OCCUPANCIES NOT REQUIRED TO BE ADAPTABLE OR ACCESSIBLE, THE LANDING AT THE EXTERIOR DOORWAY SHALL NOT BE MORE THAN 7.75 INCHES [197 MM] BELOW THE TOP OF THE THRESHOLD, PROVIDED THE DOOR, OTHER THAN AN EXTERIOR STORM OR SCREEN DOOR DOES NOT SWING OVER THE LANDING.
4. VARIATIONS IN ELEVATIONS DUE TO DIFFERENCES IN FINISH MATERIALS, BUT NOT MORE THAN 0.5 INCH [12.7MM].

WINDOW GENERAL NOTES:

PROVIDE SAFETY GLAZING IN THE FOLLOWING HAZARDOUS LOCATIONS SUBJECT TO HUMAN IMPACT:

A.) GLAZING IN SHOWER AND BATHTUB DOORS AND ENCLOSURES.
B.) GLAZING IN ANY PORTION OF A BUILDING WALL ENCLOSING COMPARTMENTS FOR HOT TUBS, WHIRLPOOLS, SAUNAS, STEAM ROOMS, BATHTUBS AND SHOWERS THE BOTTOM EXPOSED EDGE OF GLAZING IS LESS THAN 60 INCHES ABOVE A STANDING SURFACE AND DRAIN INLET. EDGE OF GLAZING IS LESS THAN 60 INCHES ABOVE A STANDING SURFACE AND DRAIN INLET.
C.) GLAZING IN FIXED OR OPERABLE PANELS ADJACENT TO A DOOR WHERE THE NEAREST EXPOSED EDGE OF THE GLAZING IS WITHIN A 24 INCH ARC OF EITHER VERTICAL EDGE OF THE DOOR IN A CLOSED POSITION AND WHERE THE BOTTOM EXPOSED EDGE OF THE GLAZING IS LESS THAN 60 INCHES ABOVE THE WALKING SURFACE.
D.) OTHER GLAZING THAT MEETS ALL OF THE FOLLOWING CONDITIONS:
   EXPOSED AREA OF AN INDIVIDUAL PANE GREATER THAN 9 SQUARE FEET, EXPOSED BOTTOM EDGE LESS THAN 18 INCHES ABOVE THE FLOOR, EXPOSED TOP EDGE GREATER THAN 36 INCHES ABOVE THE FLOOR, ONE OR MORE WALKING SURFACES WITHIN 36 INCHES HORIZONTALLY OF THE PLANE OF THE GLAZING.

EXTERIOR WINDOW COLOR FINISH IS TO BE SELECTED BY THE HOME OWNER. THE GENERAL CONTRACTOR IN CONJUNCTION WITH BOTH THE HOME OWNER AND THE WINDOW PROVIDER IS TO VERIFY ALL EXTERIOR WINDOW COLORS AND CONSTRUCTION MATERIALS WITH THE HOME OWNER PRIOR TO THE ORDERING AND WINDOW INSTALLATION.

EXTERIOR WINDOWS AND EXTERIOR GLAZED DOOR ASSEMBLIES:

EVERY SLEEPING ROOM SHALL BE PROVIDED WITH AN EMERGENCY EGRESS WINDOW OR DOOR AS LISTED BELOW:

A.) MINIMUM NET CLEAR OPENING OF 5.7 SQUARE FEET.
B.) MINIMUM NET CLEAR OPENING HEIGHT OF 24 INCHES.
C.) MINIMUM NET CLEAR OPENING WIDTH OF 20 INCHES.
D.) A FINISHED WINDOW HEIGHT OF 44 INCHES MAXIMUM FROM WINDOW SILL GLAZING TO COMMON FINISH FLOOR.

Door & Window Elevations: /1

Floor Plans "A" & A.D.A - Door & Window Elevations:

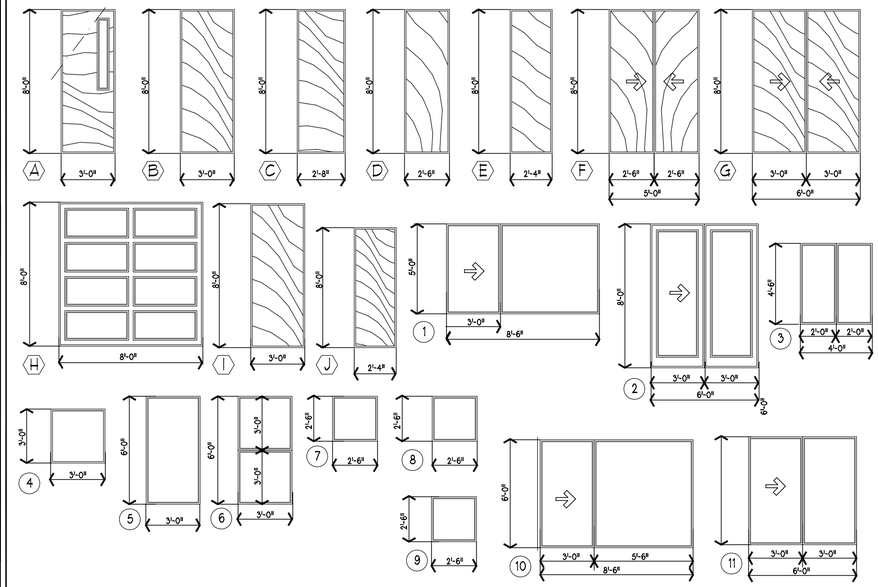

Floor Plan "B" - Door & Window Elevations:

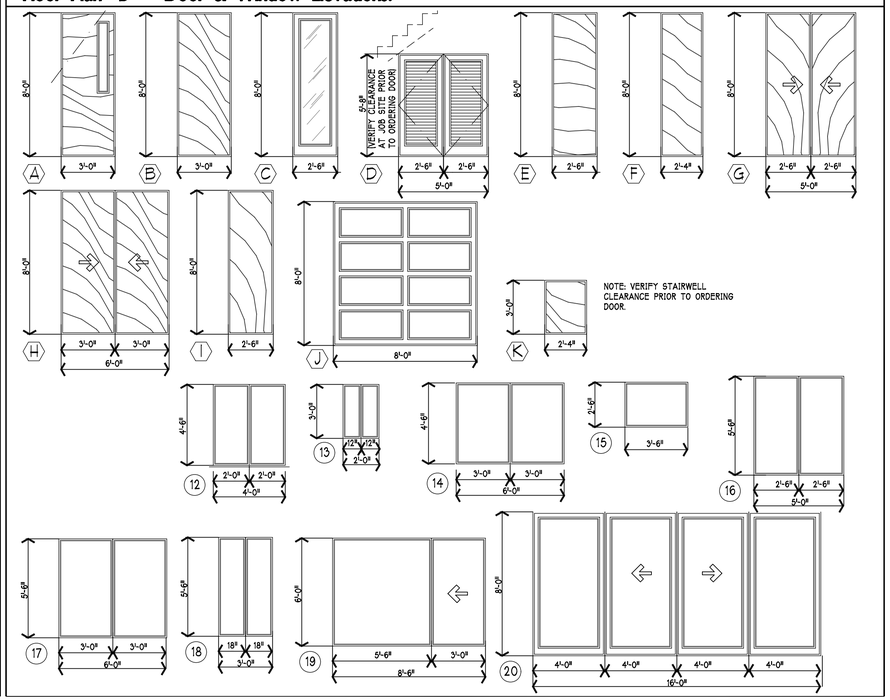

THESE DRAWINGS ARE THE PROPERTY OF OSITO HOLDINGS, LLC AND ARE INTENDED FOR USE SOLELY ON THE PROJECT TITLED HEREON. THESE DRAWINGS AS PROTECTED UNDER COPYRIGHT LAWS ARE NOT TO BE REPRODUCED IN WHOLE OR PART IN ANY MANNER WITHOUT THE EXPRESSED WRITTEN CONSENT OF THE DESIGNER. USE OF THESE DRAWINGS IS LIMITED TO THE SITE INTENDED AND THEIR USE AT ANY OTHER SITE, OR ON OTHER PROJECTS IS PROHIBITED EXCEPT BY PRIOR WRITTEN CONSENT OF THE DESIGNER. ALL REPRODUCTINS OF THESE DRAWINGS, IN WHOLE OR PART, REMAIN UNDER THE OWNERSHIP OF THE DESIGNER AND SHALL BE RETURNED UPON COMPLETION OF THE PROJECT OR UPON REQUEST OF THE DESIGNER.

COPYRIGHT © 2020

OWNER / DEVELOPER:

OSITO HOLDINGS, LLC
P.O. BOX 2827
MESA, AZ 85214.
(480) 646.6323

PROJECT:

TENNANT SQUARE
215 TENNANT AVENUE
MORGAN HILL, CA.
COUNTY OF
SANTA CLARA

DRAWING:

DOOR & WINDOW SCHEDULES AND NOTES

LICENSED ARCHITECT
ZUISHUANG CHEN
NO. C-28156
REN. 5/31/25
STATE OF CALIFORNIA

REVISIONS:
/1 03.22.2023 PLAN CHECK RESPONSE

DATE: JUNE 03, 2024
SCALE: AS NOTED
DRAWN BY: G.E.MOORE
PROJ. MGR. G.E.MOORE
PROJECT FILE: 0.20-TENNANT
DRAWING: T.2

△1 ROOM FINISH SCHEDULES:

unit "A" plan finish schedule:

ROOM	FLOOR FINISH							BASE BOARD					WALL FINISH				CEILING FINISH				CEILING TYPE								CEIL'G HGT.
	CARPET W/ PAD	NON-SLIP FLOORING TILE W/ BUTT GROUT JOINT (SELECT BY OWNER)	RANDOM WIDTH AND LENGTH RED OAK W/ CHERRY SEMI-TRANSPARENT STAIN & MIN. OF 3 COAT CLEAR VARATHANE PROTECTIVE COATING FINISH	SEALED CONCRETE DECK	VINYL STRIP FLOORING W/ SIMULATED WOOD PLAN FINISH	SEALED EXPOSED PLYWOOD SUB-FLOOR		KELLEHER "VINTAGE" BASE - MDF BASE BOARD W/ PAINT FINISH (MDF28A)	COVED SH. VIN.	M.D.F. (OR EQUAL) BASE BOARD W/ PAINT FINISH	4" TILE SET IN MASTIC	KELLEHER CORONADO BASE "ALDER" W/ STAIN FINISH (ALD-221)	1/2" GYP. WALL BOARD W/ TAPE & TROWEL TEXT. FINISH	1/2" GYP. WALL BOARD W/ SMOOTH TAPE & TEXT FINISH - WASHABLE	5/8" TYPE "X" GYP. WALLBD. W/ TAPE & TROWEL TEXT. FINISH	5/8" TYPE "X" GYP. WALLBD. W/ SMOOTH TAPE / WASHABLE FINISH	1/2" GYP. WALL BOARD W/ TAPE & TROWEL TEXT. FINISH	1/2" GYP. WALL BOARD W/ TAPE & TROWEL STIPPLE FINISH	5/8" TYPE "X" GYP. WALLBD. W/ TAPE & TROWEL TEXT. FINISH	5/8" TYPE "X" GYP. WALLBD. W/ SMOOTH TAPE / WASHABLE FINISH	"FLAT" FINISH CEILING W/ NO CROWN MOULDING	"FLAT" CEILING W/ 1 PIECE CROWN MOULDING	"FLAT" CEILING W/ 2 PIECE CROWN MOULDING	"FLAT" CEILING W/ 3 PIECE CROWN MOULDING	RADIUS CEILING W/ GYP. BOARD FINISH	EXPOSED BOX BEAM EQUALLY SPACED IN EACH DIRECTION W/ GYP. BOARD CEILING FINISH	EXPOSED EQUALLY SPACED CEIL. BEAMS W/ EXPOSED CEILING DECK	EXPOSED EQUALLY SPACED CEIL. BEAMS W/ GYP. BOARD CEILING	
1ST FLOOR:																													
ENTRY			●					●					●				●				●								9'-0"
ENTRY HALL			●					●					●				●				●								9'-0"
POWDER ROOM (1/2 BATH)		●						●						●			●				●								9'-0"
GREAT ROOM			●					●					●				●				●								8'-0"
KITCHEN			●					●						●				●			●								9'-0"
1 CAR GARAGE				●				●								●	●				●								9'-0"
ENTRY CLOSET @ STAIR			●					●							●		●				●								8'-0"
2ND FLOOR:																													
STAIR WELL			●					●							●			●			●								9'-0"
STAIR LANDING	●							●					●				●				●								10'-0"
HALLWAY	●							●					●				●				●								10'-0"
LAUNDRY CLOSET		●						●						●				●			●								10'-0"
MASTER BEDROOM	●							●					●				●				●								9'-0"
MASTER BEDROOM CLST.	●							●					●				●				●								9'-0"
MASTER BATHROOM	●							●						●				●			●								20'-0"
TOILET CLOSET		●						●						●				●			●								20'-0"
BEDROOM #2	●							●					●				●				●								9'-0"
BEDROOM #2 CLOSET	●							●					●				●				●								9'-0"
BEDROOM #3	●							●					●				●				●								9'-0"
BEDROOM #3 CLOSET	●							●					●				●				●								9'-0"
BATHROOM #2		●						●						●				●			●								9'-0"

unit "B" plan finish schedule:

ROOM	FLOOR FINISH							BASE BOARD					WALL FINISH				CEILING FINISH				CEILING TYPE								CEIL'G HGT.
1ST FLOOR:	CARPET W/ PAD	NON-SLIP FLOORING TILE W/ BUTT GROUT JOINT (SELECT BY OWNER)	RANDOM WIDTH AND LENGTH RED OAK W/ CHERRY SEMI-TRANSPARENT STAIN & MIN. OF 3 COAT CLEAR VARATHANE PROTECTIVE COATING FINISH	SEALED CONCRETE DECK	VINYL STRIP FLOORING W/ SIMULATED WOOD PLAN FINISH	SEALED EXPOSED PLYWOOD SUB-FLOOR		KELLEHER "VINTAGE" BASE - MDF BASE BOARD W/ PAINT FINISH (MDF28A)	COVED SH. VIN.	M.D.F. (OR EQUAL) BASE BOARD W/ PAINT FINISH	4" TILE SET IN MASTIC	KELLEHER CORONADO BASE "ALDER" W/ STAIN FINISH (ALD-221)	1/2" GYP. WALL BOARD W/ TAPE & TROWEL TEXT. FINISH	1/2" GYP. WALL BOARD W/ SMOOTH TAPE & TEXT FINISH - WASHABLE	5/8" TYPE "X" GYP. WALLBD. W/ TAPE & TROWEL TEXT. FINISH	5/8" TYPE "X" GYP. WALLBD. W/ SMOOTH TAPE / WASHABLE FINISH	1/2" GYP. WALL BOARD W/ TAPE & TROWEL TEXT. FINISH	1/2" GYP. WALL BOARD W/ TAPE & TROWEL STIPPLE FINISH	5/8" TYPE "X" GYP. WALLBD. W/ TAPE & TROWEL TEXT. FINISH	5/8" TYPE "X" GYP. WALLBD. W/ SMOOTH TAPE / WASHABLE FINISH	"FLAT" FINISH CEILING W/ NO CROWN MOULDING	"FLAT" CEILING W/ 1 PIECE CROWN MOULDING	"FLAT" CEILING W/ 2 PIECE CROWN MOULDING	"FLAT" CEILING W/ 3 PIECE CROWN MOULDING	RADIUS CEILING W/ GYP. BOARD FINISH	EXPOSED BOX BEAM EQUALLY SPACED IN EACH DIRECTION W/ GYP. BOARD CEILING FINISH	EXPOSED EQUALLY SPACED CEIL. BEAMS W/ EXPOSED CEILING DECK	EXPOSED EQUALLY SPACED CEIL. BEAMS W/ GYP. BOARD CEILING	
GARAGE				●												●				●	●								
ENTRY			●					●					●				●				●								24'-0"
ENTRY HALL			●					●					●				●				●								14'-0" AT CROWN
STAIR WELL			●					●							●				●		●								9'-0" AT CROWN
HALLWAY			●					●					●				●				●								8'-0"
LAUNDRY CLOSET		●						●						●				●			●								9'-0"
ENTRY CLOSET			●					●					●				●				●								9'-0"
BEDROOM #2	●							●					●				●				●								8'-0"
BEDROOM #2 CLOSET	●							●					●				●				●								8'-0"
BEDROOM #3	●							●					●				●				●								9'-0"
BEDROOM #3 CLOSET	●							●					●				●				●								10'-0"
BATHROOM #2		●						●						●				●			●								10'-0"
2ND FLOOR																													
DINING ROOM			●					●						●				●			●								9'-0"
GREAT ROOM			●					●						●				●			●								9'-0"
KITCHEN			●					●					●				●												20'-0"
1/2 BATHROOM		●						●						●				●											20'-0"
MASTER BEDROOM	●							●						●				●			●								9'-0"
MASTER BEDRM. CLST. #1	●							●						●				●			●								9'-0"
MASTER BEDRM. CLST. #2	●							●						●				●			●								9'-0"
MASTER BATHROOM	●							●						●				●			●								9'-0"
TOILET CLOSET		●						●					●				●				●								9'-0"

unit "A" – A.D.A. – plan finish schedule:

ROOM	FLOOR FINISH							BASE BOARD					WALL FINISH				CEILING FINISH				CEILING TYPE								CEIL'G HGT.
	CARPET W/ PAD	NON-SLIP FLOORING TILE W/ BUTT GROUT JOINT (SELECT BY OWNER)	RANDOM WIDTH AND LENGTH RED OAK W/ CHERRY SEMI-TRANSPARENT STAIN & MIN. OF 3 COAT CLEAR VARATHANE PROTECTIVE COATING FINISH	SEALED CONCRETE DECK	VINYL STRIP FLOORING W/ SIMULATED WOOD PLAN FINISH	SEALED EXPOSED PLYWOOD SUB-FLOOR		KELLEHER "VINTAGE" BASE - MDF BASE BOARD W/ PAINT FINISH (MDF28A)	COVED SH. VIN.	M.D.F. (OR EQUAL) BASE BOARD W/ PAINT FINISH	4" TILE SET IN MASTIC	KELLEHER CORONADO BASE "ALDER" W/ STAIN FINISH (ALD-221)	1/2" GYP. WALL BOARD W/ TAPE & TROWEL TEXT. FINISH	1/2" GYP. WALL BOARD W/ SMOOTH TAPE & TEXT FINISH - WASHABLE	5/8" TYPE "X" GYP. WALLBD. W/ TAPE & TROWEL TEXT. FINISH	5/8" TYPE "X" GYP. WALLBD. W/ SMOOTH TAPE / WASHABLE FINISH	1/2" GYP. WALL BOARD W/ TAPE & TROWEL TEXT. FINISH	1/2" GYP. WALL BOARD W/ TAPE & TROWEL STIPPLE FINISH	5/8" TYPE "X" GYP. WALLBD. W/ TAPE & TROWEL TEXT. FINISH	5/8" TYPE "X" GYP. WALLBD. W/ SMOOTH TAPE / WASHABLE FINISH	"FLAT" FINISH CEILING W/ NO CROWN MOULDING	"FLAT" CEILING W/ 1 PIECE CROWN MOULDING	"FLAT" CEILING W/ 2 PIECE CROWN MOULDING	"FLAT" CEILING W/ 3 PIECE CROWN MOULDING	RADIUS CEILING W/ GYP. BOARD FINISH	EXPOSED BOX BEAM EQUALLY SPACED IN EACH DIRECTION W/ GYP. BOARD CEILING FINISH	EXPOSED EQUALLY SPACED CEIL. BEAMS W/ EXPOSED CEILING DECK	EXPOSED EQUALLY SPACED CEIL. BEAMS W/ GYP. BOARD CEILING	
1ST FLOOR:																													
ENTRY			●					●					●				●				●								24'-0"
POWDER ROOM (1/2 BATH)		●						●						●				●			●								14'-0" AT CROWN
GREAT ROOM			●					●					●				●				●								9'-0" AT CROWN
KITCHEN			●					●						●				●			●								8'-0"
1 CAR GARAGE				●												●				●	●								9'-0"
STAIR WELL			●					●								●				●	●								9'-0"
2ND FLOOR:																													
STAIR LANDING	●							●					●				●				●								8'-0"
HALLWAY	●							●					●				●				●								9'-0"
LAUNDRY CLOSET		●						●						●				●			●								10'-0"
MASTER BEDROOM	●							●					●				●				●								10'-0"
MASTER BEDROOM CLST.	●							●					●				●				●								10'-0"
MASTER BATHROOM	●							●						●				●			●								9'-0"
TOILET CLOSET		●						●						●				●			●								9'-0"
BEDROOM #2	●							●					●				●				●								20'-0"
BEDROOM #2 CLOSET	●							●					●				●				●								20'-0"
BEDROOM #3	●							●					●				●				●								9'-0"
BEDROOM #3 CLOSET	●							●					●				●				●								9'-0"
BATHROOM #2		●						●						●				●			●								9'-0"

"not used"

ROOM	FLOOR FINISH							BASE BOARD					WALL FINISH				CEILING FINISH				CEILING TYPE								CEIL'G HGT.
	CARPET W/ PAD	NON-SLIP FLOORING TILE W/ BUTT GROUT JOINT (SELECT BY OWNER)	RANDOM WIDTH AND LENGTH RED OAK W/ CHERRY SEMI-TRANSPARENT STAIN & MIN. OF 3 COAT CLEAR VARATHANE PROTECTIVE COATING FINISH	SEALED CONCRETE DECK	VINYL STRIP FLOORING W/ SIMULATED WOOD PLAN FINISH	SEALED EXPOSED PLYWOOD SUB-FLOOR		KELLEHER "VINTAGE" BASE - MDF BASE BOARD W/ PAINT FINISH (MDF28A)	COVED SH. VIN.	M.D.F. (OR EQUAL) BASE BOARD W/ PAINT FINISH	4" TILE SET IN MASTIC	KELLEHER CORONADO BASE "ALDER" W/ STAIN FINISH (ALD-221)	1/2" GYP. WALL BOARD W/ TAPE & TROWEL TEXT. FINISH	1/2" GYP. WALL BOARD W/ SMOOTH TAPE & TEXT FINISH - WASHABLE	5/8" TYPE "X" GYP. WALLBD. W/ TAPE & TROWEL TEXT. FINISH	5/8" TYPE "X" GYP. WALLBD. W/ SMOOTH TAPE / WASHABLE FINISH	1/2" GYP. WALL BOARD W/ TAPE & TROWEL TEXT. FINISH	1/2" GYP. WALL BOARD W/ TAPE & TROWEL STIPPLE FINISH	5/8" TYPE "X" GYP. WALLBD. W/ TAPE & TROWEL TEXT. FINISH	5/8" TYPE "X" GYP. WALLBD. W/ SMOOTH TAPE / WASHABLE FINISH	"FLAT" FINISH CEILING W/ NO CROWN MOULDING	"FLAT" CEILING W/ 1 PIECE CROWN MOULDING	"FLAT" CEILING W/ 2 PIECE CROWN MOULDING	"FLAT" CEILING W/ 3 PIECE CROWN MOULDING	RADIUS CEILING W/ GYP. BOARD FINISH	EXPOSED BOX BEAM EQUALLY SPACED IN EACH DIRECTION W/ GYP. BOARD CEILING FINISH	EXPOSED EQUALLY SPACED CEIL. BEAMS W/ EXPOSED CEILING DECK	EXPOSED EQUALLY SPACED CEIL. BEAMS W/ GYP. BOARD CEILING	

General Notes and Conditions:

1. ALL DIMENSIONS ARE TO FACE OF STUD, FACE OF MASONRY, CENTERLINE OF COLUMN OR OTHER GRID POINT, AND CENTERLINE OF THE DOOR OR OTHER SCHEDULED OPENING UNLESS OTHERWISE NOTED.
2. COORDINATION:
   A. THE CONTACTOR SHALL COORDINATE LAYOUT DIMENSIONS INDICATED ON THE CONSULTANTS DRAWINGS WITH THOSE INDICATED ON THE WORKING DRAWINGS. ALL DISCREPANCIES SHALL BE REPORTED TO THE DESIGNER BEFORE PROCEEDING WITH THE WORK.
   B. SEE WORKING DRAWINGS FORLAYOUT DIMENSIONS, ELEVATIONS, DEPRESSIONS IN SLAB, OPENINGS IN WALLS AND ROOF, ROOF SLOPES, CRICKETS AND ROOF DRAINS.
   C. IN THE EVENT CERTAIN FEATURES OF THE CONSTRUCTION ARE NOT FULLY SHOWN ON THE CONSTRUCTION DOCUMENTS, THEN THEIR CONSTRUCTION SHALL BE OF THE SAME CHARACTER AS PER SIMULAR CONDITIONS THAT ARE SHOWN.
   D. THE CONTRACTOR SHALL VERIFY ALL ELECTRICAL, MECHANICAL, TELEPHONE AND SECURITY REQUIREMENTS BEFORE CONSTRUCTION BEGINS.
   D. THE CONTRACTOR SHALL VERIFY ALL ELECTRICAL, MECHANICAL, TELEPHONE AND SECURITY REQUIREMENTS BEFORE CONSTRUCTION BEGINS.
   E. THE CONTRACTOR SHALL COORDINATE THE LOCATIONS OF LIGHTS, AIR OUTLET AND INLET REGISTERS, FIRE SPRINKLER HEADS, SMOKE DETECTORS, ET.AL. AS MAY BE REQUIRED PRIOR TO THE COMMENCEMENT OF ANY AND ALL CONSTRUCTION.
3. ALL DIMENSIONS, ELEVATIONS AND EXISTING CONDITIONS SHALL BE CHECKED AND VERIFIED ON THE PROJECT SITE BY THE CONTRACTOR AND EACH TRADE BEFORE WORK BEGINS. ERRORS, QUESTIONS AND DISCREPANCIES SHALL BE BROUGHT TO THE DESIGNERS ATTENTION BEFORE CONSTRUCTION BEGINS.
4. ALL ITEMS ARE NEW UNLESS SPECIFICALLY INDICATED OR NOTED AS EXISTING.
5. THE CONTRACTOR SHALL VERIFY ALL EXISTING CONDITIONS AND NOTIFY THE PROJECT ARCHITECT OF ALL EXCEPTIONS. PRIOR TO PROCEEDING WITH THE WORK.
6. GRADING PLANS, DRAINAGE IMPROVEMENTS, ROAD AND ACCESS REQUIREMENTS AND ENVIRONMENTAL HEALTH CONSIDERATIONS SHALL COMPLY WITH LOCAL ORDINANCES.
7. THE CONTRACTOR SHALL ASSUME SOLE & COMPLETE RESPONSIBILITY FOR JOB SITE CONDITIONS & COMPLY WITH SAFETY, REGULATIONS AND RESTRICTIONS AS REQUIRED FOR WORKER AND PEDESTRIAN PROTECTION DURING THE COURSE OF CONSTRUCTION OF THIS PROJECT. THE CONTRACTOR SHALL PROVIDE TO THE OWNER AND PROJECT DESIGNER A LOCATION MAP SHOWING STAGING ARE FOR MATERIALS AND EQUIPMENT. (ONLY AS REQUIRED)
8. ALL SHOP WELDING IS TO BE DONE IN A CERTIFIED, LICENSED SHOP. ALL FIELD WELDING SHALL BE DONE ONLY BY A LICENSED WELDER.
9. ALL WORK SHALL BE PERFORMED IN CONFORMANCE WITH ALL LOCAL, COUNTY, STANTE AND FEDERAL CODES, LAWS, ORDINANCES AND REGULATIONS APPLICABLE. NOTHING IN THE CONTRACT DOCUMENTS IS TO BE CONSTRUED TO PERMIT WORK NOT CONFORMING TO THESE CODES, LAWS, ORDINANCES AND REQULATIONS.
10. PENETRATIONS GREATER THAN 4" DIA. THROUGH RATED WALLS AND FLOORS SHALL BE PROTECTED PER C.R.C. SECT. R302.5. DWELLING/GARAGE SEPERATION SHALL BE PROVIDED PER C.R.C. TABLE R302.5.
11. STRUCTURAL MEMBERS SHALL BE PROTECTED AS REQUIRED BY C.R.C. TABLE R.302.1(1) & R.302.1(2). FOR FIRE CONSTRUCTION.
12. THE LOCAL FIRE AUTHORITY SHALL BE CONSULTED IN REGARDS TO FIRE PROTECTION DURING CONSTRUCTION AND STORAGE OF CONSTRUCTION MATERIALS.
13. SEPERATE PLAN REVIEW AND PERMIT ARE REQUIRED FOR MANUFACTURED ROOF TRUSSES. SEE STRUCTURAL DRAWINGS FOR ADDITIONAL INFORMATION.
14. ALL WRITTEN DIMENSIONS SHALL TAKE PRECEDENCE OVER SCALED DIMENSIONS. ANY DISCREPANCIES SHALL BE BROUGHT TO THE ATTENTION OF GARY MOORE & ASSOCIATES PRIOR TO COMMENCEMENT OF ANY AND ALL WORK.
15. ANY AND ALL TRUSS DESIGN, CALCS. AND SHOP DRAWINGS ARE TO BE "DEFERRED" SUBMITTAL AND SHALL ABE REVIEWED AND APPROVED BY THE PROJECT ENGINEER PRIOR TO SUBMITTING FOR THE APPROVAL FROM THE CITY OF MORGAN HILL BUILDING AND INSPECITON OFFICE (C.B.C. SECT. 107.3.4.2)
16. ANY CHANGES IN THE FIELD THAT IMPACTS THE GREEN FEATURES SHALL BE REVIEWED BY THE GREEN RATER TO INSURE THAT CERTIFICATION AND POINT REQUIREMENT WILL STILL BE MET. FINAL CERTIFICATION WILL BE BASED ON EQUIVALENT AS-BUILT POINTS ACHEIVED AND THEY ARE NOT NECESSARILY AS THOSE ORIGINALLY CHOSEN IN THE PERMITTED BUILDING PLAN SETS.
17. PROVIDE A GREEN POINT RATED OR LEED CERTIFICATE TO THE CITY PRIOR TO CALLING FOR FINAL INSPECTION.
18. THE SOILS ENGINEER SHALL REVIEW THE FOUNDATION DESIGN AND PROVIDE A LETTER OF COMPLIANCE TO THE CITY OF MORGAN HILL BUILDING DEPARTMENT NOTING FOUNDATION REVIEAN AND APPROVAL. THE SOILS ENGINEER IS TO PROVIDE SPECIAL INSPECTION FOR FOUNDATION DESIGN INSTALLATION AT THE JOB SITE.
19. REQUIRED CONSTRUCTION WASTE MANAGEMENT PLAN IS TO BE DEFERRED SUBMITTAL. THIS WILL BE SUBMITTED UPON SELECTION OF A GENERAL BUILDING CONTRACTOR.
20. NOTE THAT A QUALITY INSULATION INSTALLATION (QII) IS PART OF THE SCOPE OF WORK FOR THIS PROJECT.

THESE DRAWINGS ARE THE PROPERTY OF OSITO HOLDINGS, LLC AND ARE INTENDED FOR USE SOLELY ON THE PROJECT TITLED HEREON. THESE DRAWINGS AS PROTECTED UNDER COPYRIGHT LAWS ARE NOT TO BE REPRODUCED IN WHOLE OR PART IN ANY MANNER WITHOUT THE EXPRESSED WRITTEN CONSENT OF THE DESIGNER. USE OF THESE DRAWINGS IS LIMITED TO THE SITE INTENDED AND THEIR USE AT ANY OTHER SITE, OR ON OTHER PROJECTS IS PROHIBITED EXCEPT BY PRIOR WRITTEN CONSENT OF THE DESIGNER. ALL REPRODUCTINS OF THESE DRAWINGS, IN WHOLE OR PART, REMAIN UNDER THE OWNERSHIP OF THE DESIGNER AND SHALL BE RETURNED UPON COMPLETION OF THE PROJECT OR UPON REQUEST OF THE DESIGNER.

COPYRIGHT © 2020

OWNER / DEVELOPER:

OSITO HOLDINGS, LLC
P.O. BOX 362
MORGAN HILL, CA.
(408).981.9114

PROJECT:

TENNANT SQUARE
215 TENNANT AVENUE
MORGAN HILL, CA.
COUNTY OF
SANTA CLARA

DRAWING:

INDIVIDUAL UNITS ROOM FINISH SCHEDULES

REVISIONS:
△1 02.20.2023 PLAN CHECK RESPONSE

DATE: JUNE 03, 2024
SCALE: AS NOTED
DRAWN BY: G.E.MOORE
PROJ. MGR. G.E.MOORE
PROJECT FILE: 0.20~ HALVORSEN
DRAWING: T.3

Heavy Equipment Operation

Best Management Practices for the Construction Industry

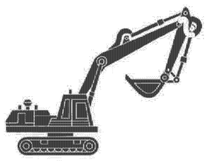

Best Management Practices for the

- Vehicle and equipment operators
- Site supervisors
- General contractors
- Home builders
- Developers

Doing the Job Right

Site Planning and Preventive Vehicle Maintenance

- ❑ Maintain all vehicles and heavy equipment. Inspect frequently for and repair leaks.
- ❑ Perform major maintenance, repair jobs, and vehicle and equipment washing off site where cleanup is easier.
- ❑ If you must drain and replace motor oil, radiator coolant, or other fluids on site, use drip pans or drop cloths to catch drips and spills. Collect all spent fluids, store in separate containers, and properly dispose as hazardous waste (recycle whenever possible).
- ❑ Do not use diesel oil to lubricate equipment parts, or clean equipment. Use only water for any onsite cleaning.
- ❑ Cover exposed fifth wheel hitches and other oily or greasy equipment during rain events.

Storm water Pollution from Heavy Equipment on Construction Sites

Poorly maintained vehicles and heavy equipment that leak fuel, oil, antifreeze or other fluids on the construction site are common sources of storm drain pollution. Prevent spills and leaks by isolating equipment from runoff channels, and by watching for leaks and other maintenance problems. Remove construction equipment from the site as soon as possible

Spill Cleanup

- ❑ Clean up spills immediately when they happen.
- ❑ Never hose down "dirty" pavement or impermeable surfaces where fluids have spilled. Use dry cleanup methods (absorbent materials, cat litter, and/or rags) whenever possible and properly dispose of absorbent materials.
- ❑ Sweep up spilled dry materials immediately. Never attempt to "wash them away" with water, or bury them.
- ❑ Use as little water as possible for dust control. Ensure water used doesn't leave silt or discharge to storm drains.
- ❑ Clean up spills on dirt areas by digging up and properly disposing of contaminated soil.
- ❑ Report significant spills to the appropriate local spill response agencies immediately.
- ❑ If the spill poses a significant hazard to human health and safety, property or the environment, you must also report it to the State Office of Emergency Services.

Roadwork and Paving

Best Management Practices for the Construction Industry

Best Management Practices for the

- Road crews
- Driveway/sidewalk/parking lot construction crews
- Seal coat contractors
- Operators of grading equipment, paving machines, dump trucks, concrete mixers
- Construction inspectors
- General contractors
- Home builders
- Developers

Doing The Job Right

General Business Practices

- ❑ Develop and implement erosion/sediment control plans for roadway embankments.
- ❑ Schedule excavation and grading work during dry weather.
- ❑ Check for and repair leaking equipment.
- ❑ Perform major equipment repairs at designated areas in your maintenance yard, where cleanup is easier. Avoid performing equipment repairs at construction sites.
- ❑ When refueling or when vehicle/equipment maintenance must be done on site, designate a location away from storm drains and creeks.
- ❑ Do not use diesel oil to lubricate equipment parts or clean equipment.
- ❑ Recycle used oil, concrete, broken asphalt, etc. whenever possible; or dispose of properly.

During Construction

- ❑ Avoid paving and seal coating in wet weather, or when rain is forecast, to prevent fresh materials from contacting stormwater runoff.
- ❑ Cover and seal catch basins and manholes when applying seal coat, slurry seal, fog seal, or similar materials.
- ❑ Protect drainage ways by using earth dikes, sand bags, or other controls to divert or trap and filter runoff.

Storm Drain Pollution from Roadwork

Road paving, surfacing, and pavement removal happen right in the street, where there are numerous opportunities for asphalt, saw-cut slurry, or excavated material to illegally enter storm drains. Extra planning is required to store and dispose of materials properly and guard against pollution of storm drains, creeks, and the Bay.

- ❑ Never wash excess material from exposed- aggregate concrete or similar treatments into a street or storm drain. Collect and recycle, or dispose to dirt area.
- ❑ Cover stockpiles (asphalt, sand, etc.) and other construction materials with plastic tarps. Protect from rainfall and prevent runoff with temporary roofs or plastic sheets and berms.
- ❑ Park paving machines over drip pans or absorbent material (cloth, rags, etc.) to catch drips when not in use.
- ❑ Clean up all spills and leaks using "dry" methods (with absorbent materials and/or rags), or dig up, remove, and properly dispose of contaminated soil.
- ❑ Collect and recycle or appropriately dispose of excess abrasive gravel or sand.
- ❑ Avoid over-application by water trucks for dust control.

Asphalt/Concrete Removal

- ❑ Avoid creating excess dust when breaking asphalt or concrete.
- ❑ After breaking up old pavement, be sure to remove all chunks and pieces. Make sure broken pavement does not come in contact with rainfall or runoff.
- ❑ When making saw cuts, use as little water as possible. Shovel or vacuum saw-cut slurry and remove from the site. Cover or protect storm drain inlets during saw-cutting. Sweep up, and properly dispose of, all residues.
- ❑ Sweep, never hose down streets to clean up tracked dirt. Use a street sweeper or vacuum truck. Do not dump vacuumed liquor in storm drains.

Fresh Concrete and Mortar Application

Best Management Practices for the Construction Industry

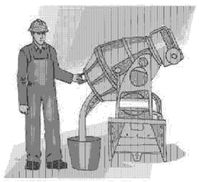

Best Management Practices for the

- Masons and bricklayers
- Sidewalk construction crews
- Patio construction workers
- Construction inspectors
- General contractors
- Home builders
- Developers
- Concrete delivery/pumping workers

Doing The Job Right

General Business Practices

- ❑ Wash out concrete mixers only in designated wash-out areas in your yard, away from storm drains and waterways, where the water will flow into a temporary waste pit in a dirt area. Let water percolate through soil and dispose of settled, hardened concrete as garbage. Whenever possible, recycle washout by pumping back into mixers for reuse.
- ❑ Wash out chutes onto dirt areas at site that do not flow to streets or drains.
- ❑ Always store both dry and wet materials under cover, protected from rainfall and runoff and away from storm drains or waterways. Protect dry materials from wind.
- ❑ Secure bags of cement after they are open. Be sure to keep wind-blown cement powder away from streets, gutters, storm drains, rainfall, and runoff.
- ❑ Do not use diesel fuel as a lubricant on concrete forms, tools, or trailers.

Storm Drain Pollution from Fresh Concrete and Mortar Applications

Fresh concrete and cement-related mortars that wash into lakes, streams, or estuaries are toxic to fish and the aquatic environment. Disposing of these materials to the storm drains or creeks can block storm drains, causes serious problems, and is prohibited by law.

During Construction

- ❑ Don't mix up more fresh concrete or cement than you will use in a two-hour period.
- ❑ Set up and operate small mixers on tarps or heavy plastic drop cloths.
- ❑ When cleaning up after driveway or sidewalk construction, wash fines onto dirt areas, not down the driveway or into the street or storm drain.
- ❑ Protect applications of fresh concrete and mortar from rainfall and runoff until the material has dried.
- ❑ Wash down exposed aggregate concrete only when the wash water can (1) flow onto a dirt area; (2) drain onto a bermed surface from which it can be pumped and disposed of properly; or (3) be vacuumed from a catchment created by blocking a storm drain inlet. If necessary, divert runoff with temporary berms. Make sure runoff does not reach gutters or storm drains.
- ❑ When breaking up pavement, be sure to pick up all the pieces and dispose of properly. Recycle large chunks of broken concrete at a landfill.
- ❑ Never bury waste material. Dispose of small amounts of excess dry concrete, grout, and mortar in the trash.
- ❑ Never dispose of washout into the street, storm drains, drainage ditches, or streams.

Preventing Pollution: It's Up to Us

In the Santa Clara Valley, storm drains transport water directly to local creeks and San Francisco Bay without treatment. Storm water pollution is a serious problem for wildlife dependent on our waterways and for the people who live near polluted streams or bay lands. Some common sources of this pollution include spilled oil, fuel, and fluids from vehicles and heavy equipment; construction debris; sediment created by erosion; landscaping runoff containing pesticides or weed killers; and materials such as used motor oil, antifreeze, and paint products that people pour or spill into a street or storm drain.

Thirteen valley municipalities have joined together with Santa Clara County and the Santa Clara Valley Water District to educate local residents and businesses and fight storm water pollution. TO comply with this program, contractors most comply with the practices described this drawing sheet.

Spill Response Agencies

DIAL 9-1-1

State Office of Emergency Services Warning Center (24 hours): **800-852-7550**

Santa Clara County Environmental Health Services: (408) 299-6930

Local Pollution Control Agencies

County of Santa Clara Pollution Prevention Program: (408) 441-1195

County of Santa Clara Integrated Waste Management Program: (408) 441-1198

County of Santa Clara District Attorney Environmental Crimes Hotline: (408) 299-TIPS

Santa Clara County Recycling Hotline: 1-800-533-8414

Santa Clara Valley Water District: (408) 265-2600

Santa Clara Valley Water District Pollution Hotline: 1-888-510-5151

Regional Water Quality Control Board San Francisco Bay Region: (510) 622-2300

Palo Alto Regional Water Quality Control Plant: (650) 329-2598
Serving East Palo Alto Sanitary District, Los Altos, Los Altos Hills, Mountain View, Palo Alto, Stanford

Landscaping, Gardening, and Pool Maintenance

Best Management Practices for the Construction Industry

Best Management Practices for the

- Landscapers
- Gardeners
- Swimming pool/spa service and repair workers
- General contractors
- Home builders
- Developers
- Homeowners

Doing The Right Job

General Business Practices

- ❑ Protect stockpiles and landscaping materials from wind and rain by storing them under tarps or secured plastic sheeting.
- ❑ Store pesticides, fertilizers, and other chemicals indoors or in a shed or storage cabinet.
- ❑ Schedule grading and excavation projects during dry weather.
- ❑ Use temporary check dams or ditches to divert runoff away from storm drains.
- ❑ Protect storm drains with sandbags or other sediment controls.
- ❑ Re-vegetation is an excellent form of erosion control for any site

Landscaping/Garden Maintenance

- ❑ Use pesticides sparingly, according to instructions on the label. Rinse empty containers, and use rinse water as product. Dispose of rinsed, empty containers in the trash. Dispose of unused pesticides as hazardous waste.
- ❑ Collect lawn and garden clippings, pruning waste, and tree trimmings. Chip if necessary, and compost.
- ❑ In communities with curbside pick-up of yard waste, place clippings and pruning waste at the curb in approved bags or containers. Or, take to a landfill that composts yard waste. No curbside pickup of yard waste is available for commercial properties.

Storm Drain Pollution From Landscaping and Swimming Pool Maintenance

Many landscaping activities expose soils and increase the likelihood that earth and garden chemicals will run off into the storm drains during irrigation or when it rains. Swimming pool water containing chlorine and copper-based algaecides should never be discharged to storm drains. These chemicals are toxic to aquatic life.

- ❑ Do not blow or rake leaves, etc. into the street, or place yard waste in gutters or on dirt shoulders, unless you are piling them for recycling (allowed by San Jose and unincorporated County only). Sweep up any leaves, litter or residue in gutters or on street.
- ❑ In San Jose, leave yard waste for curbside recycling pickup in piles in the street, 18 inches from the curb and completely out of the flow line to any storm drain.

Pool/Fountain/Spa Maintenance

Draining Pools Or Spas

When it's time to drain a pool, spa, or fountain, please be sure to call your local wastewater treatment plant before you start for further guidance on flow rate restrictions, backflow prevention, and handling special cleaning waste (such as acid wash). Discharge flows shall not exceed 100 gallon per minute.

- ❑ Never discharge pool or spa water to a street or storm drain; discharge to a sanitary sewer cleanout.
- ❑ If possible, when emptying a pool or spa, let chlorine dissipate for a few days and then recycle/reuse water by draining it gradually onto a landscaped area.
- ❑ Do not use copper-based algaecides. Control algae with chlorine or other alternatives, such as sodium bromide.

Filter Cleaning

- ❑ Never clean a filter in the street or near a storm drain. Rinse cartridge and diatomaceous earth filters onto a dirt area, and spade filter residue into soil. Dispose of spent diatomaceous earth in the garbage.
- ❑ If there is no suitable dirt area, call your local wastewater treatment plant for instructions on discharging filter backwash or rinse water to the sanitary sewer.

Painting and Application of Solvents and Adhesives

Best Management Practices for the Construction Industry

Best Management Practices for the

- Homeowners
- Painters
- Paperhangers
- Plasterers
- Graphic artists
- Dry wall crews
- Floor covering installers
- General contractors
- Home builders
- Developers

Doing The Job Right

Handling Paint Products

- ❑ **Keep all liquid paint products and wastes away from the gutter, street, and storm drains.** Liquid residues from paints, thinners, solvents, glues, and cleaning fluids are hazardous wastes and must be disposed of at a hazardous waste collection facility (contact your local stormwater program listed on the back of this brochure).
- ❑ When thoroughly dry, empty paint cans, used brushes, rags, and drop cloths may be disposed of as garbage in a sanitary landfill. Empty, dry paint cans also may be recycled as metal.
- ❑ Wash water from painted buildings constructed before 1978 can contain high amounts of lead, even if paint chips are not present. Before you begin stripping paint or cleaning pre-1978 building exteriors with water under high pressure, test paint for lead by taking paint scrapings to a local laboratory. See Yellow Pages for a state-certified laboratory.
- ❑ If there is loose paint on the building, or if the paint tests positive for lead, block storm drains. Check with the wastewater treatment plant to determine whether you may discharge water to the sanitary sewer, or if you must send it offsite for disposal as hazardous waste.

Storm Drain Pollution from Paints, Solvents, and Adhesives

All paints, solvents, and adhesives contain chemicals that are harmful to wildlife in local creeks, San Francisco Bay, and the Pacific Ocean Toxic chemicals may come from liquid or solid products or from cleaning residues or rags. Paint material and wastes, adhesives and cleaning fluids should be recycled when possible, or disposed of properly to prevent these materials from flowing into storm drains and watercourses.

Painting Cleanup

- ❑ **Never clean brushes or rinse paint containers into a street, gutter, storm drain, French drain, or stream.**
- ❑ For **water-based paints**, paint out brushes to the extent possible, and rinse into a drain that goes to the sanitary sewer. Never pour paint down a storm drain.
- ❑ For **oil-based paints**, paint out brushes to the extent possible and clean with thinner or solvent in a proper container. Filter and reuse thinners and solvents. Dispose of excess liquids and residue as hazardous waste.

Paint Removal

- ❑ Paint chips and dust from non-hazardous dry stripping and sand blasting may be swept up or collected in plastic drop cloths and disposed of as trash.
- ❑ Chemical paint stripping residue and chips and dust from marine paints or paints containing lead, mercury or tributyl tin must be disposed of as hazardous wastes. Lead based paint removal requires a state-certified contractor.
- ❑ When stripping or cleaning building exteriors with high-pressure water, block storm drains. Direct wash water onto a dirt area and spade into soil. Or, check with the wastewater treatment authority to find out if you can collect (mop or vacuum) building cleaning water and dispose to the sanitary sewer. Sampling of the water may be required to assist the wastewater treatment authority in making its decision.

Recycle/Reuse Leftover Paints Whenever Possible

- ❑ Recycle or donate excess **water-based (latex) paint**, or return to supplier.
- ❑ Reuse leftover **oil-based paint**. Dispose of non-recyclable thinners, sludge and unwanted paint, as hazardous waste.
- ❑ Unopened cans of paint may be able to be returned to the paint vendor. Check with the vendor regarding its "buy-back" policy.

Municipal Code Requirements

Municipal Code Chapter 10.08.390 Non-storm water discharges

A. Unlawful discharges. It shall be unlawful to discharge any domestic waste or industrial waste into storm drains, gutters, creeks, or San Francisco Bay. Unlawful discharges to storm drains shall include, but not be limited to, discharge from toilets; sinks; industrial processes; cooling systems; boilers; fabric cleaning; equipment cleaning; vehicle cleaning; construction activities, including, but not limited to, painting, paving, concrete placement, saw cutting and grading; swimming pools; spas; and fountains, unless specifically permitted by a discharge permit or unless exempted pursuant to guidelines published by the superintendent.

B. Threatened discharges. It shall be unlawful to cause hazardous materials, domestic waste, or industrial waste to be deposited in such a manner or location as to constitute a threatened discharge into storm drains, gutters, creeks or San Francisco Bay. A "threatened discharge" is a condition creating a substantial probability of harm, when the probability and potential extent of harm make it reasonably necessary to take immediate action to prevent, reduce or mitigate damages to persons, property or natural resources. Domestic or industrial wastes that are no longer contained in a pipe, tank or other container are considered to be threatened discharges unless they are actively being cleaned up.

Municipal Code Section 10.08.430 Requirements for construction operations.

A. A spill response plan for hazardous waste, hazardous materials and uncontained construction materials shall be prepared and available at the construction sites for all projects where the proposed construction site is equal to or greater than one acre of disturbed soil and for any other projects for which the city engineer determines is necessary to protect surface waters. Preparation of the plan shall be in accordance with guidelines published by the city engineer.

B. A storm water pollution prevention plan shall be prepared and available at the construction sites for all projects greater than one acre of disturbed soil and for any other projects for which the city engineer determines that a storm water management plan is necessary to protect surface waters. Preparation of the plan shall be in accordance with guidelines published by the city engineer.

C. Prior approval shall be obtained from the city engineer or designee to discharge water pumped from construction sites to the storm drain. The city engineer or designee may require gravity settling and filtration upon a determination that either or both would improve the water quality of the discharge. Contaminated groundwater or water that exceeds state or federal requirements for discharge to navigable waters may not be discharged to the storm drain. Such water may be discharged to the sewer, provided that the requirements of Section 10.08.240 are met and the approval of the superintendent is obtained prior to discharge.

D. No cleanup of construction debris from the streets shall result in the discharge of water to the storm drain system; nor shall any construction debris be deposited or allowed to be deposited in the storm drain system. (Prior code § 5-5.643)

Criminal and judicial penalties can be assessed for non-compliance.

General Construction And Site Supervision

Best Management Practices For Construction

Best Management Practices for the

- General contractors
- Site supervisors
- Inspectors
- Home builders
- Developers

Storm Drain Pollution from Construction Activities

Construction sites are common sources of storm water pollution. Materials and wastes that blow or wash into a storm drain, gutter, or street have a direct impact on local creeks and the Bay.

As a contractor, or site supervisor, owner or operator of a site, you may be responsible for any environmental damage caused by your subcontractors or employees.

Doing The Job Right

General Principals

- ❑ Keep an orderly site and ensure good housekeeping practices are used.
- ❑ Maintain equipment properly.
- ❑ Cover materials when they are not in use.
- ❑ Keep materials away from streets, storm drains and drainage channels.
- ❑ Ensure dust control water doesn't leave site or discharge to storm drains.

Advance Planning To Prevent Pollution

- ❑ Schedule excavation and grading activities for dry weather periods. To reduce soil erosion, plant temporary vegetation or place other erosion controls before rain begins. Use the *Erosion and Sediment Control Manual*, available from the Regional Water Quality Control Board, as a reference.
- ❑ Control the amount of runoff crossing your site (especially during excavation) by using berms or temporary or permanent drainage ditches to divert water flow around the site. Reduce storm water runoff velocities by constructing temporary check dams or berms where appropriate.
- ❑ Train your employees and subcontractors. Make these best management practices available to everyone who works on the construction site. Inform subcontractors about the storm water requirements and their own responsibilities.

Good Housekeeping Practices

- ❑ Designate one area of the site for auto parking, vehicle refueling, and routine equipment maintenance. The designated area should be well away from streams or storm drain inlets, bermed if necessary. Make major repairs off site.
- ❑ Keep materials out of the rain – prevent runoff contamination at the source. Cover exposed piles of soil or construction materials with plastic sheeting or temporary roofs. Before it rains, sweep and remove materials from surfaces that drain to storm drains, creeks, or channels.
- ❑ Keep pollutants off exposed surfaces. Place trashcans and recycling receptacles around the site to minimize litter.
- ❑ Clean up leaks, drips and other spills immediately so they do not contaminate soil or groundwater or leave residue on paved surfaces. Use dry cleanup methods whenever possible. If you must use water, use just enough to keep the dust down.
- ❑ Cover and maintain dumpsters. Check frequently for leaks. Place dumpsters under roofs or cover with tarps or plastic sheeting secured around the outside of the dumpster. Never clean out a dumpster by hosing it down on the construction site.
- ❑ Set portable toilets away from storm drains. Make sure portable toilets are in good working order. Check frequently for leaks.

Materials/Waste Handling

- ❑ Practice Source Reduction -- minimize waste when you order materials. Order only the amount you need to finish the job.
- ❑ Use recyclable materials whenever possible. Arrange for pick-up of recyclable materials such as concrete, asphalt, scrap metal, solvents, degreasers, cleared vegetation, paper, rock, and vehicle maintenance materials such as used oil, antifreeze, batteries, and tires.
- ❑ Dispose of all wastes properly. Many construction materials and wastes, including solvents, water-based paints, vehicle fluids, broken asphalt and concrete, wood, and cleared vegetation can be recycled. Materials that cannot be recycled must be taken to an appropriate landfill or disposed of as hazardous waste. Never bury waste materials or leave them in the street or near a creek or stream bed.

Permits

- ❑ In addition to local building permits, you will need to obtain coverage under the State's General Construction Activity Storm water Permit if your construction site disturbs one acre or more. Obtain information from the Regional Water Quality Control Board.

Earth-Moving And Dewatering Activities

Best Management Practices for the Construction Industry

Best Management Practices for the

- Bulldozer, back hoe, and grading machine operators
- Dump truck drivers
- Site supervisors
- General contractors
- Home builders
- Developers

Doing The Job Right

General Business Practices

- ❑ Schedule excavation and grading work during dry weather.
- ❑ Perform major equipment repairs away from the job site.
- ❑ When refueling or vehicle/equipment maintenance must be done on site, designate a location away from storm drains.
- ❑ Do not use diesel oil to lubricate equipment parts, or clean equipment.

Practices During Construction

- ❑ Remove existing vegetation only when absolutely necessary. Plant *temporary* vegetation for erosion control on slopes or where construction is not immediately planned.
- ❑ Protect down slope drainage courses, streams, and storm drains with wattles, or temporary drainage swales. Use check dams or ditches to divert runoff around excavations. Refer to the Regional Water Quality Control Board's *Erosion and Sediment Control Field Manual* for proper erosion and sediment control measures.

Storm Drain Pollution from Earth-Moving Activities and Dewatering

Soil excavation and grading operations loosen large amounts of soil that can flow or blow into storm drains when handled improperly. Sediments in runoff can clog storm drains, smother aquatic life, and destroy habitats in creeks and the Bay. Effective erosion control practices reduce the amount of runoff crossing a site and slow the flow with check dams or roughened ground surfaces.

Contaminated groundwater is a common problem in the Santa Clara Valley. Depending on soil types and site history, groundwater pumped from construction sites may be contaminated with toxics (such as oil or solvents) or laden with sediments. Any of these pollutants can harm wildlife in creeks or the Bay, or interfere with wastewater treatment plant operation.

Discharging sediment-laden water from a dewatering site into any water of the state without treatment is prohibited.

- ❑ Cover stockpiles and excavated soil with secured tarps or plastic sheeting.

Dewatering Operations

1. Check for Toxic Pollutants

- ❑ Check for odors, discoloration, or an oily sheen on groundwater.
- ❑ Call your local wastewater treatment agency and ask whether the groundwater must be tested.
- ❑ If contamination is suspected, have the water tested by a certified laboratory.
- ❑ Depending on the test results, you may be allowed to discharge pumped groundwater to the storm drain (if no sediments present) or sanitary sewer. OR, you may be required to collect and haul pumped groundwater offsite for treatment and disposal at an appropriate treatment facility.

2. Check for Sediment Levels

- ❑ If the water is clear, the pumping time is less than 24 hours, and the flow rate is less than 20 gallons per minute, you may pump water to the street or storm drain.
- ❑ If the pumping time is more than 24 hours and the flow rate greater than 20 gpm, call your local wastewater treatment plant for guidance.
- ❑ If the water is not clear, solids must be filtered or settled out by pumping to a settling tank prior to discharge. Options for filtering include:
  - Pumping through a perforated pipe sunk part way into a small pit filled with gravel;
  - Pumping from a bucket placed below water level using a submersible pump;
  - Pumping through a filtering device such as a swimming pool filter or filter fabric wrapped around end of suction pipe.
- ❑ When discharging to a storm drain, protect the inlet using a barrier of burlap bags filled with drain rock, or cover inlet with filter fabric anchored under the grate. OR pump water through a grassy swale prior to discharge.

Blueprint for a Clean Bay

Remember: The property owner and the contractor share ultimate responsibility for the activities that occur on a construction site. You may be held responsible for any environmental damage caused by your subcontractors or employees.

Best Management Practices for the Construction Industry

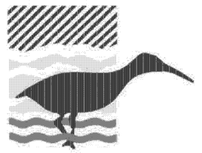

APPROVAL CERTIFICATE NO. 21-003

APPLICATION NUMBER: DESIGN PERMIT SR2020-0014/TENATIVE PARCEL MAP SD2020-0005: TENNANT-OSITO (TENNANT SQUARE)

LOCATION: NORTH OF TENNANT AVENUE, APPROXIMATELY 450 FEET BETWEEN CHURCH STREET AND VINEYARD BOULEVARD (APN 817-04-059)

SITE AREA: 0.99-ACRES

GENERAL PLAN: RESIDENTIAL ATTACHED LOW DENSITY (RAL)

ZONING: RESIDENTIAL ATTACHED LOW DENSITY 3,500 (RAL 3.500)

DESCRIPTION: A DESIGN PERMIT AND TENTATIVE PARCEL MAP FOR THE DEVELOPMENT OF 16 SINGLE-FAMILY ATTACHED TOWNHOME-STYLE CONDOMINIUMS. THE TENTATIVE PARCEL MAP WOULD CREAT THREE LOTS. THE PROJECT WOULD BE CONSISTENT WITH CURRENT GENERAL PLAN LAND USE AND ZONING SITE DESIGNATIONS. TWO OF THE 16 UNITS WOULD BE DEDICATED FOR AFFORDABLE HOUSING. ALL PROPOSED CONDOMINIUMS WOULD BE TWO STORIES, AND WOULD INCLUDE THREE BEDROOMS, 2.5 BATHROOMS, AND A SINGLE CAR GARAGE. THE PROPOSED PROJECT WOULD INCLUDE 35 PARKING SPACES IN TOTAL. OF THE 16 UNITS, 12 WOULD INCLUDE A DRIVEWAY SUFFICIENT TO ACCOMMODATE TWO PRKED CARS. IN ADDITION, AN 11-SPACE SURFACE PARKING LOT, LOCATED AT THE NORTHERN END OF THE PARCEL WOULD PROVIDE PARKING SPACES FOR THE REMAINING FOUR UNITS AND FOR VISITORS. THE PROPOSED PROJECT WOULD INCLUDE TWO TIER 1 (PARK BENCHES AND BARBEQUE AREA) AND TWO TIER 2 (SHADE TRELLIS AND TWO GARDEN PLOTS) AMENITIES.

RECITALS:

1. ON JULY 14, 2020, THE DEVELOPMENT SERVICES DEPARTMENT RECEIVED AN APPLICATION FOR DESIGN PERMIT APPROVAL TO CONSTRUCT 16 TOWNHOME-STYLE CONDOMINIUM UNITS WITHIN TWO BUILDINGS WITH EIGHT UNITS EACH AND THE CONSTRUCTION OF AN INTERNAL STREET WITH ACCESS TO TENNANT AVENUE AND ASSOCIATED IMPROVEMENTS FOR A 3-LOT RESIDENTIAL SUBDIVISION PROJECT ON A 0.99-ACRE PARCEL. PURSUANT TO MUNICIPAL CODE SECTION 18.108.040.C.1 (DESIGN PERMIT), PROJECTS WITH THREE OR MORE RESIDENTIAL UNITS MUST RECEIVE DESIGN PERMIT APPROVAL PRIOR TO DEVELOPMENT.
2. THE PROJECT WAS REVIEWED BY THE DEVELOPMENT REVIEW COMMITTEE (DRC) AT ITS REGULAR MEETING OF JULY 29, 2020 AND COMMENTS WERE RECEIVED FROM THE VARIOUS DEPARTMENTS AND AGENCIES. THE APPLICATION WAS DEEMED COMPLETE FOR PROCESSING ON NOVEMBER 11, 2020);
3. CALIFORNIA SENATE BILL 330 (SB 330), ESTABLISHES THE "HOUSING CRISIS ACT OF 2019", EFFECTIVE JANUARY 1, 2020. THE BILL AMENDED THE HOUSING ACCOUNTABILITY ACT (HAA) (GOVERNMENT CODE SECTION 65589.5), MAKING CHANGES TO THE LOCAL APPROVAL PROCESS AND THE PERMIT STREAMLINING ACT UNTIL JANUARY 1, 2025. THE CITY COUNCIL ADOPTED RESOLUTION NO. 19-065 ON DECEMBER 18, 2019, IMPLEMENTING THE REQUIREMENTS OF SB 330 BY ESTABLISHING OBJECTIVE RESIDENTAIL DEVELOPMENT DESIGN AND DEVELOPMENT STANDARDS THE PROJECT IS SUBJECT TO THE SB 330 PERMIT STREAMLINING PROCESS AND HAS BEEN DESIGNED CONSISTENT WITH THE RESIDENTIAL DEVELOPMENT DESIGN AND DEVELOPMENT STANDARDS, WITH ONE CONCESSION.
4. ON SEPTEMBER 16, 2020, CITY COUNCIL APPROVED A CONSESSION FOR THE BUILDING MASS STANDARD IDENTIFIED IN RESIDENTIAL DEVELOPMENT DESIGN AND DEVELOPMENT STANDARD NO. 28.b "HEIGHT AND PROJECT MASSING". THIS STANDARD REQUIRES A MAJOR FULL-HEIGHT RECESS AT LEAST 10 FEET DEEP FOR MULTI-FAMILY PROJECTS ALONG THE LENGTH OF THE BUILDING TO SUCCESSFULLY BREAK THE BUILDING INTO SMALLER DISCRETE MASSES. THE PROPOSED PROJECT HAS BEEN DESIGNED WITH RECESSES TO BREAK UP THE MASSING OF THE BUILDINGS TO COMPLY WITH THE INTENTION OF THE DEVELOMENT STANDARD.
5. THE PROPOSED PROJECT WAS REVIEWED IN COMPLIANCE WITH THE CALIFONRIA ENVIRONMENTAL QUALITY ACT (CEQA). THE PROJECT WAS FOUND TO BE EXEMPT FROM CEQA PURSUANT TO SECTION 15332 AND DOES NO MEET ANY OF THE EXCEPTIONS TO CATEGORICAL EXEMPTIONS SET FORTH IN SECTION 15300.2 OF THE CEQA GUIDELINES. A CATEGORICAL EXEMPTION MEMORANDUM HAS BEEN PREPARED.
6. COMMENTS RECEIVED FROM THE PUBLIC AND FROM THE APPLICANT, ALONG WITH EXHIBITS AND DRAWINGS AND OTHER MATERIALS HAVE BEEN CONSIDERED IN THE REVIEW PROCESS:
7. ON APRIL 13, 2021 THE DEVELOPMENT SERVICES DEPARTMENT CONSIDERED SAID APPLICATION AT THE CLOSE OF DULY NOTICED 10-DAY PUBLIC COMMENT PERIOD; AND,
8. PURSUANT TO THE AUTHORITY SET FORTH UNDER SECTION 18.108.040 (DESIGN PERMIT) OF THE MORGAN HILL MUNICIPAL CODE, THE DEVELOPMENT SERVICES DIRECTOR HEREBY APPROVES THE PROJECT APPLICATION SUBJECT TO THE CONDITIONS CONTAINED WITHIN THIS APPROVAL CERTIFICATE.

FINDINGS:

SECTION 1. DESIGN PERMIT AND SUBDIVISION FINDINGS

THE FOLLOWING FINDINGS ARE MADE FOR THE PURPOSES OF APPROVING A DESIGN PERMIT IN ACCORDANCE WITH SECTION 18.108.040 (J.) OF THE MORGAN HILL MUNICIPAL CODE.

1. THE PROPOSED PROJECT IS CONSISTENT WITH THE GENERAL PLAN AND ANY APPLICABLE SPECIFIC PLAN, AREA PLAN, OR OTHER DESIGN POLICES AND REGULATIONS ADOPTED BY THE CITY COUNCIL.

   THE RESIDENTIAL ATTACHED LOW (RAL) LAND USE DESIGNATION IS INTENDED TO ACCOMMODATE ATTACHED HOMES INCLUDING DUPLEXES/DUETS, COURTYARD HOMES, TOWNHOMES, AND GARD APARTMENTS. RALL AREAS GENERALLY ARE LOCATED IN OR NEXT TO EXISTING RESIDENTIAL REIGHBORHOODS AND CLOSE TO COMMERCIAL CORRIDORS. THIS DESIGNATION ALLOWS SIX TO 16 UNITS PER NET ACRE. THE PROPOSED PROJECT WILL INCLUDE DEVELOPMENT OF 16 UNITS ON THE 0.99-ACRE PROJECT SITE, FOR A DENSITY OF 16 UNITS PER ACRE, WHICH WILL BE CONSISTENT WITH THE MAXIMUM ALLOWALE DENSITY FOR THE LAND USE DESIGNATION
2. THE PROPOSED PROJECT COMLIES WITH ALL APPLICABLE PROVISIONS OF THE ZONING CODE AND MUNICIPAL CODE.
3. THE PROPOSED PROJECT COMPLIES WITH ALL APPLICABLE DESIGN STANDARDS AND GUIDELINES CONTAINED IN THE CITY'S DESIGN REVIEW HANDBOOK AND DESIGN REVEIEW CRITERIA SET FORTH IN SECTION 18.108.40 (H) OF THE MORGAN HILL MUNICIPAL CODE AND THE ADOPTED RESIDNETIAL DEVELOPMENT DESIGN AND DEVELOPMENT STANDARDS.

   THE PROJECT IS SUBJECT TO THE SB 330 PERMIT STREAMLINING PROCESS AND HAS BEEN DESIGNED CONSISTENT WITH THE CITY'S DESIGN REVIEW CRITERIA AND THE CITY'S RESIDENTIAL DEVELOPMENT DESIGN AND DEVELOPMENT STANDARDS ADOPTED BY CITY COUNCIL RESOLUTION NO. 19-065 ON DECEMBER 18, 2019, WITH ONE CONCESSION.

   ON SEPTEMBER 16, 2020, CITY COUNCIL APPROVED A CONCESSION FOR THE BUILDING MASS STANDARD IDENTIFIED IN RESIDENTIAL DEVELOPMENT DESIGN AND DEVELOPMENT STANDARD NO. 28.b "HEIGHT AND PROJECT MASSING". THIS STANDARD REQUIRES A MAJOR FULL-HEIGHT RECESS AT LEAST 10 FEET DEEP FOR MULTI-FAMILY PROJECTS ALONG THE LENGTH OF THE BUILDING TO SUCCESSFULLY BREAK THE BUILDING INTO SMALL DISCRETE MASSES. THE PROPOSED PROJECT HAS BEEN DESIGNED WITH RECESSES TO BREAK UP THE MASSING OF THE BUILDINGS TO COMPLY WITH THE INTENTION OF THE DEVELOPMENT STANDARD.
4. THE PROPOSED PROJECT HAS BEEN REVIEWED IN COMPLIANCE WITH THE CALIFORNIA ENVIRONMENTAL QUALITY ACT (CEQA). THE DEVELOPMENT SERVICES DIRECTOR HEREBY FINDS THAT, BASED ON THE WHOLE RECORD BEFORE IT, THAT THE PROJECT IS EXEMPT FROM CEQA PURSUANT TO SECTION 15332 AND DOES NOT MEET ANY OF THE EXCEPTIONS TO CATEGORICAL EXEMPTIONS SET FORTH IN SECTION 15300.2 OF THE CEQA GUIDELINES. THE CUSTODIAN OF THE DOCUMENTS OR OTHER MATERIAL WHICH CONSITITUTE THE RECORD SHALL BE THE DEVELOPMENT SERVICES DEPARTMENT.
5. THE PROPOSED DEVELOPMENT WILL NOT BE DETRIMENTAL TO THE PUBLIC HEALTH, SAFETY, OR WELFARE OR MATERIALLY INJURIOS TO THE PROPERTIES OR IMPROVEMENTS IN THE VICINITY.

   THE PROJECT IS LOCATED ON A 0.99-ACRE VACANT IN-FILL SITE SURROUNDING BY RESIDENTIAL, COMMERCIAL, AND LIGHT INDUSTRIAL USES AND IS ALSO LOCATED ON TENNANT AVENUE, WHICH IS A MAJOR ARTERIAL ROAD. DUE TO THE SMALL SIZE AND LOCATION OF THE PROJECT, THE RESIDENTIAL PROJECT WAS FOUND TO BE CONSISTENT WITH SURROUNDING LAND USES. THE PROJECT WAS DETERMINED TO NOT HAVE A SIGNIFICANT IMPACT ON BIOLOGICAL SPECIES, TRAFFIC, NOISE, AIR QUALITY, WATER QUALITY, UTILITIES AND PUBLIC SERVICES PER THE REVIEW CONDUCTED IN COMPLIANCE TO CEQA. THEREFORE, THE PROJECT WILL NOT BE DETRIMENTAL TO THE PUBLIC HEALTH, SAFETY, OR WELFARE OR BE MATERIALLY INJURIOUS TO THE PROPERTIES OR IMPROVEMENTS IN THE VICINITY.
6. THE TENTATIVE PARCEL MAP ENTITLED D"TENNANT SQUARE" SUBMITTED BY HANNA-BRUNETTI ON MARCH 26, 2021, ATTACHED AS EXHIBIT A, COMPLIES WITH THE PARCEL MAP REQUIREMENTS SET FORTH UNDER TITLE 17 OF THE MORGAN HILL MUNICIPAL CODE.

SECTION 2. THE PROPOSED PROJECT WILL NOT RESULT IN A VIOLATION OF THE REQUIREMENTS ESTABLISHED BY THE REGIONAL WATER QUALITY CONTROL BOARD.

SECTION 3. THE PROPOSED PROJECT HAS BEEN REVIEWED IN COMPLIANCE WITH THE CALIFONRIA ENVIRONMENTAL QUALITY ACT (CEQA). THE DEVELOPMENT SERVICES DIRECTOR HEREBY FINDS THAT BASED ON THE WHOLE RECORD BEFORE IT, THAT THE PROJECT IS EXEMPT FROM CEQA UNDER SECTION 15332 AND DOES NOT MEET ANY OF THE EXCEPTIONS TO CATEGORICAL EXEMPTIONS SET FORTH IN SECTION 15300.2 OF THE CEQA GUIDELINES. THE CUSTODIAN OF THE DOCUMENTS OR OTHER MATERIAL WHICH CONSTITUTE THE RECORD SHALL BE DEVELOPMENT SERVICES DEPARTMENT.

SECTION 4. PURSUANT TO THE AUTHORITY SET FORTH UNDER SECTION 17.24.060, 18.100.030, AND 18.108.040 OF THE MORGAN HILL MUNICIPAL CODE, THE DEVELOPMENT SERVICES DIRECTOR HEREBY APPROVES THE PROJECT APPLICATION SUBJECT TO THE ATTACHED CONDITIONS OF APPROVAL OUTLINED IN EXHIBIT B.

APPROVED THIS 13TH DAY OF APRIL, 2021.

JENNIFER CARMAN
DEVELOPMENT SERVICES DIRECTOR

APPROVAL CERTIFICATE NO. 21-003 - CONDITIONS OF APPROVAL - STANDARD CONDITIONS - APPLICATION NO: SR2020-0014: TENNANT - OSITO (TENNANT SQUARE)

THE FOLLOWING APPROVAL REQUIREMENTS AND ANY SPECIAL CONDITIONS SHALL BE APPLIED THROUGH THE DEVELOPMENT APPROVAL PROCESS.

LEGEND

MHMC = MORGAN HILL MUNICIPAL CODE
MHARH = MORGAN HILL ARCHITECTURAL REVIEW HANDBOOK
CMH = CITY OF MORGAN HILL
CFC = CALIFORNIA FIRE CODE

1. PROJECT DESCRIPTION

THE PROJECT INCLUDES THE DEVELOPMENT OF 16 TOWNHOME-STYLE CONDOMINIUM UNITS WITHIN TWO BUILDINGS WITH EIGHT UNITS EACH AND THE CONSTRUCTION OF AN INTERNAL STREET WITH ACCESS TO TENNANT AVENUE. THE TOTAL RESIDENTIAL LIVING SPACE WOULD INCLUDE 24.736 SQUARE FEET (SF). THE PROJECT WOULD BE CONSISTENT WITH THE SITE'S CURRENT GENERAL PLAN LAND USE AND ZONING DESIGNATIONS. TWO OF THE 16 UNITS WOULD BE DEDICATED FOR AFFORDABLE HOUSING. ALL PROPOSED CONDOMINIUMS WOULD BE TWO STORIES, AND WOULD INCLUDE THREE BEDROOMS, 2.5 BATHROOMS, AND A SINGLE CAR GARAGE. THE PROPOSED PROJECT WOULD INCLUDE 35 PARKING SPACES IN TOTAL. OF THE 16 UNITS, 12 WOULD INCLUDE A DRIVEWAY SUFFICIENT TO ACCOMMODATE TWO PARKED CARS. IN ADDITION, AN 11-SPACE SURFACE PARKING LOT, LOCATED AT THE NORTHERN END OF THE PARCEL, WOULD PROVIDE PARKING SPACES FOR THE REMAINING FOUR UNITS AND FOR VISITORS. THE PROPOSED PROJECT WOULD INCLUDE TWO TIER 1 (PARK BENCHES AND BARBEQUE AREA) AND TWO TIER 2 (SHADE TRELLIS AND TWO GARDEN PLOTS) AMENITIES.

THE PROJECT SHALL COMPLY WITH ALL REQUIREMENTS OF RELATED PROJECT APPROVALS GRANTED BY THE CITY, INCLUDING ALL OF THE FOLLOWING:

A. DESIGN REVIEW SR2020-0014
B. TENTATIVE SUBDIVISION MAP SD2020-0005
C. ENVIRONMENTAL ASSESSMENT EA2020-0011

II. PROJECT CONDITIONS OF APPROVAL

THIS DESIGN PERMIT APPROVAL IS LIMITED TO THE PLAN SET DATE STAMPED MARCH 26, 2021 ON FILE (FILE NUMBER SR2020-0014) WITH THE DEVELOPMENT SERVICES DEPARTMENT. THE APPROVED BUILDING PLANS AND LANDSCAPE PLANS MUST BE IN SUBTANTIAL CONFORMANCE WITH THE DESIGN PERMIT PLANS AS DETERMINED BY THE DEVELOPMENT SERVICES DIRECTOR. THESE DOCUMENTS SHOW THE LOCATION AND DIMENSIONS OF ALL VEHICLE AND PEDESTRIAN CIRCULATION WAYS (INGRESS/EGRESS), COMMON AREAS AND OTHER EASEMENT AREAS.

IT SHALL BE THE RESPONSIBLITY OF THE OWNER TO ENSURE THAT ANY CHANGES OR MODIFICATIONS TO THE PROJECT OR ANY UNIT ARE IN COMPLIANCE WITH THE ORIGINAL CITY CONDITIONS OF APPROVAL OF THE PROJECT, WHICH ARE HEREBY INCORPORATED HEREIN AS SET FORTH IN FULL.

PLANNING DIVISION

DEFENSE AND INDEMNITY

A. AS PART OF, AND IN CONNECTION, WITH THIS APPLICATION TO THE CITY OF MORGAN HILL, APPLICANT AGREES TO DEFEND, INDEMIFY, AND HOLD HARMLESS THE CITY OF MORGAN HILL, ITS OFFICERS, AGENTS, EMPLOYEES, OFFICIALS AND REPRESENTATIVES (INDEMNITEES) FROM AND AGAINST ANY AND ALL CLAIMS, ACTIONS, OR PROCEEDINGS ARISING FROM ANY SUIT FOR DAMAGES OR FOR EQUITABLE OR INJUNCTIVE RELIEF WHICH IS FILED AGAINST CITY TO ATTACK, SEET ASIDE, VOID OR ANNUL ITS APPROVAL OF THIS APPLICATION OR ANY RELATED DECISION, OR THE ADOPTION OF ANY ENVIRONMENTAL DOCUMENTS WHICH RELATES TO SAID APPROVAL THE CITY SHALL PROMPTLY NOTIFY THE APPLICANT OF ANY SUCH CLAIM, ACTION OR PROCEEDING AND THE CITY SHALL COOPOERATE FULLY IN THE DEFENSE THREEOF. IN THE EVENT THAT APPLICANT IS REQUIRED TO DEFEND INDEMNITEES IN CONNECTION WITH THE PROCEEDING, INDEMNITIEES SHALL RETAIN THE RIGHT TO APPROVE (A) THE COUNSEL TO SO DEFEND INDEMNITEES; (B) ALL SIGNIFICANT DECISIONS CONCERNING THE MANNER IN WHCIH THE DEFENSE IS CONDUCTED; AND (C) ANY AND ALL SETTLEMENTS, WHICH APPROVAL SHALL NOT BE UNREASONABLY WITHHELD. THIS INDEMNIFICATION SHALL INCLUDE, BUT IS NOT LIMITED TO, (A) ALL PRE-TENDER LITIGATION COSTS INCURRED ON BEHALF OF THE CITY, INCLUDING CITY'S ATTORNEY'S FEES AND ALL OTHER LITIGATION COSTS AND EXPENSES, INCLUDING EXPERT WITNESSES, REQUIRED TO DEFEND AGAINST ANY LAWSUIT BROUGHT AS A RESULT OF CITY'S APPROVAL OR APPROVALS; (B) REASONABLE INTERNAL CITY ADMINISTRATIVE COSTS, INCLUDING BUT NOT LIMITED TO STAFF TIME AND EXPENSE SPENT ON THE LITIGATION, AFTER TENDER IS ACCEPTED; AND (C) ALL DAMAGES, COSTS EXPENSES, ATTORNEY FEES OR EXPERT WITNESS FEES THAT MAY BE AWARDED TO THE PREVAILING PARTY ARISING OUT OF OR IN CONNECTION WITH THE APPROVAL OF THE APPLICATION OR RELATED DECISION. CITY MAY, IN ITS SOLE DISCRETION, PARTICIPATE IN THE DEFENSE OF SUCH ACTION; BUT SUCH PARTICIPATION SHALL NOT RELIEVE APPLICANT OF TIS OBLICATIONS UNDER THIS CONDITION. THE UNDERSIGNED HEREBY REPRESENTS THAT THEY ARE THE APPLICANT OR ARE FULLY EMPOWERED BY THE APPLICANT AS THEIR AGENT TO AGREE TO PROVIDE THE INDEMNIFICATION, DEFENSE AND HOLD HARMLESS OBLIGATIONS,AND THE SIGNATURE BELOW RESPRESENTS THE UNCONDITIONAL AGREEMENT BY APPLICANT TO BE BOUND BY SUCH CONDITIONS.

TIME LIMITS

A. TERM: THE DESIGN PERMIT APPROVAL GRANTED PURSUANT TO THIS APPROVAL CERTIFICATE SHALL REMAIN IN EFFECT FOR TWO YEARS TO APRIL 13, 2023. FAILURE TO OBTAIN BUILDING PERMITS WITHIN THIS TERM SHALL RESULT IN TERMINATION OF APPROVAL UNLESS AN EXTENSION OF TIME IS GRANTED WITH A SHOWING OF JUST CAUSE PRIOR TO EXPIRATION DATE. (MHMC 18.104.210)

B. TERM: THE TENTATIVE PARCEL MAP APPROVAL GRANTED PURSUANT TO THIS APROVAL CERTIFICATE SHALL REMAIN IN EFFECT FOR TWO YEARS TO APRIL 13, 2023. FAILURE TO APPLY FOR FINAL MAP APPROVAL WITH THE CITY ENGINEER WITHIN THIS TERM SHALL RESULT IN EXPIRATION OF APPROVAL UNLESS AN EXTENSION OF TIME IS GRANTED BY THE DEVELOPMENT SERVICES DEPARTMENT PRIOR TO THE EXPIRATION DATE. (MHMC 18.104.210)

SITE DEVELOPMENT

A. FINAL SITE DEVELOPMENT PLANS: FINAL SITE DEVELOPMENT PLANS SHALL BE REVIEWED FOR CONFORMANCE WITH (SR2020-0014) AND IN ACCORDANCE WITH MORGAN HILL MUNICIPAL CODE SECTION 18.108.040 (DESIGN PERMIT) AND APPROVED BY THE DEVELOPMENT SERVICES DEPARTMENT PRIOR TO ISSUANCE OF A BUILDING PERMIT. ALL SUCH PLANS SHALL INCLUDE:
1. DETAIL DEPICTING ALL CONCRETE CURBS AS FULL FORMED.
2. PROVISION OF CATALOGUE DRAWINGS DEPICTING THE PROPOSED PARKING AREA LIGHTING FIXTURES. EXTERIOR LIGHTING OF THE BUILDING AND SITE SHALL BE DESIGNED SO THAT LIGHTING IS NOT DIRECTED ONTO ADJACENT PROPERTIES AND LIGHT SOURCE IS SHIELDED FROM DIRECT OFF-SITE VIEWING.
3. RAMPS, SPECIAL PARKING SPACES, SIGNING AND OTHER PHYSICAL FEATURES FOR THE DISAABLED, SHALL BE PROVIDED THROUGHOUT THE SITE FOR ALL PUBLICLY USED FACILITIES.
4. ALL MECHANICAL EQUIPMENT, INCLUDING ELECTRICAL AND GAS METERS, POST INDICATOR VALVE, BACKFLOW PREVENTION DEVICES ETC., SHALL BE ARCHITECTURALLY SCREENED FROM VIEW OR LOCATED INTERIOR TO THE BUILDING. ALL GROUND MOUNTED UTILITY APPURTENANCES SUCH AS TRANSFOMERS SHALL NOT BE VISIBLE FROM ANY PUBLIC RIGHT-OF-WAY AND SHALL BE ADEQUATELY SCREENED THROUGH THE USE OR COMBINATION OF CONCRETE OR MASONRY WALLS, BERMING, AND LANDSCAPING (MHARH p20, 45, 79) FOR ADDITIONAL SCREENING, BACKFLOW PERVENTERS SHALL BE PAINTED DARK GREEN, EXCEPT THE FIRE CONNECTION WHICH SHALL BE PAINTED YELLOW.
5. ALL EXISTING ON-SITE OVERHEAD UTILITIES SHALL BE PLACED UNDERGROUND IN AN APPROVED CONDUIT FROM THE SERVICE CONNECTION AT THE STREET OR AT THE PROPERTY LINE TO THE SERVICE CONNECTION AT THE BUILDING.

B. BICYCLE PARKING. THE PROJECT SHALL PROVIDE SHORT-TERM AND LONG-TERM BICYCLE PARKING SPACES IN CONFORMANCE WITH SECTION 18.72.080 AND TABLE 18.72-7 OF THE MORGAN HILL MUNICIPAL CODE:

TABLE 18.72-7: REQUIRED BICYCLE PARKING SPACES

LAND USE	REQUIRED BICYCLE PARKING SPACES	
	SHORT-TERM SPACES	LONG-TERM SPACES
MULTI-FAMILY DWELLINGS	10 PERCENT OF REQUIRED AUTOMOBILE SPACES; MINIMUM OF 4 SPACES	1 PER 5 UNITS

1. SHORT-TERM/CLASS II BICYCLE PARKING STANDARDS. SHORT-TERM BICYCLE PARKING SHALL BE LOCATED WITHIN ONE HUNDRED FEET OF THE PRIMARY ENTRANCE OF THE STRUCTURE OR USE IT IS INTENDED TO SERVE.
2. LONG-TERM BICYCLE PARKING STANDARDS. THE FOLLOWING STANDARDS APPLY TO LONG-TERM BICYCLE PARKING:
   A. LOCATION. LONG-TERM BICYCLE PARKING SHALL BE LOCATED ON OR WITHIN SEVEN HUNDERED FIFTY FEET OF THE USE THAT IT IS INTENDED TO SERVE.
   B. SECURITY. LONG-TERM BICYCLE PARKING SPACES SHALL BE SECURED. SPACES ARE CONSIDERED SECURED IF THEY ARE:
      i. IN A LOCKED ROOM OR AREA ENCLOSED BY A FENCE WITH A LOCKED GATE;
      ii. WITHIN VIEW OR WITHIN ONE HUNDRED FEET OF AN ATTENDANT OR SECURITY GUARD;
      iii. IN AN AREA THAT IS MONITORED BY A SECURITY CAMERA; OR
      iv. VISIBLE FROM EMPLOYEE WORK AREAS.
3. PARKING SPACE DIMENSIONS.
   a. MINIMUM DIMENSIONS OF TWO FEET SHALL BE PROVIDED FOR EACH BICYCLE PARKING SPACE.
   b. AN AISLE OF AT LEAST FIVE FEET SHALL BE PROVIDED BEHIND ALL BICYCLE PARKING TO ALLOW ROOM FOR MANEUVERING.
   c. 2 FEET OF CLEARANCE SHALL BE PROVIDED BETWEEN BICYCLE PARKING SPACES AND ADJACENT WALLS, POLLS, LANDSCAPING, PEDESTRIAN PATHS, AND OTHER SIMILAR FEATURES.
   d. FOUR FEET OF CLEARANCE SHALL BE PROVIDED BETWEEN BICYCLE PARKING SPACES AND ADJACENT AUTOMOBILE PARKING SPACES AND DRIVE AISLES.
4. RACK DESIGN. BICYCLE RACKS MUST BE CAPABLE OF LOCKING BOTH THE WHEELS AND THE FRAME OF THE BICYCLE AND OF SUPPORTING BICYCLES IN AN UPRIGHT POSITION.
5. COVER. REQUIRED COVER FOR BICYCLE PARKING SPACES SHALL BE PERMANENT, DESIGNED TO PROTECT THE BICYCLE FROM RAINFALL, AND AT LEAST SEVEN FEET ABOVE THE FLOOR OR GROUND.

THE LOCATION OF ALL BICYCLE PARKING SPACES SHALL BE IDENTIFIED PRIOR TO ISSUANCE OF A BUILDING PERMIT.

C. STREET NAMES: STREET NAMES, PRIVATE OR OTHERWISE, USED TO IDENTIFY BUILDING LOCATIONS SHALL BE SUBMITTED AT BUILDING PERMIT STAGE TO THE PLANNING DIVISION FOR APPROVAL. PROPOSED STREET NAMES SHALL COMPLY WITH THE STREET NAMING POLICY APPROVED BY CITY COUNCIL (RESOLUTION NO. 4601).

D. TREE PROTECTION: UNLESS TREE REMOVAL HAS BEEN PREVIOUSLY APPROVED, ALL TREES LOCATED WITHIN 25 FEET OF ANY SITE DISTURBANCE SHALL BE PROTECTED USING THE FOLLOWING MINIMUM PROTECTION MEASURES (THESE GUIDELINES SHALL BE INCLUDED WITH ALL SITE DEVELOPMENT PLANS):
1. MARK ALL TREES TO BE SAVED WITH A SURVEY FLAG OR RIBBON. DO NOT NAIL OR STAPLE DIRECTLY TO THE TREE.
2. ERECT A TEMPORARY FENCE ENCLOSING AN AREA EQUAL TO AT LEAST THE DRIPLINE OF THE TREE (OR AS FAR FROM THE TRUNK AS POSSIBLE). THIS TREE PROTECTION ZONE SHALL NOT BE USED FOR PARKING, STORAGE OF BUILDING MATERIALS, OR OTHER EQUIPMENT OR THE PLACEMENT OF TEMPORARY OR PERMANENT FILL. SIGNS SHOULD BE POSTED IDENTIFYING THE RESTRICTION OF USES IN THE TREE PROTECTION ZONE.
3. LOCATE STRUCTURES, GRADE CHANGES, AND OTHER GROUND OR SURFACE DISTURBANCES (e.g. CONCRETE POURS) AS FAR AS FEASIBLE FROM THE "DRIPLINE" ARE OF THE TREE.
4. AVOID ROOT DAMAGE THROUGH GRADING, TRENCHING, AND COMPACTION, AT LEAST WITHIN AN AREA 1.5 TIMES THE DRIPLINE AREA OF THE TREE. WHERE ROOT DAMAGE CANNOT BE AVOIDED, ROOTS ENCOUNTERED OVER 1 INCH IN DIAMETER SHOULD BE EXPOSED APPROXIMATELY 12 INCHES BEYOND THE AREA TO BE DISTURBED (TOWARDS THE TREE STEM), BY HAND EXCAVATION, OR WITH SPECIALIZED HYDRAULIC OR PNEUMATIC EQUIPMENT, CUT CLEANLY WITH HAND PRUNERS OR POWER SAW AND IMMEDIATELY BACK-FILLED WITH SOIL. AVOID TEARING OR OTHERWISE DISTURBING THAT PORTION OF THE ROOTS TO REMAIN.
5. THE ADDITION OF PLANT OR OTHER LANDSCAPING MATERIALS SHALL REMAIN OUTSIDE OF THE DRIP LINE OF ALL TREES.
6. ALL TREES PROPOSED TO BE REMOVED FROM THE PROJECT SITE SHALL BE REPLACED AT A 1:1 RATIO. REPLACEMENT TREES SHALL BE CONSISTENT WITH THE CITY OF MORGAN HILL MASTER STREET TREE. ALL REPLACEMENT TREES SHALL BE SHOWN ON THE LANDSCAPE PLANS AND APPROVED BY THE DEVELOPMENT SERVICES DIRECTOR PRIOR TO THE ISSUANCE OF THE BUILDING/GRADING PERMIT.
7. ANY TREE SUBJECT TO CHAPTER 12.32 RESTRICTIONS ON REMOVAL OF SIGNIFICANT TREES OF THE MORGAN HILL MUNICIPAL CODE REQUIRES APPROVAL FROM THE DPLANNING DIVISION. THE APPLICANT SHALL REQUEST APPROVAL PRIOR TO REMOVING ANY SIGNIFICANT TREES.

E. NOISE: IN ORDER TO COMPLY WITH THE GENERAL PLAN 60 db DNL EXTERIOR NOISE LEVEL STANDARD, TRAFFIC NOISE BARRIERS MEASURING SIX FEET IN HEIGHT RELATIVE TO THE REAR PATIO ELEVATION, ADJACENT TO TENNANT AVENUE, SHALL BE CONSTRUCTED AT THE UNITS NEAREST TENNANT AVENUE, AS SHOWN IN FIGURE 2 OF THE NOISE STUDY (APPENDIX D OF THE CATEGORICAL EXEMPTION MEMORANDUM). TRAFFIC NOISE BARRIERS SHALL ABE IDENTIFIED ON SITE DEVELOPMENT PLANS AND BUILDING PERMIT PLANS PRIOR TO ISSUANCE OF A BUILDING PERMIT.
1. THE RECOMMENDED NOISE BARRIERS COULD TAKE THE FORM OF A SOLID MASONRY WALL OR WOOD FENCE.
2. SHOULD THE CONSTRUCTION OF A WOOD FENCE BE SELECTED AS A BARRIER, THE FENCE SLATS SHOULD OVERLAP BY A MINIMUM OF 2 INCHES AND BE SCREWED TO THE FRAMING RATHER THAN NAILED. THE PURPOSE OF THE OVERLAPPING SLATS AND USING SCREWS RATHER THAN NAILS IS TO ENSURE THAT PROLONGED EXPOSURE TO THE ELEMENTS DOES NOT RESULT IN VISIBLE GAPS THROUGH THE SLATS WHICH WOULD RESULT IN REDUCED NOISE BARRIER EFFECTIVENESS.

BUILDING DESIGN

A. ROOF MOUNTED MECHANICAL EQUIPMENT: ALL ROOF MOUNTED MECHANICAL EQUIPMENT SHALL BE PLACED WITHIN A SCREENED ROOF TOP ENCLOSURE DEPICTED ON THE ELEVATION DRAWINGS OR LOCATED BELOW THE PARAPET LEEL AND SHALL NOT BE VISIBLE FROM THE GROUND AT ANY DISTANCE FROM THE BUILDING. CROSS SECTION ROOF DRAWINGS SHALL BE PROVIDED AT THE BUILDING PERMIT STAGE INDICATING THE RELATIVE HEIGHT OF THE SCREEN WALL OR PARAPET. MINIMUM SCREEN HEIGHT OR PARAPET DEPTH SHALL BE 5 FEET OR GREATER TO MATCH THE HEIGHT OF ANY PROPOSED EQUIPMENT. (MHARH p.48, 65, 87, 106)

B. BUILDING MOUNTED LIGHTING: LIGHTING FIXTURES SHALL NOT PROJECT ABOVE THE FACIA OR ROOFLINE OF THE BUILDING. ANY GROUND MOUNTED LIGHTING PROJECTING ONTO THE BUILDING OR SITE SHALL BE SUBJECT TO THE REVIEW AND APPROVAL OF THE DEVELOPMENT SERVICES DIRECTOR. ADJUSTMENT TO THE LIGHTING INTESITY MAY BE REQUIRED AFTER THE COMMENCEMENT OF THE USE (MHARH p. 67, 109)

C. ARCHITECTURAL ELEMENTS: A FINAL SITE DEVELOPMENT PLAN SHALL ABE PROVIDED AT THE BUILDING PERMIT STAGE FOR REVIEW AND APPROVAL TO THE DEVELOPMENT SERVICES DIRECTOR PRIOR TO ISSUANCE OF A BUILDING PERMIT.
1. ALL VENTS, GUTTERS, DOWNSPOUTS, FLASHING, ELECTRICAL CONDUITS, ETC. SHALL BE PAINTED TO MATCH THE COLOR OF THE ADJACENT SURFACE OR OTHERWISE DESIGNED IN HARMONY WITH THE BUILDING EXTERIOR.
2. SOFFITS AND OTHER ARCHITECTURAL ELEMENTS VISIBLE FROM VIEWE BUT NOT DETAILED ON THE PLANS SHALL BE FINISHED IN A MATERIAL IN HARMONY WITH THE EXTERIOR OF THE BUILDING.

PARKING, VEHICULAR ACCESS AND LANDSCAPING

A. PARKING LOT LANDSCAPING: ALL LANDSCAPING WITHIN PARKING LOTS SHALL COMPLY WITH THE REQUIREMENTS OF CHAPTER 18.72 (LANDSCAPING) IN ADDITION TO THE STANDARDS WITHIN THIS SECTION.

1. INTERIOR LANDSCAPING. ALL AREAS WITHIN A PARKING LOT NOT UTILIZED FOR PARKING SPACES OR ACCESS/CIRCULATION SHALL BE LANDSCAPED. FOR PARKING LOTS WITH MORE THAN FIFTEEN SPACES, THE MINIMUM AMOUNT OF INTERIOR LANDSCAPING IS SPECIFIED IN TABLE 18.72-6. INTERIOR LANDSCAPING IS DEFINED AS ANY LANDSCAPED AREA SURROUNDED ON AT LEAST TWO SIDES BY PARKING SPACES OR DRIVE AISLES, AND EXCLUDING AREAS AROUND THE PERIMETER OF THE PARCEL OR DEVELOPMENT SITE.

TABLE 18.72-6: MINIMUM REQUIRED PARKING LOT LANDSCAPING

NUMBER OF REQUIRED PARKING SPACES	PERCENT OF SURFACE PARKING AREA TO BE LANDSCAPED
16-30	10 PERCENT
31-60	15 PERCENT
OVER 60	20 PERCENT

2. SHADE TREES
   a. ONE SHADE TREE SHALL BE PROVIDED FOR EVERY FIVE PARKING SPACES IN A PARKING LOT.
   b. SHADE TREES SHALL BE A MINIMUM TWENTY-FOUR-INCH BOX IN SIZE AND SHALL PROVIDE A MINIMUM THIRTY-FOOT CANOPY AT MATURITY.
   c. SHADE TREES SHALL BE OF A TYPE THAT CAN REACH MATURITY WITHIN FIFTEEN YEARS OF PLANTING AND SHALL BE SELECTED FROM A CITY-RECOMMENDED LIST OF CANOPY TREE SPECIES.
   d. SHADE TREES SHALL BE ARRANGED IN A PARKING LOT TO PROVIDE MAXIMUM SHADE COVERAGE (BASED ON A THIRTY-FOOT CANOPY) ON AUGUST 21. THE ARRANGEMENT SHOULD APPROXIMATE NEARLY FIFTY PERCENT SHADE COVERAGE.
3. CONCRETE CURBS
   a. ALL LANDSCAPE AREAS SHALL BE SEPARATED FROM PARKING SPACES, DRIVE AISLES AND DRIVEWAYS BY A CONTINUOUS, RAISED CONCRETE CURB. RAISED CONCRETE CURBS SHALL BE A MINIMUM OF SIX INCHES HIGH BY FOUR INCHES DEEP.
   b. THE CITY MAY APPROVE ALTERNATIVES TO RAISED CONCRETE CURBS AS NEEDED TO COMPLY WITH ANY MANDATORY STORMWATER DRAINAGE STANDARDS.
4. PARKING SPACE LANDSCAPING. A MAXIMUM OF TWO FEET AT THE FRONT END OF A PARKING SPACE MAY BE LANDSCAPED WITH LOW SHRUBS OR GROUND COVER IN WHICH A VEHICLE COULD EXTEND OVER IN LIEW OF PAVING SURFACE. THIS LANDSCAPING MAY NOT COUNT TOWARD MINIMUM REQUIRED PARKING LOT LANDSCAPED AREA.
5. TIMING. LANDSCAPING SHALL BE INSTALLED PRIOR TO THE CITY'S AUTHORIZATION TO OCCUPY ANDY BUILDINGS SERVED BY THE PARKING AREA, OR PRIOR TO THE FINAL INSPECTION FOR THE PARKING LOT.
6. GREEN PARKING EXEMPTIONS. PARKING LOTS THAT INCORPORATE SOLAR PANELS, BIOSWALES, AND OTHER SIMILAR GREEN FEATURES NOT OTHERWISE REQUIRED BY POST CONSTRUCTION STORMWATER REQUIREMENTS ARE ELIGIBLE FOR REDUCED PARKING LOT LANDSCAPING REQUIREMENTS WITH THE APPROVAL OF A CONDITIONAL USE PERMIT.

B. PLANTING AND IRRIGATION WORKING DRAWINGS: DETAILED LANDSCAPE PLANTING AND IRRIGATION WORKING DRAWINGS SHALL BE SUBMITTED TO THE DEVELOPMENT SERVICES DIRECTOR FOR APPROVAL PRIOR TO ISSUANCE OF BUILDING PERMITS. LANDSCAPE PLANS FOR STREETS AND LANDSCAPE EASEMENTS SHALL BE PART OF THE IMPROVEMENT PLAN SUBMITTAL.

C. LIGHTING: WALKWAYS AND PEDESTRIAN PATHWAYS IN LANDSCAPED AREAS OR COMMON AREAS NOT CONSIDERED BUILDING FENTRANCES OR A PART OF PARKING LOT AREAS SHALL BE ILLUMINATED WITH A MINIMUM OF ONE (1) FOOT-CANDLE TO ENSURE SAFE NIGHTTIME CONDITIONS. (MHARH p.30, 67, 108)
1. A FINAL PHOTOMETRIC PLAN SHALL BE PROVIDED AT THE BUILDING PERMIT STAGE FOR REVIEW AND APPROVAL TO THE DEVELOPMENT SERVICES DIRECTOR PRIOR TO ISSUANCE OF A BUILDING PERMIT.

D. MAINTENANCE OF LANDSCAPING: THE LANDSCAPING INSTALLED AND ACCEPTED WITH THIS PROJECT SHALL BE MAINTAINED ON THE SITE AS STATED WITHIN THE APPROVED PLANS. ANY ALTERATION OR MODIFICATION TO THE LANDSCAPING SHALL NOT BE PERMITTED UNLESS OTHERWISE APPROVED BY THE DEVELOPMENT SERVICES DIRECTOR.

E. WATER CONSERVING LANDSCAPE ORDINANCE: THE LANDSCAPE PLANS SHALL BE IN CONFORMANCE WITH THE CITY'S WATER CONSERVING LANDSCAPE ORDINANCE THAT WAS DEVELOPED IN ACCORDANCE WITH THE CALIFORNIA LAW. THIS ORDINANCE RESTRICTS LANDSCAPING TURF TO CERTAIN AREAS, SPECIFIES PLANT SELECTION, REQUIRES CERTAIN TYPES OF IRRIGATION EQUIPMENT, AND CALLS FOR THE DEVELOPMENT OF COMPREHENSIVE WATER USE CALCULATIONS AS AN ASPECT OF THE SUBMITTED LANDSCAPE PLANS (MHMC 18.64)

SIGNS

A. SEPARATE APPLICATION REQUIRED FOR SIGN APPROVAL: SIGNS PROPOSED FOR THIS DEVELOPMENT SHALL BE DESIGNED IN CONFORMANCE WITH THE SIGN ORDINANCE AND SHALL REQUIRED SEPARATE APPLICATION AND APPROVAL BY THE PLANNING DIVISION PRIOR TO INSTALLATION OF ANY SIGNS.

B. DIRECTORY SIGNS REQUIRED: DIRECTORY SIGN(S) AND LOCATION MAP(S) SHALL BE PROVIDED FOR APARTMENT, CONDOMINIUM, OR TOWNHOUSE PROJECTS PRIOR TO OCCUPANCY. LOCATION OF THE SIGNS(S) SHALL BE INTERIOR TO THE PROJECT AND DESIGN OF THE DIRECTORY SIGN(S) SHALL BE APPROVED BY THE PLANNING DIVISION AND FIRE DEPARTMENT PRIOR TO ISSUANACE OF BUILDING PERMITS (MHARH p.61)

HABITAT PLAN

A. FEES: THE APPROVED PROJECT IS COVERED PURSUANT TO THE SANTA CLARA VALLEY HABITAT PLAN (HABITAT PLAN) AND SUBJECT TO FEES AND CONDITIONS CONTAINED IN THE HABITAT PLAN.

B. APPLICATION PACKAGE: PRIOR TO ISSUANCE OF A GRADING PERMIT, THE PROJECT SHALL COMPLETE AND SUBMIT A HABITAT PLAN APPLICATION PACKAGE. ALL FEES SHALL BE PAID PRIOR TO ISSUANCE OF A GRADING PERMIT. (MHMC 18.132)

C. CONDITIONS: ANY ADDITIONAL CONDITIONS OR MITIGATIONS REQUIRED BY THE HABITAT PLAN SHALL BE CLEARLY STATED ON ALL PLANS THAT INVOLVE ANY GROUND DISTURBING ACTIVITY (i.e., GRADING PLANS, IMPROVEMENT PLANS, PAVING PLANS DEMOLITION PLANS OR OTHER PLANS FOR SITE CLEARING OR TEMPORARY STOCKPILE OF DIRT. (MHMC 18.132)

AIR QUALITY

A. DUST, NOISE, VIBRATION AND MATERIALS MANAGEMENT PLAN: A MANAGEMENT PLAN DETAILING STRATEGIES FOR CONTROL OF NOISE, DUST AND VIBRATION, AND STORAGE OF HAZARDOUS MATERIALS DURING CONSTRUCTION OF THE PROJECT SHALL BE SUBMITTED FOR REVIEW PRIOR ISSUANCE OF A GRADING PERMIT AND REQUIREMENTS SHALL BE INCLUDED ON ALL SITE DEVELOPMENT AND GRADING PLANS. THE INTENT OF THIS CONDITION IS TO MINIMIZE CONSTRUCTION RELATED DISTURBANCE OF RESIDENTS OF THE NEARBY OR ADJACENT PROPERTIES. (MHMC 18.76)
1. ALL EXPOSED SURFACES SHALL BE WATERED AT A FREQUENCY ADEQUATE TO MAINTAIN MINIMUM SOIL MOISTURE OF 12 PERCENT. MOISTURE CONTENT CAN BE VERIFIED BY LAB SAMPLES OR MOISTURE PROBE.
2. ALL EXCAVATION, GRADING, AND/OR DEMOLITION ACTIVITIES SHALL BE SUSPENDED WHEN AVERAGE WIND SPEEDS EXCEED 20 MPH.
3. WIND BREAKS (e.g., TREES, FENCES) SHALL BE INSTALLED ON THE WINDWARD SIDE(S) OF ACTIVELY DISTURBED AREAS OF CONSTRUCTION. WIND BREAKS SHOULD HAVE A MAXIMUYM 50 PERCENT AIR POROSITY.
4. VEGETATIVE GROUND COVER (e.g., FAST-GERMINATING NATIVE GRASS SEED) SHALL BE PLANTED IN DISTURBED AREAS AS SOON AS POSSIBLE AND WATERED APPROPRIATELY UNTIL VEGETATION IS ESTABLISHED.
5. THE SIMULTANEOUS OCCURRENCE OF EXCAVATION, GRADING, AND GROUND DISTURBING CONSTRUCTION ACTIVITIES ON THE SAME AREA AT ANY ONE TIME SHALL BE LIMITED. ACTIVITIES SHALL BE PHASED TO REDUCE THE AMOUNT OF DISTURBED SURFACES AT ANY ONE TIME.
6. ALL TRUCKS AND EQUIPMENT, INCLUDING THEIR TIRES, SHALL BE WASHED OFF PRIOR TO LEAVING THE SITE.
7. SITE ACCESSES TO A DISTANCE OF 100 FEET FROM THE PAVED ROAD SHALL BE TREATED WITH A 6 TO 12-INCH COMPACTED LAYER OF WOOD CHIPS, MULCH, OR GRAVEL.
8. SANDBAGS OR OTHER EROSION CONTROL MEASURES SHALL BE INSTALLED TO PREVENT SILT RUNOFF TO PUBLIC ROADWAYS FROM SITES WITH A SLOPE GRATER THAN ONE PERCENT.
9. MINIMIZING THE IDLING TIME OF DIESEL-POWERED CONSTRUCTION EQUIPMENT TO TWO MINUTES.
10. THE PROJECT SHALL DEVELOP A PLAN DEMONSTRATING THAT THE OFF-ROAD EQUIPMENT (MORE THAN 50 HORSEPOWER) TO BE USED IN THE CONSTRUCTION PROJECT (i.e., OWNED, LEASED, AND SUBCONTRACTOR VEHICLES) WOULD ACHIEVE A PROJECT WIDE FLEET AVERAGE 20 PERCENT NOX REDUCTION AND 45 PERCENT PM REDUCTION COMPARED TO THE MOST RECENT ARB FLEET AVERAGE. ACCEPTABLE OPTIONS FOR REDUCING EMISSIONS INCLUDE THE USE OF LATE MODEL ENGINES, LOW-EMISSION DIESEL PRODUCTS, ALTERNATIVE FUELS, ENGINE RETROFIT TECHNOLOGY, AFTER-TREATMENT PRODUCTS, ADD-ON DEVEICES SUCH AS PARTICULATE FILTERS, AND/OR OTHER OPTIONS AS SUCH BECOME AVAILABLE.
11. USE LOW VOC (i.e., ROG) COATINGS BEYOND THE LOCAL REQUIREMENTS (i.e., REGULATION 8, RULE 3: ARCHITECTURAL COATINGS)
12. REQUIRING THAT ALL CONSTRUCTION EQUIPMENT, DIESEL TRUCKS, AND GENERATORS BE EQUIPPED WITH BEST AVAILABLE CONTROL TECHNOLOGY FOR EMISSION REDUCTIONS OF NOX AND PM.
13. REQUIRING [illegible] EMISSION REDUCTIONS OF NOX AND PM.

CULTURAL RESOURCES

A. SIGNIFICANT HISTORIC OR ARCHAEOLOGICAL MATERIALS: THIS PROJECT HAS BEEN DETERMINED NOT TO BE IN A SITE IDENTIFIED AS ARCHAELOLOGICALLY SENSITIVE BY THE CITY'S ADOPTED ARCHAEOLOGICAL SENSITIVITY MAP, BUT NONETHELESS COULD ADVERSELY IMPACT UNDOCUMENTED HUMAN REMAINS OR UNITENTIONALLY DISCOVER SIGNIFICANT HISTORIC OR ARCHAEOLOGICAL MATERIALS. THE FOLLOWING POLICIES AND PROCEDURES FOR TREATMENT AND DISPOSITION OF INADVERTENTLY DISCOVERED HUMAN REMAINS OR ARCHAEOLOGICAL MATERIALS SHALL APPLY AND SHOULD BE PROVIDED AS STANDARD CONDITIONS ON THE BUILDING PERMIT, GRADING PERMIT, OR IMPROVEMENT PLANS. IF HUMAN REMAINS ARE DISCOVERED. IT IS PROBABLEY THEY ARE THE REMAINS OF NATIVE AMERICANS.
1. IF HUMAN REMAINS ARE ENCOUNTERED THEY SHALL BE TREATED WITH DIGNITY AND RESPECT AS DUE TO THEM. DISCOVERY OF NAVTIVE AMERICAN REMAINS IS A VERY SENSITIVE ISSUE AND SERIOUS CONCERN. INFORMATION ABOUT SUCH A DISCOVERY SHALL BE HELD IN CONFIDENCE BY ALL PROJECT PERSONNEL ON A NEED TO KNOW BASIS. THE RIGHTS OF NATIVE AMERICANS TO PRACTICE CEREMONIAL OBSERVANCES ON SITES, IN LABS AND AROUND ARTIFACTS SHALL BE UPHELD. REMAINS SHOULD NOT BE HELD BY HUMAN HANDS. SURGICAL GLOVES SHOULD BE WORN IF REMAINS NEED TO BE HANDLED. SURGICAL MASK SHOULD ALSO BE WORN TO PREVENT EXPOSURE TO PATHOGENS THAT MAY BE ASSOCIATED WITH THE REMAINS.
2. IN THE EVENT THAT KNOWN OR SUSPECTED NATIVE AMERICAN REMAINS ARE ENCOUNTERED OR SIGNIFICANT HISTORIC OR ARCHAEOLOGICAL MATERIALS ARE DISCOVERED, GROUND-DISTURBING ACTIVEITIES SHALL BE IMMEDIATELY STOPPED. EXAMPLES OF SIGNIFICANT HISTORIC OR ARCHAEOLOGICAL MATERIALS INCLUDE, BUT ARE NOT LIMITED TO, CONCENTRATIONS OF HISTORIC ARTIFACTS (i.e., BOTTLES, CERAMICS) OR PREHISTORIC ARTIFACTS (CHIPPED CHERT OR OBSIDIAN, ARROW POINTS, GROUNDSTONE NORTARS ANE PESTLES), CULTURALLY ALTERED ASH-STAINED MIDDEN SOILS ASSOCIATED WITH PRE-CONTACT NATIVE AMERICAN HABITATION SITES, CONCENTRATIONS OF FIRE-ALTERED ROCK AND/OR BURNED OR CHARRED ORGANIC MATERIALS, AND HISTORIC STRUCTURE REMAINS SUCH AS STONE-LINED BUILDING FOUNDATIONS, WELLS OR PRIVY PITS. GROUND-DISTURBING PROJECT ACTIVITIES MAY CONTINUE IN OTHER AREAS THAT ARE OUTSIDE THE DISCOVERY LOCALE.
3. AN "EXCLUSION ZONE" WHERE UNAUTHORIZED EQUIPMENT AND PERSONNEL ARE NOT PERMITTED SHALL BE ESTABLISHED (i.e., TAPED OFF) AROUND THE DISCOVERY AREA PLUS A REASONABLE BUFFER ZONE BY THE CONTRCTOR FOREMAN OR AUTHORIZED REPRESENTATIVE OR PARTY WHO MADE THE DISCOVERY AND INITIATED THESE PROTOCOLS, OR IF ON-SITE AT THE TIME OR DISCOVERY, BY THE MONITORING ACHAEOLOGIST (TYPICALLY 25-50 FT. FOR SINGLE BURIAL OR ARCHAEOLOGICAL FIND).
4. THE DISCOVERY LOCALE SHALL BE SECURED (e.g., 24-HOUR SURVEILLANCE) AS DIRECTED BY THE CITY OR COUNTY IF CONSIDERED PRUDENT TO AVOID FURTHER DISTURBANCES.
5. THE CONTRACTOR FOREMAN OR AUTHORIZED REPRESENTATIVE, OR PARTY WHO MADE THE DISCOVERY AND INTITATED THESE PROTOCOLS SHALL BE RESPONSIBLE FOR MMEDIATELY CONTACTING BY TELEPHONE THE PARTIES LISTED BELOW TO REPORT THE FIND AND INITIATE THE CONSULTAATION PROCESS FOR TREATMENT AND DISPOSITION:
   - THE CITY OF MORGAN HILL DEVELOPMENT SERVICES DIRECTOR (408) 779-7247
   - THE CONTRACTOR-S POINT(S) OF CONTACT
   - THE CORONER OF THE COUNTY OF SANTA CLARA (IF HUMAN REMAINS FOUND) (408) 793-1900
   - THE NATIVE AMERICAN HERITAGE COMMISSION (NAHC) IN SCRAMENTO (916) 653-4082
   - THE AMAH MUTSUN TRIBAL BAND (916) 481-5785 (H) OR (916) 743-5833 (C)
6. THE CORONER HAS TWO WORKING DAYS TO EXAMINE THE REMAINS AFTER BEING NOTIFIED OF THE DISCOVERY. IF THE REMAINS ARE NATIVE AMERICAN THE CORONER HAS 24 HOURS TO NOTIFY THE NAHC.
7. THE NAHC IS RESPONSIBLE FOR IDENTIFYING AND IMMEDIATELY NOTIFYING THE MOST LIKELY DESCENDENT (MLD) FROM THE AMAH MUTSUN TRIBAL BAND. (NOTE: NAHC POLICY HOLDS THAT THE NATIVE AMERICAN MONITOR WILL NOT BE DESIGNATED THE MLD.)
8. WITHIN 24 HOURS OF THEIR NOTIFICATION BY THE NAHC THE MLD WILL BE GRANTED PERMISSION TO INSPECT THE DISCOVERY SITE IF THEY SO CHOOSE.
9. WITHIN 24 HOURS OF THEIR NOTIFICATION BY THE NAHC, THE MLD MAY RECOMMEND TO THE CITY'S DEVELOPMENT SERVICES DIRECTOR THE RECOMMENDED MEANS FOR TREATING OR DISPOSING, WITH APPROPRIATE DIGNITY, THE HUMAN REMAINS AND ANY ASSOCIATED GRAVE GOODS. THE RECOMMENDATION MAY INCLUDE THE SCIENTIFIC REMOVAL AND NON-DESTRUCTIVE OR DESTRUCTIVE ANALYSIS OF HUMAN REMAINS AND ITEMS ASSOCIATED WITH NATIVE AMERICAN BURIALS. ONLY THOSE OSTEOLOGICAL ANALYSES OR DNA ANALYSES RECOMMENDED BY THE AMAH MUTSUN TRIBAL BAND MAY BE CONSIDERED AND CARRIED OUT.

THESE DRAWINGS ARE THE PROPERTY OF OSITO HOLDINGS, LLC AND ARE INTENDED FOR USE SOLELY ON THE PROJECT TITLED HEREON. THESE DRAWINGS AS PROTECTED UNDER COPYRIGHT LAWS ARE NOT TO BE REPRODUCED IN WHOLE OR PART IN ANY MANNER WITHOUT THE EXPRESSED WRITTEN CONSENT OF THE DESIGNER. USE OF THESE DRAWINGS IS LIMITED TO THE SITE INTENDED AND THEIR USE AT ANY OTHER SITE, OR ON OTHER PROJECTS IS PROHIBITED EXCEPT BY PRIOR WRITTEN CONSENT OF THE DESIGNER. ALL REPRODUCTINS OF THESE DRAWINGS, IN WHOLE OR PART, REMAIN UNDER THE OWNERSHIP OF THE DESIGNER AND SHALL BE RETURNED UPON COMPLETION OF THE PROJECT OR UPON REQUEST OF THE DESIGNER.

COPYRIGHT (C) 2020

OWNER / DEVELOPER:
OSITO HOLDINGS, LLC
P.O. BOX 2827
MESA, AZ 85214
(480) 646 6323

PROJECT:
TENNANT SQUARE
215 TENNANT AVENUE
MORGAN HILL, CA.
COUNTY OF
SANTA CLARA

DRAWING:
TITLE, COVER & GENERAL DATA SHEET

LICENSED ARCHITECT
ZUISHUANG CHEN
NO. C-28156
REN. 5/31/25
STATE OF CALIFORNIA

REVISIONS:
1 02.20.2023 PLAN CHECK RESPONSE
2 02.09.2024 PLAN CHECK RESPONSE

DATE: JUNE 03, 2024
SCALE: AS NOTED
DRAWN BY: G.E.MOORE
PROJ. MGR. G.E.MOORE
PROJECT FILE: 0.20-TENNANT
DRAWING: COA1

APPROVAL CERTIFICATE NO. 21-003 - CONDITIONS OF APPROVAL - STANDARD CONDITIONS - APPLICATION NO: SR2020-0014: TENNANT - OSITO (TENNANT SQUARE) 2

CULTURAL RESOURCES (CONTINUED)

10. IF THE MLD RECOMMENDATION IS REJECTED BY THE CITY OF MORGAN HILL THE PARTIES WILL ATTEMPT TO DEDIATE THE DISAGREEMENT WITH THE NAHC. IF MEDIATION FAILS THEN THE REMAINS AND ALL ASSOCIATED GRAVE OFFERINGS SHALL BE REBURIED WITH APPROPRIATE DIGNITY ON THE PROPERTY IN A LOCATION NOT SUBJECT TO FURTHER SUBSURFACE DISTURBANCE.

GENERAL

A. MITIGATION FEE ACT: NOTICE IS HEREBY GIVEN THAT, PURSUANT TO THE MITIGATION FEE ACT, THE CITY OF MORGAN HILL CHARGES CERTAIN FEES (AS SUCH TERM IS DEFINED IN GOVERNMENT CODE SECTION 66000) IN CONNECTION WITH APPROVAL OF THIS DEVELOPMENT PROJECT FOR THE PURPOSE OF DEFRAYING ALL OR A PORTION OF THE COST OF PUBLIC FACILITIES RELATED TO THIS DEVELOPMENT PROJECT (MITIGATION FEE ACT FEES). THESE FEES DO NOT INCLUDE FEES FOR PROCESSING APPLICATIONS FOR GOVERNMENTAL REGULATORY ACTIONS OR APPROVALS, FEES COLLECTED AS PART OF DEVELOPMENT AGREEMENTS, OR AS A PART OF THE APPLICATION FOR THE CITY'S RESIDENTIAL DEVELOPMENT CONTROL SYSTEM. THE MITIGATION FEE ACT FEES APPLYING TO THIS PROJECT ARE LISTED IN THE SCHEDULE OF FEES TO BE PROVIDED AT BUILDING PERMIT STAGE. NOTICE IS ALSO HEREBY GIVEN THAT THE DEVELOPER HAS AN OPPORTUNITY TO PROTEST THE IMPOSITION OF THE MITIGATION FEE ACT FEES WITHIN 90 DAYS OF THE APPROVAL OR CONDITIONAL APPROVAL OF THIS DEVELOPMENT PROJECT AND TAHT THE 90-DAY PROTEST PERIOD HAS BEGUN.

B. COVENANTS, CONDITIONS AND RESTRICTIONS: THE APPLICANT SHALL PROVIDE A SET OF COVENANTS, CONDITIONS AND RESTRICTIONS (CC&R's), BYLAWS AND ARTICLES OF INCORPORATION, FOR REVIEW AND APPROVAL BY THE DEPARTMENT SERVICES DIRECTOR PRIOR TO FINAL OCCUPANCY OR RECORDATION OF A FINAL MAP. ALL SUCH CC&R's SHALL INCLUDE THE FOLLOWING:

1. THE OWNERS RECOGNIZE THAT THE USE, MODIFICAITON AND PROPER MAINTENANCE OF THE COMMON AREA AND PUBLIC RIGH-OF-WAY(S)* ARE FOR THE BENEFIT OF ALL CITIZENS OF THE CITY OF MORGAN HILL (CITY) AND THAT THE CITY IS AN INTENDED THIRD-PARTY BENEFICIARY OF THESE COVENANTS, CONDITIONS AND RESTRICTIONS AND MAY, UPON NOTICE OF HEARING AS SET FORTH BELOW, EXERCISE THE SAME POWERS OF ENFORCEMENT AS THE ASSOCIATION.

   *PUBLIC RIGH-OF-WAY: EXCLUSIVE OF STREETS DEDICATED TO AND ACCEPTED BY THE CITY OF MORGAN HILL

2. THE CITY MAY, BY MAIL OR PERSONAL DELIVERY, GIVE WRITTEN NOTICE OF THE BREACH OF ANY MAINTENANCE OBLICATION TO THE ASSOCIATION WITH A DEMAND THAT SUCH BREACH BE REMEDIED. IF SUCH BREACH IS NOT REMEDIED WITHIN THIRTY (30) DAYS OF THE MAILING OR DELIVERY OF SUCH NOTICE, THE CITY SHALL HAVE STANDING AND THE RIGHT (BUT NOT THE OBLIGATION) TO BRING A COURT ACTION AGAINST THE ASSOCIATION AND OWNERS TO ENFORCE SUCH PROVISION. IN ADDITION, THE CITY SHALL BE ENTITLED TO RECOVER REASONABLE ATTORNEYS' FEES AND COSTS INCURRED IN SUCH ACTION.
3. THE NOTICE MAY ALSO CONTAIN A DATE FOR A HEARING ON THE MATTER BEFORE A CITY EMPLOYEE DESIGNATED BY THE CITY (WHICH HEARING SHALL BE HELD NO SOONER THAN FIFTEEN (15) DAYS AFTER MAILING OF SUCH NOTICE), AND IF AFTER SUCH HEARING THE CITY DETERMINES THAT THERE HAS BEEN INADEQUATE MAINTENANCE, THE CITY SHALL HAVE THE RIGHT (BUT NOT THE OBLIGATION) TO UNDERTAKE THE MAINTENANCE OF THE COMMON AREA OR PUBLIC RIGHT-OF-WAY IN QUESTION. ANY AND ALL COST INCURRED BY THE CITY IN SO MAINTAINING THE COMMON AREA OR PUBLIC RIGHT-OF-WAY SHALL ABE A LIEN AGAINST ALL THE PROPERTIES INCLUDED WITH THE PROJECT AND SHALL BE THE PERSONAL RESPONSIBILITY OF THE OWNERS AND THE ASSOCIATION.
4. THE ENTIRE PROJECT AND ALL OF THE PROPERTIES LOCATED THEREON SHALL BE SUBJECT TO THE CONDITIONS AND RESTRICTIONS OF ALL SUBDIVISION AND OTHER PROJECT APPROVALS BY THE CITY, WITH RESPECT TO THE PROJECT. ANY CHANGES AND/OR MODIFICATIONS TO THE PROJECT AND/OR ANY UNIT, INCLUDING BUT NOT LIMITED TO CHANGES TO THE EXTERIOR OF ANY UNIT, MAY BE SUBJECT TO REVIEW AND APPROVAL OF THE CITY OF MORGAN HILL AS MAY BE DETERMINED BY REVIEW OF THE PROJECT APPROVALS BY THE CITY OF MORGAN HILL.
5. THIS SECTION MAY NOT BE AMENDED WITHOUT THE PRIOR WRITTEN CONSENT OF THE DEVELOPMENT SERVICES DIRECTOR FOR THE CITY. NOTHING CONTAINED IN THIS SECTION SHALL LIMIT ANY OTHER RIGHT OR REMEDY WHICH THE CITY MAY HAVE UNDER ITS ORDINANCES OR STATE LAW.
6. FOR THE PURPOSES OF THIS SECTION, THE QUESTION OF WHETHER THERE HAS BEEN A BREACH OF A MAINTENANCE OBLIGATION OR ADEQUATE MAINTENANCE SHALL BE DETERMINED BY THE PROVISIONS OF THE ORIGINAL DECLARATION AS FIRST RECORDED WITH THE COUNTY RECORDER FOR SANTA CLARA COUNTY AND BY ANY AMENDMENT THERETO, BUT ONLY TO THE EXTENT THAT SUCH MAINTENANCE OBLIGATION OR DUTY OF MAINTENANCE IS INCREASED BY SUCH AMENDMENT.

C. SIGNED COPIES OF APPROVAL CERTIFICATE: SUBMIT TWO (2) SIGNED COPIES OF THE APPROVAL CERTIFICATE 21-003 TO THE PLANNING DIVISION PRIOR TO ISSUANCE OF A BUILDING PERMIT.

ENGINEERING DIVISION

A. RIGHT-OF-WAY: DEDICATE TO THE CITY IN FEE TITLE STREET RIGH OF WAY ALONG THE PROPERTY FRONTAGE TO STREET CENTERLINE.

B. SWRMP: AT BUILDING PERMIT STAGE, SUBMIT A REVISED STORMWATER RUNOFF MANAGEMENT PLAN (SWRMP) THAT MATCHES THE UPDATED SWRMP TEMPLATE.

a. REQUEST FROM ENGINEERING UNIQUE BMP/SCM IDENTIFIERS TO BE USED ON PROJECT'S STORM WATER CONTROL MEASURE (SCM) PLAN.
b. PROVIDE BMPRAM INVENTORY DATA REPORT SHEET FOR EACH TREATMENT BMP.
c. PROVIDE SCM PLAN.
d. PROVIDE PLAT AND LEGAL DESCRIPTION OF AREA ON PROPERTY, WHICH WILL REQUIRE MAINTENANCE OF THE POST CONSTRUCTION BMP's FOR STORMWATER OPERATION AND MAINTENANCE AGREEMENT.

C. STORMWATER TREATMENT: AT EACH STORM DRAIN LINE DRAINING INTO PRIMARY UDNERGROUND STORMWATER RETENTION/DETENTION TANKS, DRAINAGE SHALL BE INTERCEPTED BY A JUNCTION STRUCTURE WHICH WILL CAPTURE SILT AND DEBRIS BEFORE ENTERING UNDERGROUND TANKS.

D. WATER

a. DOMESTIC: THE MINIMUM WATER LATERAL SIZE SHALL BE 6 INCH; MANIFOLD TOTALS SHALL BE APPROVED BY ENGINEERING AND CITY ENGINEER.
b. FIRE SERVICE; THE FIRE SERVICE LINE/LATERAL FOR THE FIRE HYDRANTS SHALL BE PRIVATE, WITH BACK FLOW DEVICE PER CITY STANDARD AND LOCATED BEHIND BACK OF WALK ON PRIVATE PROPERTY.
c. FIRE SPRINKLER: FIRE SPRINKLER LINES FOR EACH UNIT CAN LATERAL OFF THE PRIVATE FIRE HYDRANT LINE WITH FINAL APPROVAL BY FIRE.
d. IRRIGATION: THE IRRIGATION SHALL BE A SEPARATE LATERAL OFF THE PUBLIC WATER MAIN WITH METER AND BACK FLOW DEVICE LOCATED AT THE BACK OF WALK ON PRIVATE PROPERTY.

E. STREETS

a. ALONG PROJECT FRONTAGE PROVIDE 2-INCH AC GRIND AND OVERLAY TO STREET CENTERLINE OR RAISED MEDIAN.
b. ADDITIONAL CURB, GUTTER AND SIDEWALK MAY NEED TO BE REMOVED AND REPLACED, WHICH SHALL BE DETERMINED FWITH THE PRECISE PLAN REVIEW.

F. SEPARATE ENGINEERING REVIEW: UPON APPROVAL OF THE SD AND SR APPLICATION, SUBMITTAL OF THE FANAL MAP AND IMPROVEMENT PLANS SHALL BE SUBMITTED DIRECTLY TO ENGINEERING FOR REVIEW AND APPROVAL.

a. REVIEW FEES: PRIOR TO SUBMITTAL OF MAP AND PLANS, PROVIDE TO ENGINEERING SEPARATE COST ESTIMATES OF TH PUBLIC AND PRIVATE IMPROVEMENTS, FROM WHICH REVIEW FEES SHALL BE CALCULATED.
b. ENGINEERING SUBMITTAL SETS: DUE TO PANDEMIC ONLY 3 SETS OF HARD COPIES ARE REQUIRED VS THE 7 SETS REQUIRED BY SUBMITTAL REQUIREMENTS. DIGITAL COPIES OF ALL SUBMITTAL REQUIREMENTS SHALL BE PROVIDED TO ENGINEERING BY USB DRIVE OR BY DIGITAL DOWNLOAD.

GENERAL

A. FINAL MAP: THE APPLICANT SHALL HAVE A FINAL MAP PREPARED BY A REGISTERED ENGINEER (LICENSED PRIOR TO 01/01/1982: REGISTRATION NUMBER 33,965 OR LOWER) OR LICENSED LAND SURVEYOR DELINEATING ALL PARCELS AND EASEMENTS CREATED. THERE SHALL BE CONCURRENCE IN WRITING BY PG & E, TELEPHONE, CABLE TV AND ANY OTHER AFFECTED AGENCIES TO ALL IMPROVEMENTS AND EASEMENTS WHICH ARE APPLICABLE TO THEM. THE NUMBER AND LOCATIONS OF MONUMENTS SHALL BE SET AS REQUIRED BY THE CITY ENGINEER. (MHMC 17.20.200 A; 17.20.290; 17.24.010)

B. PUBLIC AND PRIVATE IMPROVEMENTS: THE APPLICANT SHALL CAUSE THE CONSTRUCTION OF ALL PUBLIC AND PRIVATE IMPROVEMENTS IN ACCORDANCE WITH THE LATEST CITY STANDARD DRAWINGS AND SPECIFICATIONS. (MHMC 12.02.090 A; 17.32.010 A)

C. IMPROVEMENT DRAWINGS: THE APPLICANT SHALL SUBMIT AS PART OF THE IMPROVEMENT DRAWINGS FOR THE PROJECT, PROFILES OF ALL IMPROVEMENTS IN THE SUBDIVISION AND TYPICAL CROSS-SECTIONS OF ALL STREETS AND DETAILS OF CURBS, GUTTERS, AND SIDEWALKS, TO BE ACCOMPLISHED TO THE SATISFACTION OF THE CITY ENGINEER PRIOR TO SUBMITTAL OF FINAL MAP. (MHMC SEC 17.32.060B; 17.32.070; 17.32.080 A)

1. IMPROVEMENT PLANS ARE TO SHOW WATER LINES, SANITARY SEWER, STORM DRAIN SYSTEM, PAVEMENT WIDTHS,CURVE RADIUS, AND EXISTING UTILITIES.

D. ENCROACHMENT PERMITS: OBTAIN NECESSARY ENCROACHMENT PERMITS FROM THE CITY OF MORGAN HILL AND PROVIDE GUARANTEE COVERING OFF-SITE IMPROVEMENTS (MHMC 12.08.040A; 12.08.090)

E. SUBDIVISION IMPROVEMENT AGREEMENT: ENTER INTO A SUBDIVISION IMPROVEMENT AGREEMENT (SIA) WITH THE CITY OF MORGAN HILL TO COVER REQUIRED IMPROVEMENTS (MHMC 12.02.150; 17.32.010 B; 17.32.160)

F. IMPACT FEE INCREASE: THE CITY OF MORGAN HILL, PURSUANT TO CITY CODE CHAPTER 3.56 HAS ESTABLISHED IMPACT FEES TO FINANCE THE COST OF IMPROVEMENTS REQUIRED BY NEW DEVELOPMENT. CITY CODE CHAPTER 3.56.050 PROVIDES FOR AUTOMATIC ANNUAL (JULY 1ST) ADJUSTMENT OF THOSE FEES IN EXISTENCE UTILIZING THE ENGINEERING NEWS RECORD INDEX FOR THE PRECEDING TWELVE MONTHS. THE CITY MAINTAINS HISTORICAL RECORDS ON THE ENGINEERING NEWS RECORD INDEX. THESE RECORDS ARE AVAILABLE FOR INSPECTION DURING NORMAL BUSINESS HOURS. (MHMC 3.56.010; 3.56.030; 356.050)

G. CONSTRUCTION LOGISTICS PLAN: A CONSTRUCTION LOGISTICS PLAN SHALL BVE SUBMITTED WITH THE OFF-SITE IMPROVEMENT PLANS THAT ADDRESS ALL IMPACTS TO THE PUBLIC ROAD RIGH-OF-WAY, INCLUDING BUT NOT LIMITED TO: PEDESTRIAN CONTROL, TRAAFFIC CONTROL, DETOURS, TRUCK ROUTES, MATERIAL DELIVERIES, CONTRACTOR'S PARKING, ON-SITE STAGING AND STORAGE AREAS, CONCRETE POURS, FWORK HOURS, NOISE CONTROL, DUST CONTROL, AND STORM WATER POLLUTION PREVENTION. IT SHALL INCLUDE AN APPROVED TRUCK ROUTE MAP FOR CONSTRUCTION TRAFFIC TO AND FROM THE SITE.

STREET IMPROVEMENTS

A. PUBLIC AND PRIVATE STREETS: THE APPLICANT SHALL CAUSE THE DESIGN AND CONSTRUCTION OF ALL NEW PUBLIC AND PRIVATE STREETS SERVING THE PROJECT. THE DESIGN OF ALL NEW PUBLIC AND PRIVATE STREETS SHALL BE CONSISTENT WITH THE GENERAL PLAN LAND USE AND CIRCULATION ELEMENT AS WELL AS THE STREET STANDARD DETAILS AS CONTAINED WITHIN THE PUBLIC WORKS STANDARDS DETAILS. THE CONSTRUCTION OF THE STREETS SHALL BE UNDERTAKEN TO THE LINES AND GRADES AND IN A MANNER SATISFACTORY TO THE CITY ENGINEER. ALL STREET IMPROVEMENTS SHALL BE CONSTRUCTED TO THE SATISFACTION OF THE CITY ENGINEER. THE TIMING OF THE IMPROVEMENTS WILL BE DETERMINED BY THE CITY. (MHMC 12.02.010; 12.02.090; 17.32.060 B; CMH GERNERAL PLAN; CMH DEWSIGN STANDARDS AND STANDARD DETAILS FOR CONSTRUCTION)

B. INSTALLATION AND DEDICATION OF STREETS; THE PROJECT SHALL INSTALL AND DEDICATE STREET IMPROVEMENT INCLUDING, BUT NOT LIMITED TO, CURB AND GUTTER, SIDEWALK, COMPACTION, STREET PAVING, OILING, STORM DRAINAGE FACILITIES, SEWER AND WATER, FIRE PROTECTION, UNDERGROUNDING OF UTILITIES AND STREET LIGHTING IN CONFORMANCE WITH CITY OF MORGAN HILL REQUIREMENTS (MHMC 12.02.010; 12.02.50; 12.02.080; 12.02.100; 17.28.010; 17.32.060)

C. UNDERGROUND EXISTING UTILITIES: ALL EXISTING OVERHEAD UTILITIES ADJACENT TO ANY SITE BOUNDARY OR ALONG STREET FRONTAGE OF SITE SHALL BE PLACED UNDERGROUND IN ACCORDANCE WITH CITY STANDARDS AND AFFECTED UTILITY COMPANY GUIDELINES (MHMC 12.02.090 B; 17.32.020E.1)

SANITRY SEWER SYSTEM

A. DESIGN OF SEWER iMPROVEMENTS: THE APPLICANTSHALL CAUSE TO BE UNDERTAKEN THE DESIGN AND CONSTRUCTION OF SANITARY SEWER IMPROVEMENTS INCLUDING, BUT NOT LIMITED TO INSTALLATION OF SEWER LINE EXTENSION ON THE PROPOSED PUBLIC STREET(S) OR PRIVATE STREET(S)/DRIVE AISLE(S). THE SANITARY COLLECTION SYSTEM SHALL INCLUDE, BUT NOT BE LIMITED TO MANHOLES WITH MANHOLE FRAMES AND COVERS, CLEANOUTS, WYE-BRANCHES AND LATERALS, AND SEPARATE SEWER TAPS TO EACH LOT. THESE ARE TO BE INSTALLED BY THE DEVELOPER. (MHMC 13.20.355; 17.32.020 C; CMH SEWERSYSTEM MASTER PLAN; CMH DESIGN STANDARDS AND STANDARD DETAILS FOR CONSTRUCTION.

B. SEWER CONNECTIONS: ALL EXISTING AND FUTURE SEWER LINES SHALL BE TIED INTO THE CITY'S SYSTEM AND EXISTING SEPTIC SYSTEMS SHALL BE ABANDONED IN ACCORDANCE WITH CITY REQUIREMENTS (MHMC 13.24.060; 17.32.20 C)

STORM DRAIN SYSTEM

A. STORM DRAINAGE STUDY: A COMPLETE STORM DRAINAGE STUDY OF THE PROPOSED DEVELOPMENT MUST BE SUBMITTED SHOWING AMOUNT OF RUN-OFF, AND EXISTING AND PROPOSED DRAINAGE STRUCTURE CAPACITIES. THIS STUDY SHALL BE SUBJECT TO REVIEW AND APPROVAL BY THE CITY ENGINEER. ALL NEEDED IMPROVEMENTS WILL BE MADE BY THE APPLICANT. NO OVERLOADING OF THE EXISTING SYSTEM WILL BE PERMITTED. (MHMC 17.32.020 B; 17.32.090; CMH DESIGN STANDARDS AND STANDARD DETAILS FOR CONSTRUCTION.

B. STORM DRAINAGE DESIGN: THE APPLICANT SHALL CAUSE THE DESIGN AND CONSTRUCTION TO BE UNDERTAKEN FOR A STORM DRAINAGE COLLECTION SYSTEM SHOWN ON THE TENTATIVE MAP/DESIGN REVIEW PLANS. ALL STORM DRAIN IMPROVEMENTS SHALL BE CONSTRUCTED TO THE SATISFACTION OF THE CITY ENGINEER. (MHMC 17.32.020 A & B)

C. STORM DRAINAGE CAPACITY: COLLECTION SYSTEM SHALL BE DESIGNED TO BE CAPABLE OF HANDLING A 10-YEAR STORM WITHOUT LOCAL FLOODING. ON-SITE DETENTION FACILITIES SHALL BE DESIGNED TO A 25-YEAR STORM CAPACITY. STREETS SHALL BE DESIGNED TO CARRY 100-YEAR STORM. ITEMS OF CONSTRUCTION SHALL INCLUDE, BUT NOT BE LIMITED TO INSTALLATION OF STORM LINE EXTENSION ON PROPOSED PUBLIC STREET(S). SURFACE AND SUBSURFACE STORM DRAIN FACILITIES, MANHOLES WITH MANHOLE FRAMES AND COVERS, CATCH BASINS AND LATERALS. NOTE: THE PROJECT MAY BE REQUIRED TO RETAIN STORMWATER RUNOFF AS PART OF RESOLUTION R3-2013-0032 PRIOR TO RELEASING DISCHARGE RATES AT PRE-DEVELOPMENT FLOWS. (MHMC 17.32.020 B; 18.74.440; CMH DESIGN STANDARDS AND STANDARD DETAILS FOR CONSTRUCTION; CMH STORM DRAINAGE SYSTEM MASTER PLAN.

D. STORM DRAINAGE GENERAL REQUIREMENTS: PRIOR TO FINAL MAP APPROVAL OR ISSUANCE OF A GRADING PERMIT, THE APPLICANT SHALL COMPLETE THE FOLLOWING TO SATISFACTION OF THE CITY ENGINEER.

1. STORM DRAIN CALCULATIONS TO DETERMINE DETENTION/RETENTION POND SIZING AND OPERATIONS.
2. PLAN DESCRIBING HOW MATERIAL EXCAVATED DURING CONSTRUCTION WILL BE CONTROLLED TO PREVENT THIS MATERIAL FROM ENTERING THE STORM DRAIN SYSTEM.
3. WATER POLLUTIN CONTROL DRAWINGS (WPCD) FOR SEDIMKENT AND EROSION CONTROL. (CMH DESIGN STANDARDS AND STANDARD DETAILS FOR CONSTRUCTION)

E. BEST MANAGEMENT PRACTICES: BMP TREE PROTECTION SHALL BE PART OF THE SWPPP INSPECTIONS.

F. NPDES CONSTRUCTION ACTIVITY GENERAL PERMIT/SWPPP REQUIREMENTS: AS REQWUIRED BY THE STATE WATER RESOURCES CONTROL BOARD (SWRCB) ORDER NO. 2009-0009-DWQ, CONSTRUCTION ACTIVITY RESULTING IN A LAND DISTURBANCE OF ONE (1) ACRE OR MORE OF SOIL, OR WHOSE PROJECTS ARE PART OF A LARGER COMMON PLAN OF DEVELOPMENT THAT IN TOTAL DISTURBS MORE THAN ONE (1) ACRE, ARE REQUIRED TO OBTAIN COVERAGE UNDER THE NATIONAL POLLUTANT DISCHARGE ELIMINATION SYSTEM (NPDES) GENERAL PERMIT NO. CAS000002 FOR DISCHARGES OF STORM WATER ASSOCIATED WITH CONSTRUCTION ACTIVITY (GENERAL PERMIT). TO BE PERMITTED WITH THE SWRCB UNDER THE GENERAL PERMIT, OWNERS MUST FILE A COMPLETE NOTICE OF INTENT (NOI) ONLINE AT: http://smarts.waterboards.ca.gov/smarts/faces/SwWmartsLogin.jsp AND DEVELOP A STORM WATER POLLUTION PREVENTION PLAN (SWPPP) MANUAL IN ACCORDANCE WITH THE GENERAL PFERMIT. THE SWPPP MANUEAL SHALL FOLLOW THE CASQA SWPPP TEMPLATE/FORMAT AT http://www.casqa.org/store/products/tabid/154/p-167-construction-handbookportal-inital-subscription.aspx AND SHALL BE APPROVED BY PUBLIC WORKS ENGINEERING. A WASTE DISCHARGER IDENTIFICATION (WDID) NUMBER TO BE ISSUED TO THE CONSTRUCTION SITE AFTER THE SWRCB RECEIVES AND VERIFIES THE SUBMITTED ONLINE NOI INFORMATION. THE WDID NUMBER AND APPROVED SWPPP MANUAL SHALL BE PROVIDED TO PUBLIC WORKS AND THE BUILDING DEPARTMENT PRIOR TO ANY APPROVAL OF GRADING ACTIVITIES (SWRCB NPDES GENERAL PERMIT CA000002).

G. NPDES GENERAL PERMIT/SITE SWPPP INSPECTIONS AND COMPLIANCE:

1. ALL PROJECT ONSITE AND OFFSITE CONSTRUCTION ACTIVITY SHALL HAVE THE SITE INPECTED BY A QUALIFIED THIRD PARTY SWPPP INSPECTOR (QSD OR QSP OR RCE).
2. SWPPP INSPECTIONS SHALL OCCUR WEEKLY DURING THE RAINY SEASON (SEPTEMBER 15TH THRU MAY 1ST.
3. SWPPP INSPECTIONS SHALL OCCUR BI-WEEKLY DURING THE NON-RAINY SEASON.
4. 48 HOURS PRIOR T AND FOLLOWING A FORECASTED RAIN EVENT, SWPPP INSPECTIONS SHALL OCCUR IN ADDITION TO THOSE OF ITEMS 2 OR 3 ABOVE.
5. PER EACH OF THE INSPECTGION CONDITIONS 2, 3, OR 4 THE NPDES SWPPP INSPECTOR SHALL CERTIFY IN WRITING TO THE BUILDING AND PUBLIC WORKS DEPARTMENT IF THE SITE IS IN COMPLIANCE OR NON-COMPLIANCE WITH THE NPDES GENERAL PERMIT FOR STORMWATER, SITE SWPPP MANUAL, AND WATER POLLUTION CONTROL DRAWINGS (PER THE CMH-SWPPP INSPECTION CHECK LIST TO BE PROVIDED BY PUBLIC WORKS). QSD/QSP SWPPP INSPECTORS SHALL FORWARD ONSITE AND OFFSITE INFORMATION/ CERTIFICATION TO THE BUILDING (ON-SITE PRIVATE PROPERTY ISSUES) AND PUBLIC WORKS (PUBLIC RIGHT-OF-WAY ISSUES) INSPECTORS RESPECTIVELY.
6. PRIOR TO RAIN EVENTS, BMPs* NOT IN COMPLIANCE WILL NEED TO BE CORRECTED IMMEDIATELY.
7. ILLICIT DISCHARGES PER THE NPDES GENERAL PERMIT, NON-COMPLIANCE OF TRACKING CONTROL, AND INLET PRTECTGION WITHIN THE PUBLIC RIGHT OF WAY SHALL BE ADDRESSED IMMEDIATELY.
8. OTHER NON-COMPLIANCE ISSURES NEED TO BE ADDRESSED WITHIN A 24L-HOUR PERIOD.
9. NON-COMPLIANCE ISSUES WHICH HAVE BEEN CORRECTED SHALL BE VERIFIED BY NPDES SWPPP INSPECTOR BY A FOLLOW UP INSPECTION.

   *BMPs MAINTENANCE/INSPECTIONS SHALL INCLUDE TREE PROTECTION OF APPLICABLE.

WATER SYSTEM

A. DOMESTIC WATER SYSTEM: THE APPLICANT SHALL CAUSE THE DESIGN AND CONSTRUCTION TO BE UNDERTAKEN OF A DOMESTIC WATER SYSTEM TO THE SATISFACTION OF THE CITY ENGINEER. THE WATER SYSTEM IMPROVEMENTS SHALL BE CONSTRUCTED WITH PUBLIC EASEMENTS OR STREET RIGHTS-OF-WAY TO THE SATISFACTION OF THE CITY ENGINEER AND DEDICATED TO THE CITY. (MHMC 17.32.020 A & D; CMH DESIGN STANDARDS AND STANDARD DETAILS FOR CONSTRUCTION; CMH WATER SYSTEM MASTER PLAN)

B. WATER WELL ABANDONMENT: ABOANDONMENT OF ANY EXISTING WATER WELL SHALL BE IN COFORMANCE WITH SANTA CLARA VALLEY WATER DISTRICT (SCVWD) ORDINANCE 90-1. LOCATION AND DISPOSITION TO BE SHOWN ON THE PLAN. WELL(S) SHALL BE PROPERLY REGISTERED WITH THE SCVWD AND EITHER BE MAINTAINED OR ABANDONED IN ACCORDANCE FWITH SCVWD STANDARDS.

C. WATER LINE EXTENSION: INSTALL WATER LINE EXTENSION ON THE PROPOSED PUBLIC STREETS AND/OR PRIVATE STREETS. (MHMC 17.32.020 A & D; CMH WATER SYSTEM MASTER PLAN)

D. SEPARATE METERS: PROVIDE SEPARATE WATER SERVICES AND METERS FOR EACH LOT. THESE ARE TO BE INSTALLED BY THE DEVELOPER. (MHMC 17.32.020 D)

OTHER CONDITIONS

A. EASEMENT DEDICATIONS: THE OWNER SHALL DEDICATE ALL MECESSARY UTILITY EASEMENTS. (MHMC 12.02.080 D; 17.28.010 A)

B. MAPS: THE FINAL MAP ON ALL MAJOR SUBDIVISIONS (5 OR MORE LOTS OR SUBDIVISION FOR CONDOMINIUM PURPOSES) SHALL BE APPROVED BY THE CITY COUNCIL PRIOR TO ISSUANCE OF A GRADING PERMIT. FOR MINOR SUBDIVISIONS (4 LOTS OR LESS), THE FINAL MAP SHALL BE SIGNED BY THE CITY ENGINEER AND THE PLANNING COMMISSION SECRETARY PRIOIR TO ISSUANCE OF A GRADING PERMIT (MHMC 17.20.390; 17.24.210).

C. LANDSCAPING AND IRRIGATION SYSTEMS: LANDSCAPING AND IRRIGATION SYSTEMS SERVING COMMON AREAS THAT ARE REQUIRED TO BE INSTALLED IN THE PUBLIC RIGHT-OF-WAY ON THER PERIMETER OF THIS TRACT AREA SHALL BE CONTINUOUSLY MAINTAINED BY THE HOMEOWNER'S ASSOCIATION.

D. FINAL LANDSCAPE PLANS: FINAL LANDSCAPE PLANS SHALL BE SUBMITTED WITH AND INCLUDED AS PART OF THE IMPROVEMENT PLANS FOR THE SUBDIVISION (MHMC 17.08.090)

E. PRE-CONSTRUCTION MEETING: PRIOR TO THE APPROVAL OF ANY BUILDING PERMIT FOR GRADING ACTIVITY, THE DEVELOPER SHALL SCHEDULE A PRE-CONSTRUCTION MEETING WITH THE PUBLIC WORKS INSPECTION DIVISION WITH THE FOLLOWING PROJECT TEAM MEMBERS:

1. CIVIL ENGINEER OF RECORD
2. GEOTECHNICAL ENGINEER OF RECORD
3. THIRD PARTY QSD/QSP SWPPP INSPECTOR
4. GENERAL CONTRACTOR
5. SUB-CONTRACTORS

NPDES WATER QUALITY STORMWATER MANAGEMENT DEVELOPMENT STANDARDS

A. STATE WATER RESOURCES CONTROL BOARD POST CONSTRUCTIN REQUIREMENTS (PCRs): PROJECT SHALL COMPLY WITH THE CALIFORNIA REGIONAL WATER QUALITY CONTROL BOARD CENTRAL COAST REGION RESOLUTION NO. R3-2013-032 AS DOCUMENTED BY THE STORMWATER MANAGEMENT GUIDANCE MANUAL FOR LOW IMPACT DEVELOPMENT AND POST-CONSTRUCTION REQUIREMENTS (DEVELOPED FROM RESOLUTION NO. R-2013-0032 ATTACHMENT 1 AND 2 AT: http://www.waterboards.ca.gov/centralcoast/water_issues/programs/stormwater/docs/lid/lid_hydromod_charette_index.shtml. A COPY OF THE GUIDANCE MANUAL CAN BE OBTAINED THROUGH THE LAND DEVELOPMENT ENGINEERING WEBPAGE. PROJECT SHALL PROVIDE STORMWATER RUNOFF MANAGEMENT PLAN, STORMWATER CONTROL PLAN CHECKLIST AND APPLICABLE CALCULATIONS PER THE STORMWATER MANAGEMENT GUIDANCE MANUAL FOR LOW IMPACT DEVELOPMENT AND POST-CONSTRUCTION REQUIREMENTS. PROJECT SHALL MEET THE APPLICABLE REQUIREMENTS OF THE STORMWATER MANAGEMENT GUIDANCE MANUAL FOR LOW IMPACT DEVELOPMENT AND POST-CONSTRUCTION REQUIREMENTS:

1. PERFORMANCE REQUIREMENT 1: SITE DESIGN AND RUNOFF REDUCTION
2. PERFORMANCE REQUIREMENT 2: WATER QUALITY TREATMENT
3. PERFORMANCE REQUIREMENT 3: RUNOFF RETENTION
4. PERFORMANCE REQUIREMENT 4: PEAK MANAGEMENT

B. PEAK STORM WATER RUNOFF DISCAHARE RATES - POST-DEVELOPMENT PEAK STORM WATER RUNOFF DISCHARGE RATES SHALL NOT EXCEED THE ESTIMATED PRE-DEVELOPMENT RATE FOR DEVELOPMENTS WHERE THE INCREASED PEAK STORM WATER DISCHARGE RATE WILL RESULT IN INCREASED POTENTIAL FOR DOWNSTREAM EROSIAN. NOTE: THE PROJECT MAY BE REQUIRED TO RETAIN STORMWATER RUNOFF AS PART OF RESOLUTION R3-2013-0032 PRIOR TO RELEASING DISCHARGE RATES AT PRE-DEVELOPMENT FLOWS.

C. PROVIDE STORM DRAIN SYSTEM STENCILING AND SIGNAGE - STORM DRAIN STENCILS ARE HIGHTLY VISIBLE SOURCE CONTROLS THAT ARE TYPICALLY PACED DIRECTLY ADJACENT TO STORM DRAIN INLETS. THE STENCIL CONTAINS A BRIEF STATEMENT THAT PROHIBITS THE DUMPING OF IMPROPER MATERIALS INTO THE STORM WATER CONVEYANCE SYSTEM. GRAPHICAL ICONS, EITHER ILLUSTRATING ANTI-DUMPING SYMBOLSOR IMAGES OF RECEIVING WATER FAUNA, ARE EFFECTIVE SUPPLEMENTS TO THE ANTI-DUMPING MESSAGE. ALL STORM DRAIN INLETS AND CATCH BASINS WITHIN THE PROJECT AREA MUST BE STENCILED WITH PROHIBITIVE LANGUAGE (SUCH AS "NO DUMPING - DRAINS TO CREEK") AND/OR GRAPHICAL ICONS TO DICOURAGE ILLEGAL DUMPING. SIGNS AND PROHIBITIVE LANGUAGE AND/OR GRAPHICAL ICONS, WHICH PROHIBIT ILLEGAL DUMPING, MUST BE POSTED AT PUBLIC ACCESS POINTS ALONG CHANNELS AND CREEKS WITHIN THE PROJECT AREA. LEGIBILITY OF STENCILS AND SIGNS MUST BE MAINTAINED.

D. PROPERLY DESIGN TRASH ENCLOSURE AREAS - AL TRASH ENCLOSURE AREAS MUST MEET THE FOLLOWING STRUCTURAL OR TREATMENT CONTROL BMP REQUIREMENTS:

1. ROOF REQUIRED: TRASH ENCLOSURE SHALL HAVE AN ALL-WEATHER NONCOMBUSTIBLE SOLID ROOF TO PREVENT RAINWATER FROM MIXING WITH THE ENCLOSURE'S CONTENTS.
2. WALLS REQUIRED: TRASH ENCLOSURE SHALL HAVE STRUCTURAL WALLS TO PREVENT UNAUTHORIZED OFF-SITE TRANSPORT OF TRASH.
3. DOORS: TRASH ENCLOSURE SHALL HAVE DOORS(S) WHICH CAN BE SECURED WHEN CLOSED.
4. GRADES: THE PAD FOR THE ENCLOSURE SHALL BE DESIGNED TO NOT DRAIN OUTWARD, AND THE GRADE SURROUNDING THE ENCLOSURE SHALL BE DESIGNED TO NOT DRAIN INTO THE ENCLOSURE.
5. DRAIN INLET: WITHIN THE ENCLOSURE, AN AREA DRAIN WITH AN APPROVED (ZURN) VANDAL PROOF DRAIN SHALL BE INSTALLED AND SHALL BE PLUMBED TO THE SANITARY SEWER SYSTEM WITH GREASE TRAP. GREASE TRAP SHALL BE LOCATED WITHIN THE TRASH ENCLOSURE FOOTPRINT.

E. DESIGN STANDARDS FOR STRUCTURAL OR TREATMENT CONTROL BMPs - THE POST-CONSTRUCTION TREATMENT CONTROL BMPs SHALL INCORPORATE, AT A MINIMUM, EITHER A VOLUMEETRIC OR FLOW-BASED TREATMENT CONTROL DESIGN STANDARD, OR BOTH, AS IDENTIFIED BELOW TO MITIGATE (INFILTRATE, FILTER OR TREAT) STORMWATER RUNOFF:

1. VOLUMETRIC TREATMENT CONTROLBMP
   a. THE 85TH PERCENTILE 24-HOUR RUNOFF EVENT DETERMINED AS THE MAXIMIZED CAPTURE STORM WATER VOLUMN FOR THE AREA, FROM THE FORMULA RECOMMENDED IN URBAN RUNOFF QUALITY MANAGEMENT, WEF MANUAL OF PRACTIVE NO. 23/ASCE MANUAL OF PRACTICE NO. 87, (1998); OR
   b. THE VOLUME OF ANNUAL RUNOFF BASED ON UNIT BASIN STORAGE WATER QUALITY VOLUME, TO ACHIEVE 80 PERCENT OR MORE VOLUMN TREATMENT BY THE METHOD RECOMMENDED IN CALIFORNIA STORMWATER BEST MANAGEMENT PRACTICES HANDBOOK-INDUSTRIAL/COMMERCIAL, (2003); OR
   c. THE VOLUMN OF RUNOFF PRODUCED FROM A HISTORICAL-RECORD BASED REFEENCE 24-HOUR RAINFALL CRITERION FOR "TREATMENT" THAT ACHIEVES APPROXIMATELY THE SAME REDUCTION IN POLLUTANT LOADS ACHIEVED BY THE 85TH PERCENTILE 24-HOUR RUNOFF EVENT.
2. FLOW BASED TREATMENT CONTROL BMP
   a. THE FLOW OF RUNOFF PRODUCED FROM A RAIN EVENT EQUAL TO AT LEAST TWO TIMES THE 85TH PERCENTILE HOURLY RAINFALL INTENSITY FOR THE AREA; OR
   b. THE FLOW OF RUNOFF PRODUCED FROM A RAIN EVENT THAT WILL RESULT IN TREATMENT OF THE SAME PORTION OF RUNOFF AS TREATED USING VOLUMETRIC STANDARDS ABOVE.

F. STORMWATER RUNOFF MANAGEMENT PLAN (SWRMP) REQUIRED - THE STORMWATER RUNOFF MANAGEMENT PLAN SHALL INCLUDE SUFFICIENT INFORMATION TO EVALUATE THE ENVIRONMENTAL CHARACTERISTICS OF AFFECTED AREAS, THE POTENTIAL IMPACTS OF THE PROPOSED DEVELOPMENT ON WATER RESOURCES, AND THE EFFECTIVENESS AND ACCEPTABLILITY OF MEASURES (POST CONSTRUCTION BMPs PROPOSED FOR MANAGING STORMWATER RUNOFF.

1. THE STORMWATER RUNOFF MANAGEMENT PLAN SHALL BE PREPARED UNDER THE DIRECTION OF A PROFESSIONAL CIVIL ENGINEER REGISTERED IN THE STATE OF CALIFORNIA. THE RESPONSIBLE PROFESSIONAL CIVIL ENGINEER SHALL STAMP AND SIGN THE APPROVED STORMWATER RUNOFF MANAGEMENT PLAN.
2. THE CITY ENGINEER OR DESIGNEE MAY REQUIRE A DEVELOPER TO PROVIDE A SIGNED CERTIFICATION FROM THE CIVIL ENGINEER RESPONSIBLE FOR PREPARING THE STORMWATER RUNOFF MANAGEMENT PLAN THAT ALL STORMWATER BEST MANAGEMENT PRACTICES HAVE BEEN DESIGNED TO MEET THE REWQUIREMENTS OF THIS CHAPTER.
3. EACH CERTIFYING CIVIL ENGINEER SHALL ESTABLISH TO THE CITY'S SATISFACTION THAT SUCH PERSON HAS BEEN TRAINED ON THE DESIGN OF STORMWATER QUALITY BEST MANAGEMENT PRACTICES NOT MORE THAN THREE YEARS PRIOR TO THE CERTIFICATION SIGNATURE DATE.
4. QUALIFYING TRAINING SHALL BE CONDUCTED BY AN ORGANIZTION WITH STORMWATER QUALITY MANAGEMENT EXPERTISE, SUCH AS A UNIVERSITY, THE BAY AREA STORMWATER MANAGEMENT AGENCIES ASSOCIATION, THE AMERICAN SOCIETY OF CIVIL ENGINEERS, THE AMERICAN PUBLIC WORKS ASSOCIATION, OR THE CALIFORNIA WATER ENVIRONMENT ASSOCIATION.

G. STORMWATER BMP OPERATION, MAINTENANCE, AND REPLACEMENT RESPONSIBILITY

1. ALL ON-SITE STORMWATER MANAGEMENT FACILITIES SHALL BE OPERATED AND MAINTAINED IN GOOD CONDITION AND PROMPTLY REPAIRED/REPLACED BY THE PROPERTY OWNER(S), AN OWNERS' OR HOMEOWNERS' ASSOCIATION OR OTHER LEGAL ENTITY APPROVED BY THE CITY.
2. AMY REPAIRS OR RESTORATION/REPLACEMENT AND MAINTENANCE SHALL BE IN ACCORDANCE WITH CITY-APPROVED PLANS.
3. THE PROPERTY OWNER(S) SHALL DEVELOP A MAINTENANCE SCHEDULE FOR THE LIFE OF ANY STORMWATER MANAGEMENT FACILITY AND SHALL DESCRIBE THE MAINTENANCE TO BE COMPLETED, THE TIME PERIOD FOR COMPLFETION, AND WHO SHALL PERFORM THE MAINTENANCE SCHEDULE SHALL BE INCLUDED WITH THE APPROVED STORMWATER RUNOFF MANAGEMENT PLAN.

H. STORMWATER BMP OPERATION AND MAINTENANCE AGREEMENT (SWBOMA) REQUIRED - IMPROPER MAINTENANCE IS ONE OF THE MOST COMMON SREASONS WHY WATER QUALITY CONTROLS WILL NOT FUNCTION AS DESIGNED OR WHICH MAY CAUSE THE SYSTEM TO FAIL ENTIRELY. IT IS IMPORTANT TO CONSIDER WHO WILL BE RESPONSIBLE FOR MAINTENANCE OF A PERMANENT BMP, AND WHAT EQUIPMENT IS REQUIRED TO PERFORM THE MAINTENANCE PROPERLY.

1. PRIOR TO THE ISSUANCE OF ANY BUILDING PERMIT REQUIRING STORMWATER MANAGEMENT BMPs, THE OWNER(S) OF THE SITE SHALL ENTER INTO A FORMAL WRITTEN STORMWATER BMP OPERATION AND MAINTENANCE AGREEMENT WITH THE CITY. THE CITY SHALL RECORD THIS AGREEMENT, AGAINST THE PROPERTY OR PROPERTIES INVOLVED, WITH THE COUNTY OF SANTA CLARA AND IT SHALL BE BINDING ON ALL SUBSEQUENT OWNERS OF LAND SERVED BY THE STORM WATER MANAGEMENT TREATMENT BMPs (CITY STANDARD STORMWATER BMP OPERATION AND MAINTENANCE AGREEMENT TO BE PROVIDED BY PUBLIC WORKS ENGINEERING).
2. THE STORMWATER BMP OPERATGION AND MAINTENANCE AGREEMENT SHALL REQUIRE THAT THE BMPs NOT BE MODIFIED, AND BMP MAINTENANCE ACTIVITIES NO ALTER THE DESIGNED FUNCTION OF THE FACILITY FROM ITS ORIGINAL DESIGN UNLESS APPROVED BY THE CITY PRIOR TO THE COMMENCEMENT OF THE PROPOSED MODIFICATION OR MAINTENANCE ACTIVITY.
3. THE STORMWATER BMP OPERATION AND MAINTENANCE AGREEMENT SHALL PROVIDE THAT IN THE EVENT THAT MAINTENANCE OR REPAIR IS NEGLECTED, OR THE STORMWATER MANAGEMENT FACILITY BECOMES A DANGER TO PUBLIC HEALTH OR SAFETY, THE CITY SHALL HAVE THE AUTHORITY TO PERFORM MAINTENANCE AND/OR REPAIR WORK AND TO RECOVER THE COSTS FROM THE OWNER.

I. STORMWATER BMP INSPECTION RESPONSIBLITY

1. THE PROPERTY OWNER(S) SHALL BE RESPONSIBLE FOR HAVING ALL STORMWATER MANAGEMENT FACILITIES INSPECTED FOR CONDITIN AND FUNCTION BY A REGISTER CIVIL ENGINEER (RCE).
2. UNLESS OTHERWISE REQUIRED BY THE CHIEF ENGINEER OR DESIGNEE, STORMWATER FACILITY INSPECTIONS SHALL BE DONE AT LEAST TWICE A YEAR (APRIL 15TH AND SEPTEMBER 15TH) BY THE RCE. WRITTEN RECORDS SHALL BE KEPT OF ALL INSPECTIONS AND SHALL INCLUDE, AT MINIMUM, THE FOLLOWING INFORMATION:
   a. SITE ADDRESS
   b. DATE AND TIME OF INSPECTION;
   c. NAME OF THE PERSON CONDUCTING THE INSPECTION;
   d. LIST OF STORMWATER FACILITIES INSPECTED;
   e. CONDITION OF EACH STORMWATER FACILITY INSPECTED;
   f. DESCRIPTION OF ANY NEEDED MAINTENANCE OR REPAIRS; AND
   g. AS APPLICABLE, THE NEED FOR SITE RE-INSPECTION.
3. UPON COMPLETION OF EACH INSPECTION, AN INSPECTION REPORT SHALL BE SUBMITTED TO PUBLIC WORKS ENGINEERING.

J. RECORDS OF MAINTENANCE AND INSPECTION ACTIVITIES - ON OR BEFORE APRIL 15TH AND SEPTEMBER 15TH OF EACH YEARF, THE PARTY RESPONSIBLE FOR THE OPERATION AND MAINTENANCE OF ON-SITE STORMFWATER MANAGEMENT FACILITIES UNDER THE BMP OPERATION AND MAINTENANCE AGREEMENT SHALL PROVIDE THE CHIEF ENGINEER OR DESIGNEE WITH RECORDS OF ALL INSPECTIONS MAINTENANCE AND REPAIRS.

K. ANNUAL CERTIFICATION OF SWRMP - ON OR BEFORE SEPTEMBER 30TH OF EACH YEAR A REGISTERED CIVIL ENGINEER (RCE) SHALL PROVIDE WRITTEN CERTIFICATION THAT THE DEVELOPMENTS STORMWATER QUALITY DESIGN STANDARDS ARE PROPERLY MAINTAINED AND FUNCTIONING AS REQUIRED BY THE SWRMP.

BUILDING DIVISION

A. CALIFORNIA CODE OF REGULATIONS: PROJECT SHALL BE DESIGNED TO COMPLY WITH THE CURRENT CALIFORNIA CODES OF REGULATIONS AS AMENDED BY THE MORGAN HILL MUNICIPAL CODE TITLE 15.

B. COMPLIANCE WITH MORGAN HILL MUNICIPAL CODE: PROJECT SHALL COMPLY WITH THE MORGAN HILL MUNICIPAL CODE (MHMC) INCLUDING BUT NOT LIMITED TO:

1. MHMC 15.65 SUSTAINABLE BUILDING REGULATIONS.
2. MHMC 18.72.040 C. ELECTRIC VEHICLE CHARGING.
   WHEN REQUIRED, ELECTRIC VEHICLE CHARGING STATIONS SHALL BE PROVIDED:
   - FOR NEW STRUCTURES OR USES REQUIRED TO PROVIDE AT LEAST TWENTY-FIVE PARKING SPACES, AND
   - ADDITIONS OR REMODELS THAT INCREASE AN EXISTING PARKING LOT OF FIFTY OR MORE SPACES BY TEN PERCENT OR MORE.

   NUMBER OF CHRGING STATIONS. THE NUMBER OF REQUIRED CHARGING STATIONS SHALL BE AS FOLLOWS:
   - TWENTY-FIVE TO FORTY-NINE PARKING SPACES: ONE CHARGING STATION.
   - FIFTY TO ONE HUNDRED PARKING SPACES: TWO CHARGING STATIONS, PLUS ONE FOR EACH ADDITIONAL FIFTY PARKING SPACES.
3. MHMC 15.40 BUILDING SECURITY
4. MHMC 15.38 WAGE THEFT PREVENTIONS
5. MHMC 18.148 WATER CONSERVATION
6. MHMC 15.63 PROHIBITION OF NATURAL GAS INFRASTRUCTURE IN NEW BUILDINGS (APPLIES TO ALL BUILDING PERMIT APPLICATIONS RECEIVED ON OR AFTER MARCH 1, 2020)

MHMC 15.63.040 PROHIBITED NATURAL GAS INFRASTRUCTURE IN NEWLY CONSTRUCTED BUILDINGS
- NATURAL GAS INFRASTRUCTURE SHALL BE PROHIBITED IN NEWLY CONSTRUCTED BUILDINGS.
  - EXCEPTION: NATURAL GAS INFRASTRUCTURE MAY BE PERMITTED IN NEWLY CONSTRUCTED BUILDING IF THE APPLICANT ESTABLISHES THAT IT IS NOT PHYSICALLY FEASIBLE TO CONSTRUCT THE BUILDING WITHOUT NATURAL GAS INFRASTRUCTURE. FOR PURPOSES OF THIS EXCEPTION, "PHYSICALLY FEASIBLE" TO CONSTRUCT THE BUILDING MEANS EITHER AN ALL-ELECTRIC PRESCRIPTIVE COMPLIANCE APPROACH IS AVAILABLE FOR THE BUILDING UNDER THE ENERGY CODE, OR THE BUILDING IS ABLE TO ACHIEVE THE PERFORMANCE COMPLIANCE STANDARDS UNDER THE ENERGY CODE USING COMMERCIALLY AVAILABLE TECHNOLOGY AND AN APPROVED CALCULATION METHOD.
- TO THE EXTENT THAT NATURAL GAS INFRASTRUCTURE IS PERMITTED, IT SHALL BE PERMITTED TO EXTEND TO ANY SYSTEM DEVICE, OR APPLIANCE WITHIN A BUILDING FOR WHICH AN EQUIVALENT ALL-ELECTRIC SYSTEM OR DESIGN IS NOT AVAILABLE.
- NEWLY CONSTGRUCTED BUILDINGS SHALL NONETHELESS BE REQUIRED AT A MINIMUM TO HAVE SUFFICIENT ELECTRIC CAPACITY, WIRING AND CONDUIT TO FACILITATE FUTURE FULL BUILDING ELECTRIFICATION.
- THE REQUIREMENTS OF THIS SECTION SHALL BE DEEMED OBJECTIVE PLANNING STANDARDS UNDER GOVERNMENT CODE SECTION 65913.4 AND OBJECTIVE DEVELOLPMENT STANDARDS UNDER GOVERNMENT CODE SECTION 65589.5.

FIRE DIVISION

A. PRELIMINARY REVIEW ONLY: THE REQUIREMENTS AND CONDITIONS STATED IN THIS REVIEW ARE PRELIMINARY AND ARE INTENDED TO BE USED FOR THE PURPOSES OF PROJECT PLANNING. AN OFFICIAL FIRE DEPARTMENT REVIEW OF THE PROJECT WILL BE CONDUCTED UPON RECEIPT OF A COMPLETE PLAN SUBMITTAL APPLICATION THAT CLEARLY SHOWS ALL INTENDED GRADING, DEMOLITION, CONSTRUCTION OR BUILDING MODIFICATIONS.

B. PROPOSAL LIMITED TO: REVIEW OF THIS DEVELOPMENT PROPOSAL IS LIMITED TO ACCEPTABILITY OF SITE ACCESS AS THEY PRETAIN TO FIRE DEPARTMENT OPERATIONS AND SHALL NOT BE CONSTRUED AS A SUBSTITUTE FOR FORMAL PLAN REVIEW TO DETERMINE COMPLIANCE WITH ADOPTED MODEL CODES. PRIOR TO PERFORMING ANY WORK, THE APPLICANT SHALL MAKE APPLICATION TO, AND RECEIVE FROM, THE BUILDING DEPARTMENT ALL APPLICABLE CONSTRUCTION PERMITS.

C. FIRE APPARATUS (ENGINE) ACCESS ROADS REQUIRED: PRIOR TO THE COMMENCEMENT OF COMBUSTIBLE CONSTRUCTION, AN ACCESS ROADWAY WITH A PAVED ALL-WEATHER SURFACE AND A MINIMUM UNOBSTRUCTED WIDTH OF 20 FEET, VERTICAL CLEARANCE OF 13 FEET, 6 INCHES SHALL BE PROVIDED, WITH MINIMUM CIRCULATING TURNING RADIUS OF 36 FEET OUTSIDE AND 23 FEET INSIDE, AND A MAXIMUM SLOPE OF 15%, UNLESS OTHERWISE APPROVED IN WRITING BY THE FIRE MARSHAL. INSTALLATIONS SHALL CONFORM TO THE CITY OF MORGAN HILL STANDARD DETAILS AND SPECIFICATIONS 11-B (CFC SECTION 503 AS AMENDED BY MHMC 15.44.140)

D. FIRE HYDRANT LOCATION IDENTIFIER: PRIOR TO PROJECT FINAL INSPECTION, THE GENERAL CONTRACTOR SHALL ENSURE THAT AN APPROVED ("BLUE DOT") FIRE HYDRANT LOCATION IDENTIFIER HAS BEEN PLACED IN THE ROADWAY, AS DIRECTED BY THE FIRE DEPARTMENT

E. TIMING OF REQUIRED ROADWAY INSTALLATIONS: PRIOR TO THE COMMENCEMENT OF COMBUSTIBLE CONSTRUCTION, THE REQUIRED ROADWAY INSTALLATRIONS, UP THROUGH FIRST LIFT OF ASPHALT, SHALL BE IN PLACE, INSPECTED, AND ACCEPTED BY THE CITY OF MORGAN HILL UNLESS OTHERWISE APPROVED IN WRITING BY THE FIRE MARSHAL. BULK COMBUSTIBLE CONSTRUCTION MATERIALS SHALL NOT BE DELIVERED TO THE CONSTRUCTION SITE UNTIL INSTALLATIONS ARE COMPLETED AS STATED ABOVE. DURING CONSTRUCTION, EMERGENCY ACCESS ROADS SHALL BE MAINTAINED CLEAR AND UNIMPEDED. ISSUANCE OF BUILDING PERMITS MAY BE WITHHELD UNTIL INSTALLATIONS ARE COMPLETED. (CFC CHAPTER 14 AS AMENDED BY MHMC 15.44.180)

F. TIMING OF REQUIRED WATER SUPPLY INSTALLATIONS: PRIOR TO THE COMMENCEMENT OF COMBUSTIBLE CONSTRUCTION, THE REQUIRED FIRE HYDRANT AND WATER SUPPLY INSTALLATIONS SHALL BE IN PLACE, INSPECTED, TESTED, AND ACCEPTED BY THE FIRE DEPARTMENT AND THE CITY OF MORGAN HILL, UNLESS OTHERWISE APPROVED IN WRITING BY FIRE MARSHAL. BUILD CONSTRUCTION MATERIALS MAY NOT BE DELIVERED TO THE CONSTRUCTION SITE UNTIL INSTALLATIONS ARE COMPLETED AS STATED ABOVE. CLCEARANCE FOR BUILDING PERMITS MAY BE HELD UNTIL INSTALLATIONS ARE COMPLETED. (CFC CHAPTER 14 AS AMENDED BY MHMC 15.44.180)

G. FIRE LANE MARKING REQUIRED: PROVIDE MARKING FOR ALL ROADWAYS WITHIN THE PROJECT. MARKINGS SHALL BE PER FIRE DEPARTMENT SPECIFICATIONS. INSTALLATIONS SHALL ALSO CONFORM TO LOCAL GOVERNMENT STANDARDS AND THE CITY OF MORGAN HILL STANDARD DETAILS AND SPECIFICATIONS 11-F. (CFC SECTION 503)

H. AUTOMATIC FIRE SPRINKLER SYSTEM REQUIRED: BUILDINGS REQUIRING AUTOMATIC FIRE SPRINKLER SYSTEM SHALL BE EQUIPPED THROUGHOUT WITH AN APPROVED AUTOMATIC FIRE SPRINKLER SYSTEM. THE FIRE SPRINKLER SYSTEM SHALL BE HYDRAULICALLY DESIGNED PER NATIONAL FIRE PROTECTION ASSOCIATION (NFPA) STANDARD #13. (CFC CHAPTER 9 AS AMENDED BY MHMC 15.44.170)

I. PRIVATE ON-SITE FIRE SERVICE MAINS AND HYDRANTS: INSTALLATIONS SHALL CONFORM TO NATIONAL FIRE PROTECTION ASSOCIATION STANDARD #24, AND THE CITY OF MORGAN HILL STANDARD DETAILS AND SPECIFICATIONS. PROVIDE PLAN SUBMITTAL TO THE CITY OF MORGAN HILL FOR REVIEW AND APPROVAL PRIOR TO INSTALLATION.

J. AERIAL FIRE APPARATUS ACCESS ROADS

1. WHERE REQUIRED: BUILDINGS OR PORTIONS OF BUILDINGS OR FACILITIES EXCEEDING 30 FEET (9144mm) IN HEIGHT ABOVE THE LOWEST LEVEL OF FIRE DEPARTMENT VEHICLE ACCESS SHALL BE PROVIDED WITH APPROVED FIRE APPARATUS ACCESS ROADS CAPABLE OF ACCOMMODATING FIRE DEPARTMENT AERIAL APPARATUS. OVERHEAD UTILITY AND POWER LINES SHALL NOT BE LOCATED WITHIN THE AERIAL FIRE APPARATUS ACCESS ROADWAY.
2. WIDTH: FIRE APPARATUS ACCCESS ROADS SHALL HAVE A MINIMUM UNOBSTRUCTED WIDTH OF 26 FEET (7925mm) IN THE IMMEDIATE VICINITY OF ANY BUILDING OR PROTION OF BUILDING MORE THAN 30 FEET (9144mm) IN HEIGHT.
3. PROXIMITY TO BUILDING: AT LEAST ONE OF THE REQUIRED ACCESS ROUTES MEETING THIS CONDITION SHALL BE LOCATED WITHIN A MINIMUM OF 15 FEET (4572mm) AND A MAXIMUM OF 30 FEET (9144mm) FROM THE BUILDING AND SHALL BE POSITIONED PARALLEL TO ONE ENTIRE SIDE OF THE BUILDING, AS APPROVED BY THE FIRE CODE OFFICIAL.

K. PARKING ALONG ROADWAYS: THE REQUIRED WIDTH OF FIRE ACCESS ROADWAYS SHALL NOT BE OBSTRUCTED IN ANY MANNER. PARKING SHALL NOT BE ALLOWED ALONG ROADWAYS LESS THAN 28 FEET IN WIDTH. PARKING WILL BE ALLOWED ALONG ONE SIDE OF THE STREET FOR ROADWAYS 28-35 FEET IN WIDTH. FOR ROADWAYS EQUAL TO OR GREATER THAN 36 FEET, PARKING WILL BE ALLOWED ON BOTH SIDES OF THE ROADWAY. ROADWAY WIDTHS SHALL BE MEASURED FACE TO FACE OF CURB. PARKING SPACES ARE BASED ON AN 8-FOOT-WIDE SPACE. (CFC SECTION 503)

THESE DRAWINGS ARE THE PROPERTY OF OSITO HOLDINGS, LLC AND ARE INTENDED FOR USE SOLELY ON THE PROJECT TITLED HEREON. THESE DRAWINGS AS PROTECTED UNDER COPYRIGHT LAWS ARE NOT TO BE REPRODUCED IN WHOLE OR PART IN ANY MANNER WITHOUT THE EXPRESSED WRITTEN CONSENT OF THE DESIGNER. USE OF THESE DRAWINGS IS LIMITED TO THE SITE INTENDED AND THEIR USE AT ANY OTHER SITE, OR ON OTHER PROJECTS IS PROHIBITED EXCEPT BY PRIOR WRITTEN CONSENT OF THE DESIGNER. ALL REPRODUCTINS OF THESE DRAWINGS, IN WHOLE OR PART, REMAIN UNDER THE OWNERSHIP OF THE DESIGNER AND SHALL BE RETURNED UPON COMPLETION OF THE PROJECT OR UPON REQUEST OF THE DESIGNER.

COPYRIGHT (C) 2020

OWNER / DEVELOPER:

OSITO HOLDINGS, LLC
P.O. BOX 2827
MESA, AZ 85214
(480) 646 6323

PROJECT:

TENNANT SQUARE
215 TENNANT AVENUE
MORGAN HILL, CA.
COUNTY OF
SANTA CLARA

DRAWING:

CONDITIONS OF APPROVAL

LICENSED ARCHITECT
ZUISHUANG CHEN
NO. C-28156
REN. 5/31/25
STATE OF CALIFORNIA

REVISIONS:
1 02.20.2023 PLAN CHECK RESPONSE
2 02.09.2024 PLAN CHECK RESPONSE

DATE: JUNE 03, 2024
SCALE: AS NOTED
DRAWN BY: G.E.MOORE
PROJ. MGR. G.E.MOORE
PROJECT FILE: 0.20-TENNANT
DRAWING: COA.2

APPROVAL CERTIFICATE NO. 21-003-CONDITIONS OF APPROVAL

FIRE DIVISION (CONTINUED)

L. REQUIREMENTS FOR SECONDARY ACCESS ROADS (SHALL BE COMPLETED PRIOR TO EXCEEDING 110 UNITS)

1. SEPERATION OF ACCESS ROADS. WHERE TWO ACCESS ROADS ARE REQUIRED, THEY SHALL BE PLACED A DISTANCE APART EQUAL TO NOT LESS THAN ONE HALF OF THE LENGTH OF THE MAXIMUM OVERALL DIAGONAL DIMENSION OF THE PROPERTY OR AREA TO BE SERVED, MEASURED IN A STRAIGHT LINE BETWEEN ACCESSES (FROM CENTERLINE TO CENTERLINE).
2. CONNECTION TO OTHER ROADS: WHERE A SECONDARY ACCESS ROADWAY CONNECTS TO A PUBLIC OR PRIVATE STREET THERE SHALL BE EITHER; NO CURB, A ROLLED CURB OR A DRIVEWAY CUT AS APPROVED BY THE FIRE CODE OFFICIAL.
3. EASEMENTS: ONLY LANDS OWNED OR IN CONTROL OF THE PROPERTY OWNER, HELD IN COMMON WITH ADJACENT PROPERTIES OR PUBLICLY OWNED MAY BE USED FOR SECONDARY ACCESS. SECONDARY ACCESS ROADWAYS SHALL NOT BE LOCATED IN EASEMENTS THROUGH PRIVATE PROPERTY UNLESS SPECIFICALLY APPROVED FY THE FIRE CODE OFFICIAL. WHEN EASEMENTS ARE REQUIRED FOR SECONDARY ACCESS ROADWAYS, THEY SHALL BE RECORDED AS EMERGENCY VEHICLE INGRESS EGRESS EASEMENTS (E.V.I.E.E) GRANTED TO THE FIRE DEPARTMENT.
4. MARKING AND IDENTIFICATION: WHEN NECESSARY, SIGNS OR OTHER APPROVED NOTICES SHALL BE POSTED AT SECONDARY ACCESS ROADWAYS TO PREVENT OBSTRUCTION BY PARKED VEHICLES. SUCH SIGNS OR NOTICES SHALL BE IN ACCORDANCE WITH FIRE PREVENTION DIVISION STANDARDS.
5. MAINTENANCE: SECONDARY ACCESS ROADWAYS SHALL BE MAINTAINED AT ALL TIMES BY THE PROPERTY OWNER. THE ROADWAY SURFACE GATES/LOCKS AND VERTICAL AND HORIZONTAL CLEARANCES SHALL BE MAINTAINED IN SERVICEABLE CONDITION. MAINTENANCE OF SECONDARY ACCESS ROADWAYS ON COMMONLY HELD LANDS SHALL BE CLEARLY STATED IN COVENANT, CONDITIONS, AND RESTRICTIONS (CC&R) OR LANDSCAPE MAINTENANCE AGREEMENTS OF THE DEVELOPMENT PROJECT. THE CC&RS SHALL MANDATE THAT THE OWNERS ASSOCIATION SHALL RETAIN PROFESSIONAL MANAGEMENT TO OVERSEE MAINTENANCE RESPONSIBILITIES.

HOUSING DIVISION

A. INCLUSIONARY HOUSING AGREEMENT: THE DEVELOPER SHALL EXECUTE AND RECORD AN INCLUSINARY AFFORDABLE HOUSING AGREEMENT WITH THE CITY PRIOR TO ISSUANCE OF A BUILDING PERMIT. (MHMC 14.04.050)

B. BMR STANDARDS: THE BELOW MARKET RATE (BMR) UNITS SHALL COMPLY WITH THE BMR STANDARDS.

BMR STANDARDS:

1. LOCATION. BMR UNITS SHALL BE DISTRIBUTED EVENLY THROUGHOUT THE PROJECT.
2. LOT SIZE. LOT SIZE SHALL BE AT LEAST THE SAME SIZE AS THE SMALLEST LOT OF A MARKET RATE UNIT WITHIN THE PROJECT.
3. BEDROOM COUNT. AVERAGE BEDROOM COUNT SHALL BE THE SAME AS THE AVERAGE BEDROOM COUNT IN THE MARKET RATE UNIT WITHIN THE PROJECT;
4. EXTERIOR. EXTERIOR TRIM ENTRY DOOR HARDWARE, AND FINISH TO THE SAME STANDARD AS THE MARKET RATE.
5. MIIMUM STANDARDS FOR EQUIPMENT, FIXTURES, APPLIANCES AND FINISHES HAVE BEEN ESTABLISHED FOR THE BMR UNITS. ALL ITEMS INSTALLED BY THE DEVELOPER SHALL BE OF GOOD QUALITY AND IN NEW CONDITION. GOOD QUALITY SHALL BE DEEMED AS ENTRY LEVEL BUT GENERALLY NOT THE LOWEST LEVEL OF PRODUCT OFFERED FOR THAT APPLICATION. ALL PRODUCTS SHALL OFFER DURABILITY, RELIABILITY AND MAINTAIN A QUALITY APPEARANCE AND FUNCTION THAT IS STANDARD TO MOST OTHER MEDIAN PRICED HOMES IN THE AREA. THE BELOW LISTED ITEMS MUST BE INSTALLED AS A BASIC FEATURE OF EACH BMR HOME.
6. MINIMUM INTERIOR STANDARD FINISHES WILL BE AS FOLLOWS:
   a. ALL CLOSETS SHALL HAVE DOORS.
   b. INTERIOR DOORS TO BE RAISED PANEL TYPE OR SAME AS MARKET RATE.
   c. DOOR HARDWARE TO BE BRASS FINISH OR EQUIVALENT.
   d. APPLIANCES SHALL BE MAJOR B RAND NAME.
   e. MICROWAVE WITH AN EXHAUST VENT SHALL BE INSTALLED OVER THE RANGE.
   f. KITCHEN COUNTERS SHALL BE WHITE CERAMIC TILE.
   g. KITCHEN CABINETS SHALL BE STAINED WOOD WITH WHITE MELAMINE INTERIORS.
   h. UNITS WILL BE ROUGHED IN FOR AC INCLUDING ELECTRICAL AND LINE SET.
   i. BASIC ALARM SYSTEM TO SECURE ALL ACCESSIBLE OPENINGS TO THE HOME.
   j. CARPET IN BEDROOMS, HALLWAYS, FAMILY ROOMS.
   k. LINOLEUM OR TILE ENTRY, BATHROOM AND KITCHENS.
   l. LAMINATE FLOORING MAY SUBSTITUTE FOR CARPET OR LINOLEUM.
   m. ELECTRIC GARAGE DOOR OPENER.
7. TIMING OF CONSTRUCTION. BMR UNITS SHALL BE CONSTGRUCTED IN PROPORTION TO THE BMR OWNERSHIP HOUSING REQUIREMENT APPLICABLE TO THE PROJECT. FOR EXAMPLE, FOR A PROJECT WITH 389 UNITS AND 20% BMR RENTAL HOUSING COMMITMENT, AT LEAST ONE BMR UNIT SHALL BE CONSTRUCTED BEFORE OR CONCURRENTLY WITH EVERY 5TH MARKET RATE UNIT CONSTRUCTED. THE LAST MARKET RATE UNIT TO BE COMPLETED IN THE PROJECT MAY NOT RECEIVE A CERTIFICATE OF OCCUPANCY UNTIL THE LAST BMR UNIT HAS RECEIVED A CERTIFICATE OF OCCUPANCY. THE DIRECTOR MAY APPROVE A MODIFIED SCHEDULE IF THE TIMEING REQUIREMENT WILL CREATE UNREASONABLE DELAYS IN THE ISSUANCE OF CERTIFICATES OF OCCUPANCY FOR MARKET RATE UNITS.

BUILDING SECURITY — ARTICLE I - GENERAL PROVISIONS AND ADMINISTRATION

15.40.010 - PURPOSE.

THE PUPOSE OF THE PROVISIONS OF THIS CHAPTER IS TO PROTECT THE GENERAL HEALTH, SAFETY AND WELFARE OF THE PUBLIC AND THE PROTECTION OF PERSONS AND PROPERTY BY PROVIDING MIIMUM REQUIREMENTS TO SAFEGUARD PROPERTY AGAINST BURGLARY AND OTHER UNLOWFUL TRESPASSES. THE MINIMUM REQUIREMENTS WILL ACHIEVE THIS PURPOSE BY REGULATING AND CONTGROLLING THE DESIGN, CONSTRUCTION AND QUALITY OF MATERIALS AND EQUIPMENT AS THEY RELATE TO SECURITY OF ALL BUILDINGS AND STRUCTURES CONSTRUCTED AFTER THE EFFECTIVE DATE OF THE ORDINANCE CODIFIED IN THIS CHAPTER OR REMODELED WITHIN THE BOUNDARIES OF THE CITY AS REQUIRED IN SECTIONS 14050 AND 14051 OF THE CALIFORNIA PENAL CODE RELATING TO BUILDING SECURITY.
(ORD. 1861 N.S. / 11 (PART), 2007: ORD. 491 N.S. (PART), 1979; ORD. NO 2095 N.S., / 2, 11-20-2013)

15.40.020 - DEFINITIONS.

FOR THE PURPOSE OF THIS CHAPTER, CERTAIN TERMS ARE DEFINED AS FOLLOWS:

1. "ACTIVE DOOR" MEANS WHEN TWO DOORS ARE INSTALLED AS A PAIR, THE ACTIVE DOOR IS THE ONE WHICH MUT BE OPENED FIRST.
2. "ANTI-SHIM DEVICE." SOME SPRING BOLTS HAVE THIS ADDED FEATURE TO PREVENT THE SPRING BOLT FROM BEING DEPRESSED WHEN THE DOOR IS CLOSED BY SLIPPING OR SHIMMYING. THIS DEVICE IS NORMALLY ADJACENT TO THE BOLT AND IS DEPRESSED BY THE STRIKE WHEN THE DOOR IS CLOSED.
3. "ARMORED STRIKE" MEANS A METAL STRIKE PLATE BACKED UP BY STEEL, DESIGNED TO PREVENT JAMB PEELING, MORTISED INTO DOOR JAMB TO RETRAIN THE BOLT.
4. "AUXILLARY LOCKING DEVICE" MEANS A SECONDARY LOCKING SYSTEM ADDED TO THE PRIMARY LOCKING SYSTEM TO PROVIDE ADDITIONAL SECURITY.
5. "BOLT' MEANS A METAL BAR WHICH, WHEN ACTUATED, IS PROJECTED (OR "THROWN") EITHER HORIZONTALLY OR VERTICALLY INTO A RETAINING MEMBER, SUCH AS A STRIKE PLATE, TO PREVENT A DOOR OR WINDOW FROM MOVINJG OR OPENING.
6. "BURGLARY-RESISTANT GLAZING" MEANS THOSE MATERIALS AS DEFINED IN THE UNDERWRITERS LABORATORY BULLETIN 972.
7. "CBC" MEANS THE CALIFORNIA BUILDING CODE. THE CBC IS DEDICATED TO THE DEVELOPMENT OF BUILDING CONSTRUCTION AND SAFTEY TO THE PUBLIC BY UNIFORMITY IN THE BUILDING LAWS. THE CODE IS FOUNDED ON BROAD-BASE PERFORMANCE PRINCIPLES THAT MAKE POSSIBLE THE USE OF NEW MATERIALS AND NEW CONSTRUCTION SYSTEMS.
8. "COMMERCIAL BUILDING" MEANS A BUILDING, OR PORTION THEREOF, USED FOR A PURPOSE OTHER THAN A DWELLING.
9. "CYLINDER" MEANS THE SUBASSEMBLY OF A LOCK CONTAINING THE CYLINDER CORE, TUMBLER MECHANISM AND THE KEYWAY.
10. "CYLINDER GUARD" MEANS A FREE-TURNING SOLID METAL PROTECTIVE DEVICE USED TO ENCOMPASS THE CYLINDER OF A LOCK RENDERING IT LESS VULNERABLE TO WRENCHING AND TWISTING ATTACKS.
11. "DEAD BOLT" MEANS A METAL BOLT WHICH CANNOT BE MOVED WHEN THE DOOR IS LOCKED, AND MUST BE KEY OPERABLE AND KEY, THUMBTURN OR LEVER OPERABLE FROM THE INTERIOR. THE BOLT MUST PROJECT A MINIMUM OF ONE INCH FROM THE EDGE OF THE DOOR AND MUST CONTAIN A CYLINDER GUARD ON THE EXTERIOR SIDE WHEN THE CYLINDER IS EXPOSED.
12. "DEADLATCH" OR "DEADLOCKING LATCH" MEANS A SPRING-ACTIVATED LATCH BOLT HAVING A BEVELED END AND INCORPORATING A PLUNGER WHICH, WHEN DEPRESSED, AUTOMATICALLY LOCKS THE PROJECTED LATCH BOLT AGAINST RETURN BY END PRESSURE.
13. "DOOR" MEANS A HINGED, SLIDING OR OTHER MECHANICALLY OPERATED BARRIER WHICH MAY BE OPENED AND CLOSED TO ALLOW OR PREVENT ENTGRANCE OR EGRESS TO A BUILDING OR STRUCTURE.
14. "DOOR STOP" MEANS A PROJECTION ALONG THE TOP AND SIDES OF A DOOR JAMB WHICH CHECKS THE DOOR'S SWINGING ACTION.
15. "DOUBLE-CYLINDER DEAD BOLT" MEANS A DEAD BOLT LOCK WHICH CAN BE ACTIVATED ONLY BY A KEY ON BOTH THE INTERIOR AND EXTERIOR.
16. "DWELLING" MEANS A BUILDING OR PORTION THEREOF DESIGNED EXCLUSIVIELY FOR RESIDENTIAL OCCUPANCY, INCLUDING SINJGLE-FAMILY AND MULTI-FAMILY DWELLINGS.
17. "EXIST INDICATOR" MEANS A DEVICE WHICH SHOWS "OPEN" OR "LOCKED" CONDITION OF EXIT DOOR LOCK.
18. "FLUSHBOLT" MEANS A MANUAL, KEY-OPERATED OR TURN-OPERATED METAL BOLT NORMALLY USED ON INACTIVE DOORS AND ATTACHED TO THE TOP AND BOTTOM OF THE DOOR, ENGAGING IN THE HEAD AND THRESHOLD OF THE FRAME.
19. "HASP" MEANS A FASTING DEVICE CONSISTING OF A LOOP AND SLOTTED HINGE PLATE.
20. "JAMB" MEANS THE VERTICAL MEMEBERS OF A DOOR FRAME TO WHICH THE DOOR IS SECURED.
21. "MULTIFAMILY DWELLING" MEANS A BUILDING OR PORTION THEREOF DESIGNED FOR OCCUPANCY BY TWO OR MORE FAMILIES LIVING INDEPENDDENTLY OF EACH OTHER, INCLUDING HOTELS, MOTELS, APARTMENTS, DUPLEXES AND TOWNHOMES.
22. "PADLOCK" MEANS A LOCKING DEVICE WITH A HARDENED STEEL SHACKLE, LOCKING HEEL AND TOE, WITH MINIMUM FIVE PIN-TUMBLER OPERATION, WITH NONREMOVABLE KEY WHEN IN AN UNLOCKED POSITION.
23. "PANIC HARDWARE" MEANS A LATCHING DEVICE ON A DOOR ASSEMBLY FOR USE WHEN EMERGENCY EGRESS IS REQUIRED DUE TO FIRE OR OTHER THREAT TO LIFE SAFTEY, DEVICES DESIGNED SO THAT THEY WILL FACILITATE THE SAVE EGRESS OF PEOPLE IN CASE OF AN EMERGENCY WHEN IS APPLIED TO THE RELEASING DEVICE IN THE DIRECTION OF EXIT TRAVEL.
24. "SINGLE-CYLINDER DEAD BOLT" MEANS A DEAD BOLT LOCK WHICH IS ACTIVATED FROM THE OUTSIDE BY A KEY AND FROM THE INSIDE BY A KNOB, THUMB-TURN, LEVER OR SIMILAR MECHANISM.
25. "SOLID-CORE DOOR" MEANS A DOOR COMPOSED OF SOLID WOOD OR COMPOSED OF COMPRESSED WOOD EQUAL IN STRENGTH TO SOLID WOOD CONSTRUCTION.

BUILDING SECURITY — ARTICLE I - GENERAL PROVISIONS AND ADMINISTRATION

26. "STRIKE" MEANS A METAL PLATE ATTACHED TO OR MORTISED INTO A DOOR OR DOOR JAMB TO RECEIVE AND TO HOLD A PROJECTED LATCH BOLT AND/OR DEAD BOLT IN ORDER TO SECURE THE DOOR TO THE JAMB.
27. "UL LISTED" MEANS TESTED AND LISTED BY UNERWRITERS LABORATORY, INC.

(ORD. 1861 N.S. / 11 (PART), 2007: ORD. 491 N.S. (PART), 1979; ORD. NO. 2000 N.S. / 10, 1-26-2011; ORD. NO. 2095 N.S. / 2, 11-20-201

15.40.030 - ADMINISTRATION AND ENFORCEMENT - SCOPE

THE PROVISIONS SET FORTH IN THIS CHAPTER SHALL BE ADMINISTERED AND ENFORCED BY THE BUILDING OFFICIAL OR AUTHORIZED AGENT AND SHALL APPLY TO THE REQUALTION AND CONTROL OF THE DESIGN, CONSTRUCTION AND QUALITY OF MATERIALS AND EQUIPMENT AS THEY RELATE TO THE SECURITY OF ALL BUILDINGS AND STRUCTURES CONSTRUCTED ON REMODELED IN THE CITY AFTER THE EFFECTIVE DATE OF THE ORDINANCE CODIFIED IN THIS CHAPTER. BUILDINGS AND STRUCTURES CONSTRUCTED WITHIN INDUSCTRIAL PARKS, BUSINESS PARKS AND PLANNED UNIT DEVELOPMENTS (M-P AND PUD ZONES) ARE EXEMPT FROM THE PROVISIONS OF THIS CHAPTER EXCEPT THAT DEVELOPERS OF SUCH PROJECTS SHALL MEET WITH THE POLICE DEPARTMENT CRIME PREVENTION UNIT AND THE BUILDING OFFICIAL TO DEVELOP APPROPRIATE SECURTIY MEASURES.
(ORD. 1861 N.S. / 11 (PART), 2007: ORD. 615 N.S., 1983: ORD. 491 N.S. (PART), 1979; ORD. NO. 2000 N.S., / 10, 1-26-2011; ORD. NO 209

15.40.040 - APPLICABILITY AND COMPLIANCE.

A. THE PROVISIONS OF THIS CHAPTER SHALL APPLY TO NEW CONSTRUCTION ADN TO BUILDINGS OR STRUCTURES TO WICH ADDITIONS OR ALTERATIONS ARE MADE EXCEPT AS SPECIFICALLY PROVIDED BVY THIS CHAPTER.
B. EXISTING MULTIFAMILY DWELLING UNITS WHICH ARE CONVERTED TO PRIVATELY OWNED FAMILY UNITS (CONDOMINIUMS) SHALL COMPLY WITH THE PROVISIONS OF ARTICL II OF THIS CHAPTER.
C. ANY EXISTING STRUCTURE WHICH CONVERTS FROM ITS ORIGINAL OCCUPANCY GROUP, AS DESIGNATED IN THE CALIFORNIA BUILDING CODE, SHALL COMPLY WITH THE PROVISIONS OF THIS CHAPTER.

(ORD. 1861 N.S. / 11 (PART), 2007: ORD. 491 N.S. (PART), 1979; ORD. NO. 2000 N.S., / 10, 1-26-2011; ORD. NO. 2085 N.S., / 2, 11-20-2013)

15.40.050 - EXEMPTIONS

ANY BUILDING AS DEFINED IN THE CBC AND TITLE 19 OF THE CALIFORNIA ADMINISTRATIVE CODE, REQUIRING SPECIAL TYPE RELEASING LATCHING OR LOCKING DEVICES, OTHER THAN DESCRIBED IN THIS CHAPTER, SHALL BE EXEMPT FROM THE PROVISIONS OF THIS CHAPTER RELATING TO LOCKING DEVICES OF INTERIOR AND/OR EXTERIOR DOORS. (THIS SECTION IS INTENDED TO PREVENT CONFUSION AS TO REQUIREMENTS FOR WHAT IS KNOW AS "PANIC HARDWARE.")

(ORD. 1861 N.S. / 11 (PART), 2007: ORD. 491 N.S. (PART), 1979; ORD. NO. 2095 N.S., / 2, 11-20-2013)

15.40.060 - RESPONSIBILITY FOR COMPLIANCE.

THE APPLICANT SHALL BE RESPONSIBLE FOR COMPLIANCE WITH THE PROVISIONS SET FORTH IN THIS CHAPTER.

(ORD. 1861 N.S. / 11 (PART), 2007: ORD. 491 N.S. (PART), 1979; ORD. NO. 2095 N.S., / 2, 11-20-2013)

15.40.070 - ALTERNATE MATERIALS AND METHODS OF CONSTRUCTION.

A. THE PROVISIONS OF THIS CHAPTER ARE NOT INTENDED TO PREVENET THE USE OF ANY MATERIAL OR METHOD OF CONSTRUCTION NOT SPECIFICALLY PRESCRIBED BY THIS CHAPTER PROVIDED ANY SUCH ALTERNATE HAS BEEN APPROVED BY THE ENFORCING AUTHORITY, NOR IS IT THE INTENTION OF THIS CHAPTER TO EXCLUDE ANY SOUND METHOD OF STRUCTURAL DESIGN OR ANALYSIS NOT SPECIFICALLY PROVIDED FOR IN THIS CHAPTER. MATERIALS, METHODS OF CONSTRUCTION, OR STRUCTURAL DESIGN LIMITATIONS PROVIDED FOR IN THIS CHAPTER ARE TO BE USED UNLESS AN EXCEPTION IS GRANTED BY THE ENFORCING AUTHORITY.

B. THE ENFORCING AUTHORITY MAY APPROVE ANY SUCH ALTERNATE PROVIDED THEY FIND THE PROPOSED DESIGN TO BE SATISFACTORY AND THE MATERIAL AND METHOD OF WORK IS, FOR THE PURPOSE INTENDED, AT LEAST EQUIVALENT TO THAT PRESCRIBED IN THIS CHAPTER IN QUALITY, STRENGTH, EFFECTIVENESS, BURGLARY RESISTANCE, DURABILITY AND SAFETY.

(ORD. 1861 N.S. / 11 (PART), 2007: ORD. 491 N.S. (PART), 1979; ORD. NO. 2095 N.S., / 2, 11-20-2013)

15.40.080 - KEYS AND LOCKS FOR TRACTS OR COMMERCIAL DEVELOLPMENTS.

UPON OCCUPANCY BY THE OWNER OR PROPRIETOR, EACH SINGLE UNIT IN A TRACT OR COMMERCIAL DEVELOPMENT, CONSTRUCTED UNDER THE SAME GENERAL PLAN, SHALL HAVE LOCKS USING COMBINATIONS WHICH ARE INTERCHANGE-FREE FROM LOCKS USED IN ALL OTHER SEPEARATE DWELLINGS, PROPRIETORSHIPS OR SIMILAR DISTINC OCCUPANCIES.
(ORD. 1861 N.S. / 11 (PART), 2007: ORD. 491 N.S. (PART), 1979; ORD. NO. 2095 N.S., / 2, 11-20-2013)

15.40.090 - METHOD OF ENFORCEMENT, APPEALS AND VARIANCES.

METHODS OF THE ENFORCEMENT, APPEAL AND THE GRANT OF VARIEANCES UNDER THIS CHAPTER SHGALL BE THOSE SET FORTH WITHIN THE MUNICIPAL CODE OF THE CITY.

(ORD. 1861 N.S. / 11 (PART), 2007: ORD. 491 N.S. (PART), 1979; ORD. NO. 2095 N.S., / 2, 11-20-2013)

15.40.100 - CHAPTER PROVISIONS NOT EXCLUSIVE - LIFE SAFETY FACTOR.

NONE OF THE PROVISIONS SET FORTH IN THIS CHAPTER SHALL SUPERSEDE ANY LOCAL, STATE OR FEDERAL LAWS, REGULATIONS OR CODES DEALING WITH THE LIFE SAFETY FACTOR. ENFORCEMENT OF THESE PROVISIONS SHALL BE IN COOPERATION WITH THE LOCAL FIRE AUTHORITY TO AVOID CONFLICT WITH FIRE LAWS. NO PORTION OF THIS CHAPTER SHALL SUPERSEDE ANY LOCAL, STATE OR FEDERAL LAW, REGULATION OR CODES DEALING WITH LIFE SAFETY FACTORS.

(ORD. 1861 N.S. / 11 (PART), 2007: ORD. 491 N.S. (PART), 1979; ORD. NO. 2095 N.S., / 2, 11-20-2013)

15.40.110 - RIGHT OF ENTRY.

THE ENFORCING AUTHORITY SHALL HAVE THE RIGHT, AND IS HEREBY AUTHORIZED AND EMPOWERED, TO EENTER OR GO ON OR ABOUT ANY BUILDING OR PREMISES BETWEEN EIGHT A.M. AND FIVE P.M. FOR THE PURPOSE OF INSPECTING THE PHYSICAL SECURITY OF SUCH BUILDINGS OR PREMISES, OR FOR ANY OTHER PURPOSES CONSISTENT WITH THIS CHAPTER. THE ENFORCING AUTHORITY SHALL BE GIVEN ACCESS TO ANY AREA OF THE BUILDING OR PREMISES UPON ORAL NOTIFICATION TO THE RESPONSIBLE PERSON, AND UPON EXHIBITING SUITABLE EVIDENCE OF THEIR IDENTITY AND AUTHORITY; PROVIDED, HOWEVER, THAT EXCEPT IN AN EMERGENCY SITUATION, AN INSPECTION WARRENT ISSURED PURSUANT TO TITLE 13, PART 3 OF THE CODE OF CIVIL PROCEDURES (SECTIONS 1322.50 TO 1322.57, INCLUSIVE) SHALL FIRST BE SECURED WHEN ENTRY OR ACCESS THERETO IS REFUSED, IT IS UNLAWFUL TO REFUSE TO ADMIT SUCH MEMBER WHEN AN INSPECTION WARRANT IS NOT REQUIRED.

(ORD. 1861 N.S. / 11 (PART), 2007: ORD. 491 N.S. (PART), 1979)
(ORD. 2095 N.S., / 2, 11-20-2013; ORD. NO. 2276 N.S., / 60, 5-2-2018)

15.40.120 - APPEALS.

IN ORDER TO PREVENT OR LESSEN THE UNNECESSARY HARDSHIP OR PRACTICAL DIFFICULTIES IN EXCEPTIONAL CASES WHERE IT IS DIFFICULT OR IMPOSSIBLE TO COMPLY WITH THE STRICT LETTER OF THIS CHAPTER, THE OWNER OF HIS DESIGNATED AGENT SHALL HAVE THE OPTION TO APPLY FOR AN EXEMPTION FROM ANY PROVISION OF THIS CHAPTER TO THE CITY COUNCIL. THE CITY COUNCIL SHALL EXERCISE ITS POWERS ON THESE MATTERS IN SUCH A WAY THAT THE PUBLIC WELFARE IS SECURED, AND SUBSTANTIAL JUSTICE DONE MOST NEARLY IN ACCORD WITH THE INTENT AND PURPOSE OF THIS CHAPTER.

(ORD. 1861 N.S. / 11 (PART), 2007: ORD. 491 N.S. (PART), 1979; ORD. NO. 2095 N.S., / 2, 11-20-2013)

15.40.130 - VIOLATION.

IT IS UNLAWFUL FOR ANY PERSON, FIRM OR CORPORATION TO ERECT, CONSTRUCT, ENLARGE, ALTER, MOVE, IMPROVE, CONVERT OR DEMOLISH, EQUIP, USE, OCCUPY OR MAINTAIN ANY BUILDING OR STRUCTURE IN THE CITY, OR CAUSE THOSE THINGS TO BE DONE, CONTRARY TO OR IN VIOLATION OF ANY OF THE PROVISIONS OF THIS CHAPTER.
(ORD. NO. 2276 N.S., / 60, 5-2-2018)
EDITOR'S NOTE - ORD. NO. 2276 N.S., / 60, ADOPTED MAY 2, 2018, AMENDED / 15.40.130 IN ITS ENTIRETY TO READ AS HFEREIN SET OUT. FORMER / 15.40.130 PERTAINED TO VIOLATION - PENALTY AND DERIVED FROM ORD. 491 N.S. (PART), ADOPTED IN 1979; AND ORD. NO. 2095 B,S,M . 2M ADIOTED BIV, 20M 2013,

ARTICLE II - SINGLE-FAMILY DWELLINGS

15.40.140 - APPLICABILITY.

MINIMUM STANDARDS FOR DOORS, WINDOWS, GARAGE DOORS AND HOUSE NUMBERS IN SINGLE-FAMILY DWELLINGS ARE AS SET FORTH IN SECTIONS 15.40.150 TO 15.40.210.
(ORD. 1861 N.S. / 11 (PART), 2007: ORD. 491 N.S. (PART), 1979; ORD. NO. 2095 N.S., / 2, 11-20-2013)

15.40.150 - HOUSE NUMBERS.

A. ALL RESIDENTIAL DWELLINGS SHALL DISPLAY A STREET NUMBER IN A PROMINENT LOCATION ON THE STREET SIDE OF THE RESIDENCE IN SUCH A POSITION THAT THE NUMBER IS EASILY VISIBLE TO APPROACHING EMERGENCY VEHICLES. THE NUMBERALS SHALL BE NO LESS THAN FOUR INCHCES IN HEIGHT AND SHALL BE OF A CONTRASTING COLOR TO THE BACKGROUND TO WHICH THEY ARE ATTACHED.
B. HOMES WHOSE ADDRESS NUMBERS ARE NOT CLEARLY VISIBLE FROM FIFTY FEET OF THE ROADWAY SURFACE OR THE FRONT OF THE HOUSE IS BELOW OR ABOVE GRADE LEVEL OR THE FRONT OF THE HOUSE IS BLOCKED BY LANDSCAPING OR IN ANY OTHER WAY THEIR IMMEDIATE OBSERVATION IS BLOCKED, SHALL BE MARKED AT THE STREET ENTRANCE TO THE HOUSE AND ON THE HOUSE ITSELF SO AS TO MAKE THE HOUSE IMMEDIATELY IDENTIFIABLE.

(ORD. 1861 N.S. / 11 (PART), 2007: ORD. 491 N.S. (PART), 1979; ORD. NO. 2095 N.S., / 2, 11-20-2013)

15.40.160 - EXTERIOR DOORS.

A. EXTERIOR DOORS AND DOORS LEADING FROM THE GARAGE AREA INTO THE DWELLING UNIT SHALL BE OF SOLID CORE CONSTRUCTION WITH A MINIMUM THICKNESS OF ONE AND THREE-FOURTHS INCHES, OR WITH PANELS NOT LESS THAN FIVE-SIXTEENTHS-INCH THICK.
B. ALL EXTERIOR DOORS FOR SINGLE-FAMILY DWELLINGS SHALL HAVE A SINGLE-CYLINDER OR DOUBLE-CYLINDER DEAD BOLT LOCK. THE BOLT SHALL HAVE A MINIMUM THROW OF AT LEAST ONE INCH AND BE CONSTRUCTED SO AS TO REPEL CUTTING TOOL ATTACK. (IT MAY ABE DESIRED TO HAVE DAD BOLT LOCKS CONSTRUCTED SO AS TO PREVENT THE KEY FROM BEING REMOVED FROM THE INTERIOR CYLINDER WHEN THE BOLT IS PROJECTED.) A DUAL LOCKING MECHANISM CONSTRUCTED SO THAT BOTH DEAD BOLT AND LATCH CAN BE RETRACTED BY A SINGLE ACTION OF THE INSIDE DOORKNOB, OR LEVER, MAY BE SUBSTITUTED PROVIDED IT MEETS ALL OTHER SPECIFICATIONS FOR LOCKING DEVICES.
C. DOORS-LEADING FROM ENCLOSED GARAGE AREAS INTO SINGLE-FAMILY DWELLINGS SHALL BE EQUIPPED WITH A SINGLE-CYLINDER OR DOUBLE -CYLINDER DEAD BOLT LOCK. ALTERNATE DEVEICES EQUALLY RESISTANT TO ILLEGAL ENTRY MAY BE SUBSTITUTED SUBJECT TO PRIOR APPROVAL OF THE BUILDING OFFICIAL OR HIS AUTHORIZED AGENT.
D. EXCEPT WHERE CLEAR VISION PANELS ARE INSTALLED, ALL FRONT EXTERIOR DOORS SHALL BE EQUIPPED FWITH A WIDE-ANGLE (ONE-HUNDERED-EIGHTY-DEGREE) DOOR VIEWER.
E. OPENINGS FOR DELIVERY OF MAIL WILL BE ALLOWED AND THOSE OPENINGS SHALL BE NO LARGER THAN TWENTY-FOUR SQUARE INCHES. THE OPENING ITSELF SHALL BE NO HIGHER THAN ONE ANDN ONE-HALF INCHES AND SHALL BE SO CONSTRUCTED TO PROHIBIT ACCESS TO THE INTERIOR DOOR KNOB.
F. EXTERIOR DOORS SWINGING OUT SHALL HAVE NONREMOVABLE HINGES WITH STUDS.
G. EXTERIOR DOORS SWINGING IN SHALL HAVE RABBITED JAMBS.
H. JAMBS FOR ALL DOORS SHALL BE CONSTRUCTED OR PROTECTD SO AS TO PREVENT VIOLATION OF THE STRIKE. JAMBS MUST INCLUDE MINIMUM TWO-AND-ONE-HALF-INCH SOLID CONSTRUCTION AROUND THE STRIKE AREA.
I. GLAZING IN EXTERIOR DOORS OR WITHIN FORTY INCHES OF ANY LOCKING MECHANISM SHALL BE OF FULLY TEMPERED GLASS OR RATED BURGLARY RESISTANT GLAZING, EXCEPTG WHEN DOUBLE-CYLINDER DEAD BOLT LOCKS ARE INTALLED.
J. ON DOUBLE DOORS, THE ACTIVE LEAF SHALL BE EQUIPPED WITH A SINGLE-CYLINDER OR DOUBLE-CYLINDER DEAD BOLT LOCK. THE BOLT SHALL HAVE A MINIMUM PROJECTION OF ONE INCH AND BE CONSTRUCTED SO AS TO REPEL CUTTING TOOL ATTACK.
K. THE INACTIVE LEAF OF DOUBLE DOORS SHALL BE EQUIPPED WITH METAL FLUSH BOLTS HAVING A MINIMUM THROW OF FIVE-EIGHTHS INCH INTO THE HEAD AND THRESHOLD OF THE DOOR FRAME.

(ORD. 1861 N.S. / 11 (PART), 2007: ORD. 491 N.S. (PART), 1979, ORD. NO. 2095 N.S., / 2, 11-20-2013)

15.40.170 - SLIDING PATIO-TYPE DOORS.

SLIDING PATIO DOORS OPENING ONTO PATIOS OR BALCONIES WHICH ARE OTHERWISE ACCESSIBLE FROM THE OUTSIDE:

A. IT WILL BE PERMISWSIBLE FOR SINGLE SLIDING PATIO DOORS TO HAVE THE MOVABLE SECTION OF THE DOOR SLIDE ON THE OUTSIDE AS WELL AS THE INSIDE OF THE DOOR, ALTHOUGH BOTH SHALL BE PROVIDED DWITH PINS OR SLIDING DOOR LOCKS THAT WILL RENDER THE DOOR INCAPABLE OF BEING REMOVED. DOORS SHALL COMPLY WITH TESTS AS SETG FORTH IN SECTION 15.40.020.
B. SLIDING DOORS SHALL BE EQUIPPED WITH A VERTICAL-BOLT-TYPE LOCK WHICH USES A HOOK-TYPE BOLT TO GRIP THE DOOR AND FRAME TOGETHER. MOUNTING SCREWS FOR THE LOCK SHALL BE INACCESSIBLE FROM THE OUTSIDE. LOCK BOLTS SHALL BE HARDENED STEEL OR HAVE HARDENED STEEL INSERTS AND SHALL BE CAPABLE OF WITHSTANDING FORCE OF EIGHT HUNDRED POUNDS APPLIED IN ANY DIRECTION. SLIDING DOORS SHALL COMPLY WITH TESTS AS SET FORTH IN SECTION 15.40.020.
C. DOUBLE SLIDING PATIO DOORS MUST BE LOCKED AT THE MEETING RAIL AND MEET THE LOCKING REQUIREMENTS OF SUBSECTION BE OF THIS SECTION.

(ORD. 1861 N.S. / 11 (PART), 2007: ORD. 491 N.S. (PART), 1979)
(ORD. NO. 2095 N.S., / 2, 11L-20L-2013; ORD. NO. 2221 N.S., / 5, 11-2-2016)

15.40.180 - WINDOWS - SECURITY REQUIRED WHEN.

A. A WINDOW, SKYLIGHT, OR OTHER LIGHT FORMING A PART OF THE ENCLOSURE OF A DWELLING UNIT SHALL BE CONSTRUCTED, INSTALLED, AND SECURED AS SET FORTH IN SECTION 15.40.190 WHEN SUCH WINDOW, SKYLIGHT, OR LIGHT IS NOT MORE THAN TWELVE FEET VERTICALLY AND SIX FEET HORIZONTALLY OF A STREET, HIGHWAY, YARD, COURT, PASSAGEWAY, CORRIDOR, BALCONY, PATIO, BREEZEWAY, OR ANY PORTION OF THE BUILDING WHICH IS AVAILABLE FOR USE BY THE PUBLIC OR OTHER TENANTS, OR SIMILAR AREA. A WINDOW ENCLOSING A PRIVATE GARAGE WITH AN INTERIOR DOOR LEADING DIRECTLY TO A DWELLING UNIT SHALL ALSO COMPLY WITH SECTION 15.40.190.

(ORD. 1861 N.S. / 11 (PART), 2007: ORD. 491 N.S. (PART), 1979)
(ORD. NO. 2095 N.S., / 2, 11L-20L-2013; ORD. NO. 2221 N.S., / 5, 11-2-2016)

15.40.190 - WINDOWS - PROTECTION METHODS.

A. WINDOWS SHALL BE SO CONSTRUCTED THAT WHEN THE WINDOW IS LOCKED IT CANNOT BE LIFTED FROM THE FRAME.
B. WINDOW LOCKING DEVICES SHALL BE CAPABLE OF WITHSTANDING FORCE OF THRESS HUNDERED POUNDS APPLIED IN ANY DIRECTION. (SLIDING WINDOWS SHALL COMPLY WITH TESTS AS SET FORTH IN SECTION 15.40.020.)
C. LOUVERED GLASS WINDOWS SHALL NOT BE USED.

(ORD. 1861 N.S., / 11 (PART), 2007: ORD. 491 N.S. (PART), 1979; ORD. NO 2095 N.S., / 2, 11-20-2013)

15.40.200 - GARAGE DOORS.

ALL GARAGE DOORS SHALL BE SECURED AS FOLLOWS:

A. OVERHEAD GARAGE DOORS SHALL NOT HAVE BOTTOM VENTS EXCEPT THOSE DOORS HAVING DOUBLE-LOUVERED OR SHIELDED VENTGS OR APPROVED ALTERNATE DEVICES TO PROTECT THE LOCKING MECHANISMS.
B. MANUALLY OPERATED GARAGE DOORS SHALL BE PROVIDED WITH SLIDE BOLTS OR ANY OTHER LOCKING DEVICE THAT WILL PROHIBIT THE GARAGE DOOR FROM BEING FORCED OPEN FROM EITHER SIDE.

(ORD. 1861 N.S., / 11 (PART), 2007: ORD. 491 N.S. (PART), 1979; ORD. NO 2095 N.S., / 2, 11-20-2013)

15.40.210 - ALTERNATIVES.

NOTHING CONTAINED IN THIS ARTICLE SHALL BE DEEMED TO PROHIBIT THE USE OF ALTERNATE MATERIALS, SECONDARY LOCK DEVICES OR MEASURES WHEN SUCH ALTERNATE PROVISIONS ARE DEEMED BY THE BUILDING OFFICIAL AS PROVIDING EQUIVALENT SECURITY BASED ON THE RECOMMENDATIONS OF THE CRIME PREVENTION UNIT OF THE POLICE DEPARTMENT.

(ORD. 1861 N.S., / 11 (PART), 2007: ORD. 491 N.S. (PART), 1979; ORD. NO 2095 N.S., / 2, 11-20-2013)

ARTICAL III - NONRESIDENTIAL BUILDINGS

15.40.220 - APPLICABILITY.

MINIMUM STANDARDS FOR DOORS, WINDOWS, TRANSOMS AND AWNING WINDOWS, ROOF OPENINGS, ADDDRESS NUMBERS, AND OPFEN PARKING LOTS IN NONRESIDENTIAL BUILDINGS ARE SET OUT IN SECTIONS 15.40.230 THROUGH 15.40.320.
(ORD. 1861 N.S., / 11 (PART), 2007: ORD. 491 N.S. (PART), 1979; ORD. NO 2095 N.S., / 2, 11-20-2013)

15.40.230 - ADDRESS NUMBERS.

A. THE ADDRESS NUMBER OF EVERY COMMERCIAL BUILDING SHALL BE ILLUMINATED DURING THE HOURS OF DARKNESS SO THAT IT WILL BE EASILY VISIBLE FROM THE STREET. THE NUMERALS IN THESE NUMBERS SHALL BE NO LESS THAN SIX INCHES IN HEIGHT AND BE OF A COLOR CONTRASTING TO THE BACKGROUND. IN ADDITION, ANY BUSINESS WHICH AFFORDS VEHICULAR ACCESS TO THE REAR THROUGH ANY DRIVEWAY, ALLEYWAY OR PARKING LOT SHALL ALSO DISPLAY THE SAME NUMBERS ON THE REAR OF THE BUILDING.
B. ALL EXTERIOR COMMERCIAL DOORS, DURING THE HOURS OF DARKNESS, SHALL BE ILLUMINATED WITH A MINIMUM OF ONE FOOT-CANDLE OF LIGHT. ALL EXTERIOR BULBS SHALL BE PROTECTED BY VANDALISM-RESISTANT COVERS.

(ORD. 1861 N.S., / 11 (PART), 2007: ORD. 491 N.S. (PART), 1979; ORD. NO 2095 N.S., / 2, 11-20-2013)

15.40.240 - DOORS.

ALL EXTERIOR DOORS SHALL BE SECURED AS FOLLOWS:

A. A SINGLE DOOR SHALL BE EQUIPPED WITH A SINGLE-CYLINDER OR DOUBLE-CYLINDER DEAD BOLT. THE BOLT SHALL HAVE A MINIMUM PROJECTION OF ONE INCH AND BE CONSTRUCTED SO AS TO REPEL CUTTING TOOL ATTACK. A HOOK OR EXPANDING BOLT CAN BE USED PROVIDING IT HAS A THROW OF THREE-FOURTHS INCH, DEPENDING ON TYPE OF OCCUPANCY.

THE PROVISIONS OF THE PRECEDING PARAGRAPH DO NOT APPLY WHERE (1) PANIC HARDWARE IS REWQUIRED, OR (2) AN EQUIVALENT DEVICE IS APPROVED BY THE ENFORCING AUTHORITY.
ON DOUBLE DOORS, THE ACTIVE LEAF SHALL BE SECURED WITH THE TYPE OF LOCK REQUIRED FOR SINGLE DOORS IN SUBSECTION A OF THIS SECTION. THE INACTIVE LEAF OF A DOUBLE DOOR SHALL BE EQUIPPED WITH METAL FLUSH BOLTS HAVING A MINIMUM THROW OF FIVE-EIGHTHS INCH INTO THE HEAD AND THRESHOLD OF THE DOOR FRAME.

15.40.240 - DOORS (CONT.)

C. ANY SINGLE OR PAIR OF DOORS REQUIRING LOCKING AT THE BOTTOM OR TOP RFAIL SHALL HAVE LOCKS WITH A MINIMUM FIVE-EIGHTHS-INCH THROW AT TOP AND BOTTOM RAILS.
D. EXTERIOR SLIDNG COMMERCIAL ENTRANCES SHALL BE SECURED AS SET OUT IN SUBSECTIONS A AND B OF THIS SECTION WITH SPECIAL ATTENTION GIVEN TO SAFETY REGULATIONS. SLISDING DOORS SHALL MEET WITH THE FIRE CODE IF FOR EXIT PURPOSES.
E. ROLLING OVERHEAD DOORS, SOLID OVERHEAD SWINGING, SLIDING OR ACCORDION-TYPE GARAGE DOORS SHALL BE SECURED WITH A CYLINDER LOCK ON THE INSIDE AND/OR PADLOCKS ON BOTH SIDES OF THE DOOR, WHEN NOT OTHERWISE CONTROLLED OR LOCKED BY ELECTRIC POWER OPERATION.
F. METAL ACCORDION GRATE OR GRILL-TYPE DOORS SHALL AE EQUIPPED WITH METAL GUIDE TRACKS ON TOP AND BOTTOM, AND A CYLINDER LOCK AND/OR PADLOCK. THE BOTTOM TRACK SHALL BE SO DESIGNED THAT THE DOOR CANNOT BE LIFTED FROM THE TRACK WHEN THE DOOR IS IN A LOCKED POSITION.
G. OUTSIDE HINGES ON ALL EXTERIOR DOORS SHALL BE PROVIDED WITH NONREMOVABLE PINS WHEN USING PIN-TYPE HINGES.
H. EXCEPT WHEN DOUBLE-CYLINDER DEAD BOLTS ARE UTILIZED, THE GLASS PANELS ADJACENT TO DOOR FRAMES OR WITHING FORTY INCHES OF ANY DOOR LOCKING MECHANISM SHALL BE CONSTRUCTED OR PROTECTED AS FOLLOWS:
   1. FULLY TEMPERED GLASS OR RATED BURGLARY-RESISTANT GLAZING; OR
   2. IRON OR STEEL GRILLS OF AT LEAST ONE-EIGHTH-INCH MATERIAL WITH A MINIMUM TWO-INCH MESH SECURED ON THE INSIDE OF THE GLAZING MAY BE UTILIZED; OR
   3. THE GLAZING SHALL BE COVERED WITH IRON BARS OF A LEAST ONE-HALF-INCH ROUND OR ONE-INCH-BY-ONE-FOURTH-INCH FLAT STEEL MATERIAL, SPACED NOT MORE THAN FIVE INCHES APART, SECURED ON THE INSIDE OF THE GLAZING.
   4. SUBDIVISIONS 2 AND 3 OF THIS SUBSECTION SHALL NOT INTERFERE WITH THE OPERATION OF OPENING WINDOWS IF SUCH WINDOWS ARE REQUIRED TO BE OPENABLE BY THE CALIFORNIA BUILDING CODE.
I. DOORS SWINGING IN SHALL HAVE RABBETED JAMBS.
J. JAMBS FOR ALL DOORS SHALL ABE CONSTRUCTED AS FOLLOWS:
   1. WOODEN FRAMES SHALL BE A MINIMUM OF TWO INCHES THICK.
   2. HOLLOW STEEL FRAMES CAN BE USED IF THE RESIDUAL AIR SPACE BEHIND THE FRAME IS FILLED WITH A CRUSH-RESISTANT MATERIAL SUCH AS CEMENT GROUT, ESPECIALLY IN THE AREA OF THE STRIKE.
K. ALL EXTERIOR COMMERCIAL DOORS, DURING THE HOURS OF DARKNESS, SHALL BE ILLUMINATED WITH A MINIMUM OF ONE FOOT-CANDLE OF LIGHT. ALL EXTERIOR BULBS SHALL BE PROTECTED BY VANDALISM-RESISTANT COVERS.

(ORD. 1861 N.S. / 11 (PART), 2007: ORD. 491 N.S. (PART), 1979)
(ORD. NO. 2095 N.S., / 2, 11-20-2013)

15.40.250 - WINDOWS - SECURITY REWQUIREMENTS GENERALLY.

A. WINDOWS SHALL BE DEEMED ACCESSIBLE IF LESS THAN TWELVE FEET ABOVE THE GROUND. ACCESSIBLE REAR AND SIDE WINDOWS NOT VIEWABLE FROM THE STREET SHALL CONSIST OF FULLY TEMPERED GLASS OR BURGLARY-RESISTANT GLAZING.
B. IF THE ACCESSIBLE SIDE OR REAR WINDOW IS OF THE OPERABLE TYPE IT SHALL BE SECURED ON THE INSIDE WITH A LOCKING DEVICE CAPABLE OF WITHSTANDING A FORCE OF THREE HUNDRED POUNDS APPLIED IN ANY DIRECTION.
C. LOUVERED WINDOWS SHALL NOT BE USED WITHIN EIGHT FEET OF ANY ACCESSIBLE AREA.
D. OUTSIDE HINGES ON ALL ACCESSIBLE SIDE AND REAR GLASS WINDOWS SHALL BE PROVIDED WITH NONREMOVABLE PINS. IF THE HINGE SCREWS ARE ACCESSIBLE, THE SCREWS SHALL BE OF THE NONREMOVABLE TYPE.
E. THE FOLLOWING WINDOW BARRIERS MAY BE USED BUT SHALL BE SECCURED WITH NONREMOVABLE BOLTS:
   1. INSIDE OR OUTSIDE IRON BARS OF AT LEAST ONE-HALF-INCH ROUND OR ONE-FOURTH-INCH FLAT STEEL MATERIAL, SPACED NOT MORE THAN FIVE INCHES APART AND SECURELY FASTENED; OR
   2. INSIDE OR OUTSIDE IRON OR STEEL GRILLS OF AT LEAST ONE-EIGHTH-INCH MATERIAL WITH NOT MORE THAN A TWO-INCH MESH AND SECURELY FASTENED:
   3. THE PROTECTIVE BARS OR GRILLS SHALL NOT INTERFERE WITH THE OPERATION OF OPENING WINDOWS IF SUCH WINDOWS ARE REQUIRED TO BE OPENABLE BY THE CALIFORNIA BUILDING CODE. WINDOW OPENINGS REQUIRED BY THE BUILDING CODE FOR ACCESS BY THE FIRE DEPARTMENT SHALL BE PROTECTED BY A MATERIAL APPROVED BY THE FIRE DEPARTMENT.

(ORD. 1861 N.S. / 11 (PART), 2007: ORD. 491 N.S. (PART), 1979)
(ORD. NO. 2095 N.S., / 2, 11-20-2013)

15.40.260 - TRANSOMS AND AWNING WINDOWS.

ALL EXTERIOIR TRANSOMS AND AWNING WINDOWS EXCEEDING SIXTY SQUARE INCHES ON THE SIDE AND REAR OF ANY BUILDING OR PREMISES USED FOR BUSINESS PURPOSES SHALL BE PRTECTED BY ONE OF THE FOLLOWING:

A. FULLY TEMPERED GLASS OR RATED BURGLARY-RESISTANT GLAZING; OR
B. IRON OR STEEL GRILLS OF AT LEAST ONE-EIGHTH-INCH MATERIAL WITH A MINIMUM TWO-INCH MESH SECURELY FASTENED; OR
C. IRON BARS OF AT LEAST ONE-HALF-INCH ROUND OR ONE-BY-ONE-FOURTH-INCH FLAT STEEL MATERIAL SPACED NOT MORE THAN FIVE INCHES APART AND SECURELY FASTENED;
D. THE PRTECTIVE BARS OR GRILLS SHALL NOT INTERFERE WITH OPERATION OF OPENING THE TRANSOMS IF SUCH TRANSOMS ARE REQUIRED TO BE OPENABLE BY THE CALIFORNIA BUILDING CODE.

(ORD. 1861 N.S. / 11 (PART), 2007: ORD. 491 N.S. (PART), 1979)
(ORD. NO. 2000 N.S., / 10, 1-26-2011; ORD. NO. 2095 N.S., / 2-11-20-2013)

15.40.270 - ROOF OPENINGS.

ALL SKYLIGHTS ON THE ROOF OF ANY BUILDING OR PREMISES USED FOR BUSINESS PURPOSES SHALL BE PROVIDED WITH:

A. RATED BUIRGLARY RESISTANT GLAZING: OR
B. IRON BARS OF AT LEAST ONE-HALF-INCH ROUND OR ONE-BY-ONE-FOURTH-INCH FLAT STEEL MATERIAL UNDER THE SKYLIGHT AND SECURELY FASTENED; OR
C. A STEEL GRILL OF AT LEAST ONE-EIGHTH-INCH MATERIAL WITH A MAXIMUM TWO-INCH MESH UNDER THE SKYLIGHT AND SECURELY FASTENED.

(ORD. 1861 N.S. / 11 (PART), 2007: ORD. 491 N.S. (PART), 1979)
(ORD. NO 2095 N.S., / 2, 11-20-2013)

15.40.280 - HATCHWAY OPENINGS.

ALL HATCHWAY OPENINGS ON THE ROOF OF ANY BUILDING OR PREMISES USED FOR BUSINESS PURPOSES SHALL BE SECURED AS FOLLOWS:

A. IF THE HATCHWAY IS OF WOODEN MATERIAL, IT SHALL BE COVERED ON THE INSIDE WITH AT LEAST SIXTEEN U.S. GAUGE SHEET METAL, OR ITS EQUIVALENT, ATTACHED WITH SCREWS.
B. THE HATCHWAY SHALL BE SECURED FROM THE INSIDE WITH A SLIDE BAR OR SLIDE BOLTS. (APPROVAL FROM THE FIRE DEPARTMENT IS NEEDED.)
C. OUTSIDE HINGES ON ALL HATCHWAY OPENINGS SHALL BE PROVIDED WITH NONREMOVABLE PINS WHEN USING PIN-TYPE HINGES.

(ORD. 1861 N.S. / 11 (PART), 2007: ORD. 491 N.S. (PART), 1979)
(ORD. NO 2095 N.S., / 2, 11-20-2013)

15.40.290 - AIR DUCT OR VENT OPENINGS.

A. ALL AIR DUCT OR AIR VENT OPENINGS EXCEEDING NINETY-SIX SQUARE INCHES ON THE ROOF OR EXTERIOR WALLS OF ANY BUILDING OR PREMISES USED FOR BUSINESS PURPOSES SHALL BE SECURED BY COVERING THEM WITH EITHER OF THE FOLLOWING:
   1. IRON BARS OF AT LEAST ONE-HALF-INCH ROUND OR ONE-BY-ONE-FOURTH-INCH FLAT STEEL MATERIAL SPACED ON MORE THAN 5 INCHES APART AND SECURELY FASTENED; OR
   2. IRON OR STEEL GRILLS OF AT LEAST ONE-EIGHT-INCH MATERIAL WITH A MAXIMUM TWO-INCH MESH AND SECURELY FASTENED;
B. IF THE BARRIER IS ON THE OUTSIDE, IT SHALL BE SECURED WITH BOLTS WHICH ARE NONREMOVABLE FROM THE EXTERIOR;
C. SUBSECTINS A.1 AND A.2. MUST NOT INTERFERE WITH VENTING REQUIREMENTS CREATING A POTENTIALLY HAZARDOUS CONDITION TO HEALTH AND SAFETY OR CONFLICT WITH THE PROVISIONS OF THE CALIFORNIA BUILDING CODE.

(ORD. 1861 N.S. / 11 (PART), 2007: ORD. 491 N.S. (PART), 1979)
(ORD. NO. 2000 N.S., / 10, 1-26-2011; ORD. NO 2095 N.S., / 2, 11-20-2013)

15.40.300 - LADDERS.

ANY LADDER, EXCLUDING FIRE ESCAPES, LOCATED ON THE EXTERIOR OF ANY BUILDING WHICH COULD PROVIDE ACCESS TO THE ROOF SHALL BE NOT LESS THAN TEN FEET FROM ANY ACCESSIBLE AREA.

(ORD. 1861 N.S. / 11 (PART), 2007: ORD. 491 N.S. (PART), 1979)
(ORD. NO 2095 N.S., / 2, 11-20-2013)

15.40.310 - OPEN PARKING LOTS.

OPEN PARKING LOTS AND ACCESS THERETO, FOR THE USE OF THE GENERAL PUBLIC, SHALL BE PROVIDED WITH A MAINTAINED AVERAGE OF TWO FOOT-CANDLES AND A MINIMUM OF FIVE-TENTHS FOOT-CANDLES MAINTAINED LIGHTING ON THE PARKING SURFACE FROM DUSK UNTIL THE BEGINNING OF BUSINESS EVERY OPERATING DAY.

(ORD. 1861 N.S. / 11 (PART), 2007: ORD. 491 N.S. (PART), 1979)
(ORD. NO. 2095 N.S., / 2, 11-20-2013; ORD. NO. 2307 N.S., / 7, 11-6-2019)

THESE DRAWINGS ARE THE PROPERTY OF OSITO HOLDINGS, LLC AND ARE INTENDED FOR USE SOLELY ON THE PROJECT TITLED HEREON. THESE DRAWINGS AS PROTECTED UNDER COPYRIGHT LAWS ARE NOT TO BE REPRODUCED IN WHOLE OR PART IN ANY MANNER WITHOUT THE EXPRESSED WRITTEN CONSENT OF THE DESIGNER. USE OF THESE DRAWINGS IS LIMITED TO THE SITE INTENDED AND THEIR USE AT ANY OTHER SITE, OR ON OTHER PROJECTS IS PROHIBITED EXCEPT BY PRIOR WRITTEN CONSENT OF THE DESIGNER. ALL REPRODUCTINS OF THESE DRAWINGS, IN WHOLE OR PART, REMAIN UNDER THE OWNERSHIP OF THE DESIGNER AND SHALL BE RETURNED UPON COMPLETION OF THE PROJECT OR UPON REQUEST OF THE DESIGNER.

COPYRIGHT (C) 2020

OWNER / DEVELOPER:
OSITO HOLDINGS, LLC
P.O. BOX 2827
MESA, AZ 85214
(480) 646 6323

PROJECT:
TENNANT SQUARE
215 TENNANT AVENUE
MORGAN HILL, CA.
COUNTY OF
SANTA CLARA

DRAWING:
CONDITIONS OF APPROVAL & CITY OF MORGAN HILL BUILDING SECURITY

LICENSED ARCHITECT
ZUISHUANG CHEN
NO. C-28156
REN. 5/31/25
STATE OF CALIFORNIA

REVISIONS:
1. 02.20.2023 PLAN CHECK RESPONSE
2. 02.09.2024 PLAN CHECK RESPONSE

DATE: JUNE 03, 2024
SCALE: AS NOTED
DRAWN BY: G.E.MOORE
PROJ. MGR. G.E.MOORE
PROJECT FILE: 0.20-TENNANT
DRAWING: COA.3

BUILDING SECURITY ARTICLE I - GENERAL PROVISIONS AND ADMINISTRATION △2

15.40.320 - ALTERNATIVES.

NOTHING CONTAINED IN THIS ARTICLE SHALL BE DEEMED TO PROHIBIT THE USE OF ALTERNATE MATERIALS, SECONDARY LOCK DEVICES OR MEASURES WHEN SUCH ALTERNATE PROVISIONS ARE DEEMED BY THE BUILDING OFFICIAL AS PROVIDING EQUIVALENT SECURITY BASED ON THE RECOMMENDATIONS OF THE CRIME PREVENTION UNIT OF THE POLICE DEPARTMENT.

(ORD. 1861 N.S. / 11 [PART], 2007: ORD. 491 N.S. [PART], 1979)
(ORD. NO. 2085 N.S., / 2, 11-20-2013)

ARTICLE IV - HOTELS, MOTELS AND MULTIPLE DWELLINGS.

15.40.330 - APPLICABILITY.

MINIMUM STANDARDS FOR DOORS, WINDOWS, GARAGE DOORS, ADDRESS NUMBERS, OPEN PARKING LOTS AND LIGHTING FOR HOTELS, MOTELS AND MULTIFAMILY DWELLINGS AE AS SET OUT IN SECTIONS 15.40.340 THROUGH 15.40.430.

(ORD. 1861 N.S. / 11 [PART], 2007: ORD. 491 N.S. [PART], 1979)
(ORD. NO. 2085 N.S., / 2, 11-20-2013)

15.40.340 - ENTRANCE DOORS TO INDIVIDUAL UNITS.

A. ALL WOOD DOORS SHALL BE SOLID CORE WIT A MINIMUM THICKNESS OF ONE AND THREE-FOURTHS INCHES AS PER STANDARDS SET FORTH IN THE CALIFORNIA BUILDING CODE.

B. ALL ENTRANCE DOORS TO INDIVIDUAL UNITS SHALL HAVE DEAD BOLT LOCKS IN ADDITION TO DEAD LOCKING LATCHES. THE LOCKS SHALL BE SO CONSTRUCTED THAT BOTH THE DEAD BOLT AND DEAD LOCKING LATCH CAN BE RETRACTED BY A SINGLE ACTIN OF THE INSIDE DOORKNOB. ALTERNATE DEVICES EQUALLY RESISTANT TO ILLEGAL ENTRY MAY BE SUBSTITUTED SUBJECT TO PRIOR APPROVAL OF THE BUILDING OFFICIAL.

C. DOORS SWINGING OUT SHALL HAVE RABBETED JAMBS.

(ORD. 1861 N.S. / 11 [PART], 2007: ORD. 491 N.S. [PART], 1979)
(ORD. NO. 2085 N.S., / 2, 11-20-2013)

15.40.350 - EXTERIOR DOORS - MULTIPLE DWELLING BUILDING.

A. EXTERIOR DOORS AND DOORS LEADING FROM GARAGE AREAS INTO A MULTIPLE DWELLING BUILDING AND DOORS LEADING INTO STAIRWELLS BELOW THE SIXTH FLOOR LEVEL SHALL HAVE SELF-LOCKING DEVICES.

B. ON PAIRS OF DOORS, THE ACTIVE LEAF SHALL BE SECURED WITH THE TYPE OF LOCK REQUIRED FOR SINGLE DOORS. THE INACTIVE LEAF SHALL BE EQUIPPED WITH LEVER FLUSH EXTENSION BOLTS WITH A MINIMUM THROW OF THREE-FOURTHS INCH AT HEAD AND FOOT.

(ORD. 1861 N.S. / 11 [PART], 2007: ORD. 491 N.S. [PART], 1979)
(ORD. NO. 2085 N.S., / 2, 11-20-2013)

15.40.360 - SLIDING PATIO-TYPE DOORS.

SLIDING PATIO-TYPE DOORS OPENING ONTO PATIOS OR BALCONIES WHCIH ARE ACCESSIBLE FROM THE OUTSIDE:

A. IT WILL BE PERMISSIBLE FOR SINGLE SLIDING PATIO DOORS TO HAVE THE MOVABLE SECTION OF THE DOOR SLIDE ON THE OUTSIDE AS WELL AS THE INSIDE OF THE DOOR ALTHOUGH BOTH SHALL BE PROVIDED WITH PINS OR SLIDING DOOR LOCKS THAT WILL RENDER THE DOOR INCAPABLE OF BEING LIFTED OR SLID UPWARD. [DOORS SHALL COMPLY WITH TESTS AS SET FORTH IN SECTION 15.40.020.]

(ORD. 1861 N.S. / 11 [PART], 2007: ORD. 491 N.S. [PART], 1979)
(ORD. NO. 2085 N.S., / 2, 11-20-2013)

15.40.370 - WINDOWS - SECURITY REQUIRED WHEN.

A WINDOW, SKYLIGHT OR OTHER LIGHT FORMING A PART OF THE ENCLOSURE OF A DWELLING UNIT SHALL BE CONSTRUCTED, INSTALLED AND SECURED AS SET FORTH IN SECTION 15.40.380,
AND SIX FEET HORIZONTALLY FROM A STREET, HIGHWAY, YARD, COURT, PASSAGEWAY, CORRIDOR, BALCONY, PATIO, BREEZEWAY OR ANY PORTION OF THE BUILDING WHICH IS AVAILABLE FOR USE BY THE PUBLIC OR OTHER TENANTS OR SIMILAR AREA. A WINDOW ENCLOSING A PRIVATE GARAGE WITH AN INTERIOR OPENING LEASDING DIRECTLY TO A DWELLING UNIT SHALL ALSO COMPLY WITH SECTION 15.40.380.

(ORD. 1861 N.S. / 11 [PART], 2007: ORD. 491 N.S. [PART], 1979) WHEN SUCH WINDOW, SKYLIGHT OR LIGHT IS NOT MORE THAN TWELVE FEET VERTICALLY
(ORD. NO. 2085 N.S., / 2, 11-20-2013)

15.40.380 - WINDOW PROTECTION.

A. WINDOWS SHALL BE SO CONSTRUCTED THAT WHEN THE WINDOW IS LOCKED IT CANNOT BE LIFTED FROM THE FRAME.

B. WINDOW LOCKING DEVICES SHALL BE CAPABLE OF WITHSTANDING FORCE OF THREE HUNDRED POUNDS APPLIED IN ANY DIRECTION. [SLIDING WINDOWS SHALL COMPLY WITH TESTS AS SET FORTH IN SECTION 15.40.020.]

C. LOUVERED WINDOWS SHALL NOT BE USED.

(ORD. 1861 N.S. / 11 [PART], 2007: ORD. 491 N.S. [PART], 1979)
(ORD. NO. 2085 N.S., / 2, 11-20-2013)

15.40.390 - GARAGE DOORS.

ALL GARAGE DOORS SHALL BE SECURED AS FOLLOWS:

A. OVERHEAD GARAGE DOORS SHALL NOT HAVE BOTTOM VENTS EXCEPT THOSE DOORS HAVING DOUBLE-LOUVERED OR SHIELDED VENTS OR APPROVED ALTERNATE DEVICES TO PROTECT THE LOCKING MECHANISM.

B. MANUALLY OPERATED GARAGE DOORS SHALL ABE PROVIDED WITH SLIDE BOLTS OR ANY OTHER LOCKING DEVICE THAT WILL PROHIBIT THE GARAGE DOOR FROM BEING FORCED OPEN FROM EITHER SIDE.

(ORD. 1861 N.S. / 11 [PART], 2007: ORD. 491 N.S. [PART], 1979)
(ORD. NO. 2085 N.S., / 2, 11-20-2013)

15.40.400 - OPEN PARKING LOTS.

OPEN PARKING LOTS AND CARPORTS SHALL BE PROVIDED WITH A MAINTAINED AVERAGE OF TWO FOOTCANDLES AND A MINIMUM OF FIVE-TENTHS FOOTCANDLES OF LIGHT ON THE PARKING SURFACE DURING THE HOURS OF DARKNESS. LIGHTING DEVICES SHALL BE PROTECTED BY VANDALISM-RESISTANT COVERS.

(ORD. 1861 N.S. / 11 [PART], 2007: ORD. 491 N.S. [PART], 1979)
(ORD. NO. 2085 N.S., / 2, 11-20-2013; ORD. NO. 2307 N.S., / 7, 11-6-2019)

15.40.410 - ADDRESS NUMBERS ON MULTIFAMILY DWELLINGS.

THERE SHALL BE POSITIONED AT THE MAIN ENTRANCE OF THE MULTIFAMILY DWELLING COMPLEX AN ILLUMINATED DIAGRAMMATIC REPRESENTATION OF THE COMPLEX WHICH SHOWS THE LOCATION OF THE VIEWER AND THE UNIT DESIGNATIONS WITHIN THE COMPLEX. IN ADDITION, EACH INDIVIDUAL UNIT WITHIN THE COMPLEX SHALL DISPLAY A PROMINENT IDENTIFICATION NUMBER, NOT LESS THAN FOUR INCHES IN HEIGHT, WHICH IS EASILY VISIBLE TO APPROACHING VEHICULAR AND/OR PEDESTRIAN TRAFFIC.

(ORD. 1861 N.S. / 11 [PART], 2007: ORD. 491 N.S. [PART], 1979)
(ORD. NO. 2085 N.S., / 2, 11-20-2013)

15.40.420 - LIGHTING IN MULTIFAMILY DWELLINGS.

AISLES, PASSAGEWAYS AND RECESSES RELATED TO AND WITHIN THE BUILDING COMPLEX SHALL BE ILLUMINATED WITH AN INTENSITY OF AT LEAST TWENTY-FIVE ONE-HUNDREDTHS (.25) FOOTCANDLES AT THE GROUND LEVEL DURING THE HOURS OF DARKNESS. LIGHTING DEVICES SHALL BE PROTECTED BY VANDALISM-RESISTANT COVERS.

(ORD. 1861 N.S. / 11 [PART], 2007: ORD. 491 N.S. [PART], 1979)
(ORD. NO. 2085 N.S., / 2, 11-20-2013)

15.40.430 - ALTERNATIVES.

NOTHING CONTAINED IN THIS ARTICLE SHALL BE DEEMED TO PROHIBIT THE USE OF ALTERNATE MATERIALS, SECONDARY LOCK DEVICES OR MEASURES WHEN SUCH ALTERNATE PROVISIONS ARE DEEMED BY THE BUILDING OFFICIAL AS PROVIDING EQUIVALENT SECURITY BASED ON THE RECOMMENDATIONS OF THE CRIME PREVENTION UNIT OF THE POLICE DEPARTMENT.

(ORD. 1861 N.S. / 11 [PART], 2007: ORD. 491 N.S. [PART], 1979)
(ORD. NO. 2085 N.S., / 2, 11-20-2013)

DISABILITIES SIGN ELEVATION △2 (THIS DETAIL IS NOT TO SCALE)

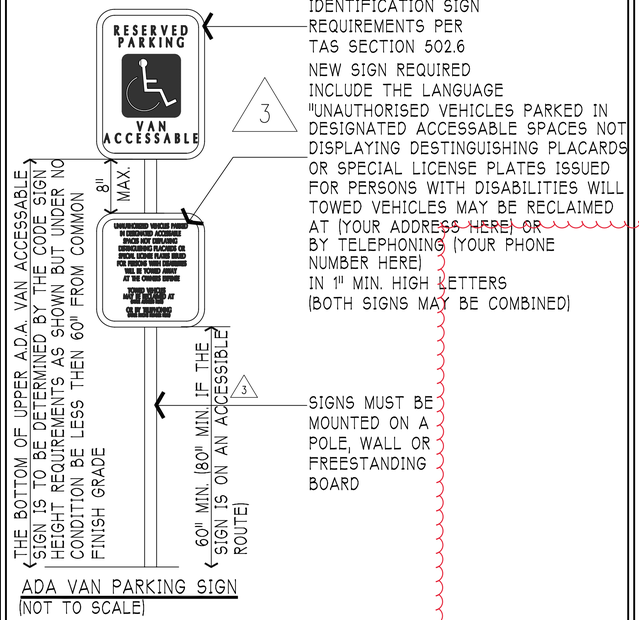

ADA VAN PARKING SIGN
(NOT TO SCALE)

PROPOSED A.D.A. PARKING STALL △3 (AS DESIGNED - PLEASE SEE SHEET AS.1 FOR STALL LOCATION)

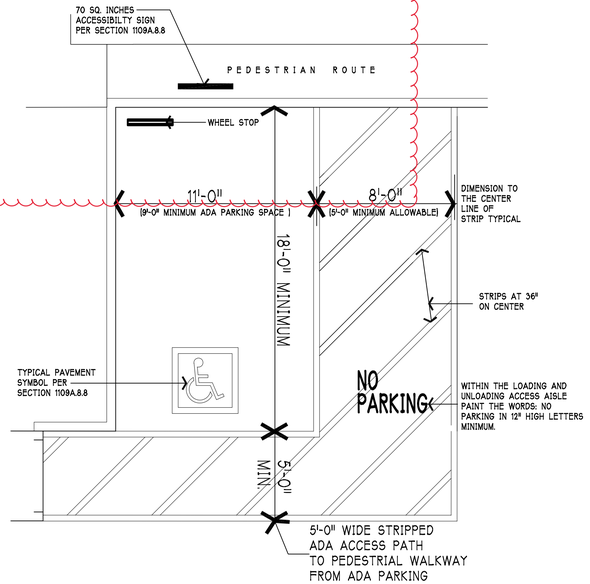

THESE DRAWINGS ARE THE PROPERTY OF OSITO HOLDINGS, LLC AND ARE INTENDED FOR USE SOLELY ON THE PROJECT TITLED HEREON. THESE DRAWINGS AS PROTECTED UNDER COPYRIGHT LAWS ARE NOT TO BE REPRODUCED IN WHOLE OR PART IN ANY MANNER WITHOUT THE EXPRESSED WRITTEN CONSENT OF THE DESIGNER. USE OF THESE DRAWINGS IS LIMITED TO THE SITE INTENDED AND THEIR USE AT ANY OTHER SITE, OR ON OTHER PROJECTS IS PROHIBITED EXCEPT BY PRIOR WRITTEN CONSENT OF THE DESIGNER. ALL REPRODUCTING OF THESE DRAWINGS, IN WHOLE OR PART, REMAIN UNDER THE OWNERSHIP OF THE DESIGNER AND SHALL BE RETURNED UPON COMPLETION OF THE PROJECT OR UPON REQUEST OF THE DESIGNER.

COPYRIGHT © 2020

OWNER / DEVELOPER:

OSITO HOLDINGS, LLC
P.O. BOX 2827
MESA, AZ 85214
(480) 646 6323

PROJECT:

TENNANT SQUARE
215 TENNANT AVENUE
MORGAN HILL, CA.
COUNTY OF
SANTA CLARA

DRAWING:

CITY OF MORGAN HILL BUILDING SECURITY

LICENSED ARCHITECT
BRIAN C. COBB
REN. 5/31/25
BUILDING OFFICIAL
STATE OF CALIFORNIA

REVISIONS:
△1 02.20.2023 PLAN CHECK RESPONSE
△2 02.09.2024 PLAN CHECK RESPONSE
△3 10.12.2024 PLAN CHECK RESPONSE

DATE: NOVEMBER 1, 2024
SCALE: AS NOTED
DRAWN BY: G.E.MOORE
PROJ. MGR. G.E.MOORE
PROJECT FILE: 0.20-TENNANT
DRAWING: COA.4

NOISE ASSESSMENT STUDY

EDWARD L. PACK ASSOCIATES, INC.
1975 HAMILTON AVENUE
SUITE 26
MODESTO, CA 95125
Acoustical Consultants
TEL: 408-371-1195
MOB: 408-621-4886
www.packassociates.com

NOISE ASSESSMENT STUDY FOR THE PLANNED

"TENNANT SQUARE"

MULTI-FAMILY DEVELOPMENT

TENNANT AVENUE, MORGAN HILL

Prepared for
Osito Holdings, LLC

Prepared by
Jeffrey K. Pack

February 17, 2023
Project No. 55-004

ACOUSTICAL SOCIETY OF AMERICA   NATIONAL COUNCIL OF ACOUSTICAL CONSULTANTS

TABLE OF CONTENTS

I. Executive Summary 1
II. Background Information on Acoustics 2
III. Noise Standards, Goals & Policies
A. City of Morgan Hill General Plan 6
B. State of California Code of Regulations, Title 24 6
IV. Acoustical Setting
A. Site, Traffic and Project Descriptions 7
V. Existing Noise Environment
A. Existing Noise Levels 9
B. Future Noise Levels 10
VI. Noise Impacts to the Project
A. Exterior Noise Exposures 12
B. Interior Noise Exposures 13
VII. Project-Generated Noise
A. Project Traffic 13
B. Construction Noise and Vibration 14
VIII. Recommendations
A. Traffic Noise Impacts to the Project - Interior 18
IX. Construction Noise and Vibration Reduction Measures 21
X. Conclusions 24
APPENDIX A
References A-1
APPENDIX B
1. Noise Standards B-1
2. Terminology B-8
3. Instrumentation B-10
4. Ventilation Requirements B-10
5. General Building Shell Controls B-11
APPENDIX C
Noise Measurement Data and Calculation Tables C-1

I. **Executive Summary**

This report presents the results of a noise assessment study for the planned multi-family development along Tennant Avenue in Morgan Hill, as shown on the Development Plan, Ref. (a). The plans indicate that the project will have 16 single-family detached homes.

The noise exposure impacts to the project were evaluated against the standards of the City of Morgan Hill General Plan Safety, Services and Infrastructure Element Noise Chapter, Ref. (b), hereinafter referred to as the "Noise Element", and the State of California Code of Regulations, Title 24, Ref. (c).

An analysis of the on-site noise measurements indicates that the noise environment is created primarily by traffic sources on Tennant Avenue.

Noise from operations at the adjacent Aamco Transmission facility does not add to the overall noise environment. The service bays operate with the doors in both the open and closed positions. Typical auto repair noises were audible, but were lower in level than traffic noise.

There was very little activity at the Mantacitas Precision machine shop. During four site visits, relatively few vehicles entered and exited the site and a few people were observed having a conversation in the parking lot. There was no noticeable noise emanating from the building.

The results of this study reveal that exterior noise exposure excesses will occur at the four lots closest to Tennant Avenue. The interior noise exposures of the project will exceed the limits of the standards of the City of Morgan Hill Noise Element and Title 24. The interior maximum noise levels will also exceed the limits of the Noise Element. Noise mitigation measures for certain project interior spaces will be required.

II. **Background Information on Acoustics**

Noise is defined as unwanted sound. Airborne sound is a rapid fluctuation of air pressure above and below atmospheric pressure. Sound levels are usually measured and expressed in decibels (dB) with 0 dB corresponding roughly to the threshold of hearing.

Most of the sounds which we hear in our normal environment do not consist of a single frequency, but rather a broad range of frequencies. As humans do not have perfect hearing, environmental sound measuring instruments have an electrical filter built in so that the instrument's detector replicates human hearing. This filter is called the "A-weighting" network and filters out low and very high frequencies. All environmental noise is reported in terms of A-weighted decibels, notated as "dBA". All sound levels used in this report are A-weighted unless otherwise noted. Table I on page 3 shows the typical human response and noise sources for A-weighted noise levels.

Although the A-weighted noise level may adequately indicate the level of noise at any instant in time, community noise levels vary continuously. Most environmental noise includes a mixture of noise from distant sources that create a relatively steady background noise from which no particular source is identifiable. To describe the time-varying character of environmental noise, the statistical noise descriptors, L_1, L_{10}, L_{50} and L_{90} are often used. They are the A-weighted noise levels exceeded for 1%, 10%, 50% and 90% of a stated time period. The continuous equivalent-energy level (L_{eq}) is that level of a steady state noise which has the same sound energy as a time-varying noise. It is often considered the average noise level and is used to calculate the Day-Night Levels (DNL) and the Community Noise Equivalent Level (CNEL) described below.

TABLE I

The A-Weighted Decibel Scale, Human Response, and Common Noise Sources

Noise Level, dBA	Human Response	Noise Source
120-150+	Painfully Loud	Sonic Boom (140 dBA)
100-120	Physical Discomfort	Motorcycle at 20 ft. (110 dBA) Nightclub Music (105 dBA)
70-100	Annoying	Diesel Pump at 100 ft. (95 dBA) Freight Train at 50 ft. (90 dBA) Food Blender (90 dBA) Jet Plane at 1000 ft. (85 dBA) Freeway at 50 ft. (80 dBA) Alarm Clock (80 dBA)
50-70	Intrusive	Average Traffic at 100 ft. (70 dBA) Pass. Car, 30 mph @ 25 ft. (65 dBA) Vacuum Cleaner (60 dBA) Suburban Background (55 dBA)
0-50	Quiet	Normal Conversation (50 dBA) Light Traffic at 100 ft. (45 dBA) Refrigerator (45 dBA) Desktop Computer (40 dBA) Whispering (35 dBA) Leaves Rustling (20 dBA) Threshold of Hearing (0 dBA)

In determining the daily level of environmental noise, it is important to account for the difference in response of people to daytime and nighttime noises. During the nighttime, exterior background noises are generally lower than the daytime levels. However, most household noise also decreases at night and exterior noise becomes very noticeable. Further, most people sleep at night and are very sensitive to noise intrusion. To account for human sensitivity to nighttime noise levels, the Day-Night Level (DNL) noise descriptor was developed. The DNL is also notated as L_{dn}. Either is acceptable, however, DNL is more popular worldwide. The DNL divides the 24-hour day into the daytime period of 7:00 a.m. to 10:00 p.m. and the nighttime period of 10:00 p.m. to 7:00 a.m. The nighttime noise levels are penalized by 10 dB to account for the greater sensitivity to noise at night. The Community Noise Equivalent Level (CNEL) is another 24-hour average which includes a 5 dB evening (7:00 p.m. - 10:00 p.m.) penalty and a 10 dB nighttime penalty. Both the DNL and the CNEL average the daytime, evening and nighttime noise levels over a 24-hour period to attain a single digit *noise exposure*. The proper notations for the Day-Night Level and the Community Noise Equivalent Level are dB DNL and dB CNEL, respectively, as they can only be calculated using A-weighted decibels. It is, therefore, considered redundant to notate dB(A) DNL or dB(A) CNEL.

The effects of noise on people can be listed in three general categories:

- subjective effects of annoyance, nuisance, dissatisfaction;
- interference with activities such as speech, sleep, learning, relaxing;
- physiological effects such as startling, hearing loss.

The levels associated with environmental noise, in almost every case, produce effects only in the first two categories. Workers in industrial plants, airports, etc., can experience noise in the last category. Unfortunately, there is, as yet, no completely satisfactory way to measure the subjective effects of noise, or of the corresponding reactions of annoyance and dissatisfaction. This is primarily due to the wide variation in individual thresholds of annoyance and differing individual past experiences with noise. Thus, an important way to determine a person's subjective reaction to a new noise is to compare it to the existing environment to which one has adapted, i.e., the "ambient". In general, the more a new noise exceeds the previously existing ambient noise level, the less acceptable the new noise will be judged by the receivers.

With regard to increases in A-weighted noise levels, the Environmental Protection Agency has determined the following relationships that will be helpful in understanding this report.

- Except in carefully controlled laboratory experiments, a change of 1 dB cannot be perceived.
- Outside of the laboratory, a 3 dB change is considered a just-perceptible difference.
- A change in level of at least 5 dB is required before any noticeable change in community response would be expected.
- A 10 dB change is subjectively heard as approximately a doubling in loudness, and would almost certainly cause an adverse change in community response.

The adding or subtracting of sound levels is not simply arithmetic. The sound levels, in decibels, must be converted to Bels, the anti-logs of which are then calculated. The manipulation is then performed (arithmetic addition or subtraction), the logarithm of the sum or difference is calculated. The final number is then multiplied by 10 to convert Bels to decibels. The formula for adding decibels is as follows:

$$\text{Sum} = 10\log(10^{SL/10} + 10^{SL/10})$$ where, SL is the Sound Level in decibels.

For example, 60 dB + 60 dB = 63 dB, and 60 dB + 50 dB = 60 dB. Two sound sources of the same level are barely noisier than just one of the sources by itself. When one source is 10 dB higher than the other, the less noisy source does not add to the noisier source.

III. **Noise Standards**

A. **City of Morgan Hill General Plan**

The noise exposures presented herein were evaluated against the standards of the City of Morgan Hill Noise Element, which utilizes the Day-Night Level (DNL) 24-hour descriptor to define acceptable noise exposures for various land uses. The standards specify a limit of 65 dB DNL for multi-family common areas. The exterior noise limits are not applied to small, limited use private areas, such as patios and balconies.

A limit of 45 dB DNL is specified for interior living spaces. In addition, the Noise Element specifies that when the exterior noise exposure at the building setback is greater than 60 dB DNL, the *maximum instantaneous* noise levels shall not exceed 50 dBA in bedrooms and 55 dBA in other living spaces. The exterior noise exposures at all lots of the project with the exception of the two lots closest to Tennant Avenue are below the 60 dB DNL criterion under existing and projected future conditions. Thus, the interior maximum noise level limits are applicable only to these two homes.

B. **The State of California Code of Regulations, Title 24**

The Title 24 standards also use the DNL descriptor (to conform to local jurisdictional descriptors) and specify a limit of 45 dB DNL or lower for interior living spaces from exterior noise sources.

The Title 24 standards also specify minimum sound insulation ratings for common partitions separating different dwelling units and dwelling units from interior common spaces. The standards specify that common walls and floor/ceiling assemblies must have a design Sound Transmission Class (STC) rating of 50 or higher. In addition, common floor/ceiling assemblies must achieve a minimum Impact Insulation Class (IIC) rating of 50 or higher. As design details for the interior partitions of the project were not available at the time of this study, the evaluation of the interior partitions will be provided in a subsequent study.

IV. **Acoustical Setting**

A. **Site, Traffic and Project Descriptions**

The planned project site is located along Tennant Avenue between Vineyard Avenue and Church Street in Morgan Hill. The vacant site is relatively flat and at-grade with the surrounding land uses and roadway. Surrounding land uses include an Aamco Transmission and Matancitas Precision Machine Shop facilities adjacent to the east, attached and detached single-family residential adjacent to the north, multi-family residential adjacent to the west and the Tennant Station shopping center across Tennant Avenue to the south. A 6 ft. high masonry barrier in on the easterly property line extending from the setback of the Aamco Transmission building to the north property line.

The primary source of noise at the site is traffic on Tennant Avenue, which carries an existing (2020) Average Daily Traffic (ADT) volume of 10,960 vehicles, Ref. (d).

The Aamco Transmission facility is open from 8:00 AM – 5:00 PM Monday-Friday and 8:00 AM – 12:00 PM Saturday.

Matancitas Precision machine shop 8:00 AM – 5:00 PM Monday-Friday.

The planned project includes construction of 14 two-story multi-family homes. The home will be situated in two buildings in a north-south orientation. Ingress and egress to the site will be by way of a private street off of Tennant. The Development Plan is shown on Figure 1 on page 8.

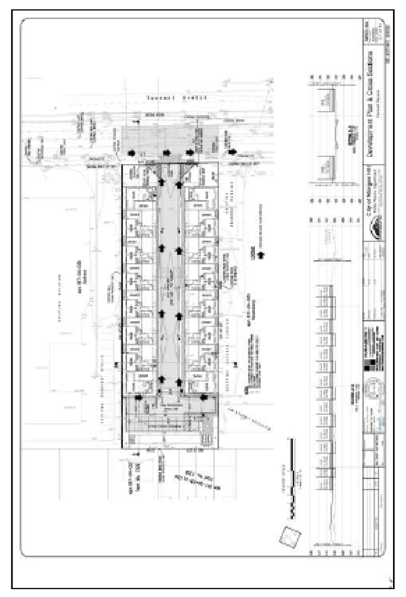

FIGURE 1 – Site Plan

V. **Existing Noise Environment**

A. **Existing Noise Levels**

To determine the existing noise environment at the site, continuous recordings of the sound levels were made at two locations. Location 1 was 85 ft. from the centerline of Tennant Avenue. This location corresponds to the planned minimum setback of the buildings from Tennant Avenue. Location 2 was along the east property line directly across the driveway between the first and second repair bays at the Aamco Transmission facility, 41 ft. from the repair bay doorway. The measurement locations are shown on Figure 2, below. The noise level measurements at were made on January 26-27, 2023 at Location 1 and February 13, 2023 at Location 2. The measurements were made for a continuous period of 24 hours at Location 1 and for 8 hours at Location 2 (operational period of Aamco Transmissions) included measurements during the daytime and nighttime periods of the DNL index.

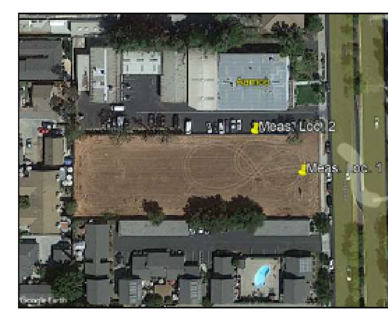

FIGURE 2 – Noise Measurement Location

The sound levels were recorded and processed using a Larson-Davis Model LxT Precision Integrating Sound Level Meter at both locations. The sound level meter at location 2 was placed on a mast of a height of 8 ft. where there was a direct view over the property line barrier to the service bays. The meter yields, by direct readout, a series of descriptors of the sound levels versus time, which include the L_1, L_{10}, L_{50}, and L_{90}, i.e., those levels that are exceeded 1%, 10%, 50%, and 90% of the time. The meter also yields the maximum and minimum levels, and the continuous equivalent-energy levels (L_{eq}), which are used to calculate the DNL. The measured L_{eq}'s are shown in the data tables in Appendix C.

The L_{eq}'s at measurement Location 1, 85 ft. from the centerline of Tennant Avenue, ranged from 55.5 to 62.2 dBA during the daytime and from 48.3 to 57.8 dBA at night.

The L_{eq}'s at measurement Location 2, 179 ft. from the centerline of Tennant Avenue and 41 ft. from the Aamco Transmission service bays, ranged from 51.6 to 57.8 dBA during the operational hours of 8:00 AM to 5:00 PM. The noise levels at Location 2 included service bay activities with the service bay doors both open and closed.

B. **Future Noise Levels**

Future traffic volume data for Tennant Avenue were provided in a Traffic Impact Analysis for the Lillian Commons Medical Campus, Ref. (d). The predicted 2035 Buildout w/Project traffic volume, which represents a worst-case scenario, revealed an ADT volume of 12,700 vehicles (10 times the AM peak hour). As the existing traffic volume is 10,960 vehicles ADT, the future increase yields a 1 decibel increase in the traffic noise levels. Traffic noise changes are calculated using the formula:

$$\Delta dB = 10\log_{10}(V_2/V_1)$$
$$0.64 \text{ dB} = 10\log_{10}(12{,}700/10{,}960)$$

Table II, below, provides the measured maximum noise levels at Location 1 along Tennant Avenue and the calculated interior maximum noise levels. Note that maximum noise levels are not affected by vehicle volume.

TABLE II
Maximum Noise Levels, dBA Lmax

TIME	Exterior	Interior
Daytime		
7:00 AM	77.1	52.1
8:00 AM	81.6	56.6
9:00 AM	81.5	56.5
10:00 AM	77.3	52.3
11:00 AM	81.6	56.6
12:00 PM	85.8	60.8
1:00 PM	91.1	66.1
2:00 PM	94.3	69.3
3:00 PM	76.0	51.0
4:00 PM	88.3	63.3
5:00 PM	79.6	54.6
6:00 PM	82.5	57.5
7:00 PM	81.1	56.1
8:00 PM	86.2	61.2
9:00 PM	72.3	47.3
Average =	82.4	57.4
Nighttime		
10:00 PM	75.6	50.6
11:00 PM	71.9	46.9
12:00 AM	74.8	49.8
1:00 AM	66.5	41.5
2:00 AM	73.2	48.2
3:00 AM	75.1	50.1
4:00 AM	75.5	50.5
5:00 AM	77.7	52.7
6:00 AM	73.9	48.9
Average =	73.8	48.8

Because the maximum noise level, by definition is a 1 second noise value, apply noise control measures to reduce a very short duration and often spurious noise event is onerous. Thus, this study averages the noise hourly maximum noise levels during the daytime and nighttime periods. The 55 dBA L_{max} interior noise limit for living spaces is applied during daytime hours and the 50 dBA L_{max} interior noise limit for bedrooms is applied during nighttime hours.

As shown in Table II, the average daytime maximum noise level is 57.4 dBA and is 2 dB in excess of the 55 dBA limit. The average nighttime maximum noise level is 48.8 dBA and is within the 50 dBA limit. Noise control measures for the noise impacted interior spaces will be required.

VI. **Noise Impacts to the Project**

A. **Exterior Noise Exposures**

To determine the noise impacts to the project, the DNL for the survey Location 1 was calculated by decibel averaging of the L_{eq}'s as they apply to the daily time periods of the DNL index. A 10 decibel nighttime weighting factor was applied and the DNL was calculated using the formula shown in Appendix B. The measured L_{eq}'s and DNL calculations are shown in the data table in Appendix C. Adjustments were made to the measured noise levels to account for the variations in setback distances from the measurement locations using methods established by the Highway Research Board, Ref. (e).

The results of the calculations reveal that the exterior noise exposure at measurement Location 1 and minimum planned building setback from Tennant Avenue, 85 ft. from the centerline, is 62 dB DNL. Under future traffic conditions, the noise exposure is expected to increase to 63 dB DNL. Thus, the noise exposures will be within the 65 dB DNL limit of the City of Morgan Hill Noise Element standards for multi-family land use.

The noise levels at measurement Location 2 were produced primarily from traffic on Tennant Avenue. Noise from Aamco Transmissions was intermittent and did not significantly affect the traffic noise levels at this location.

As the noise exposures at the two lots closest to Tennant Avenue exceed 60 dB DNL, the interior maximum noise level limits are applicable.

The future 60 dB DNL noise contour will be 135 ft. from the centerline of Tennant Avenue.

As the exterior noise exposures are within the 65 dB DNL limit of the standards, noise mitigation measures for the exterior spaces will not be required.

B. **Interior Noise Exposures**

To determine the interior noise exposures in project living spaces, a 15 dB reduction was applied to the exterior noise exposures at the building setbacks to represent the attenuation provided by a typical building shell under an *annual-average* condition. The annual-average condition assumes that the windows are kept open up to 50% of the time for natural ventilation.

The interior noise exposures in the most impacted living spaces of the project will be up to 47 and 48 dB DNL under existing and future traffic conditions, respectively. Thus, the interior noise exposures will be up to 3 dB in excess of the 45 dB DNL limit of the City of Morgan Hill Noise Element and Title 24 standards. Noise control measures for certain project interiors will be required. The recommended measures are provided in Section VIII of this report. Additionally, general construction measures to ensure that the building shell adequately reduces exterior noise are provided in Appendix B.

VII. **Project-Generated Noise**

A. **Project Traffic**

In order for the project traffic to be significant, it must add 3 decibels to the existing noise environment where the existing ambient is 60 dB DNL or higher. To increase the noise environment by 3 decibels, the project traffic volume must double the existing traffic volume. As the existing traffic volume on Tennant Avenue is 10,960 7,280 vehicles ADT, the project must add over 10,000 vehicles per day on Tennant Avenue in order for the project to result in a significant noise impact. This level of project traffic is unlikely.

B. **Construction Noise and Vibration**

Short-term noise impacts may be created during construction of the project. Construction equipment noise levels range from 70 to 83 dBA at a 110 ft. distance from the source, and has a potential to disturb the residences adjacent to the north and west.

A table of construction equipment (mostly earthwork equipment, which is usually the noisiest, taken from the Federal Transit Administration Noise and Vibration Impact Assessment, Ref. (f), is provided on page 15. The noise levels for each item of equipment, not all of which will be used on this project, are reported for a standard distance of 50 ft.

Since construction is carried out in several reasonably discrete phases, each will have its own mix of equipment and consequently, its own noise characteristics. Generally, the site preparation requires the use of heavy equipment such as bulldozers, loaders, graders, concrete trucks and diesel trucks. Construction of the building includes haul trucks, cranes, forklifts, pumps, air compressors and powered and manual hand tools (saws, nail guns, sprayers). Once the shell of the building is completed with the windows installed, much of the construction noise will be contained inside the building.

The City of Morgan Hill noise standards do not limit construction noise levels. Rather, limits are placed on hours of operation. These limits are outlined in Section IX.

Table 7-1 Construction Equipment Noise Emission Levels *

Equipment	Typical Noise Level 50 ft. from Source, dBA
Air Compressor	80
Backhoe	80
Ballast Equalizer	82
Ballast Tamper	83
Compactor	82
Concrete Mixer	85
Concrete Pump	82
Concrete Vibrator	76
Crane, Derrick	88
Crane, Mobile	83
Dozer	85
Generator	82
Grader	85
Impact Wrench	85
Jack Hammer	88
Loader	80
Paver	85
Pile-driver (Impact)	101
Pile-driver (Sonic)	95
Pneumatic Tool	85
Pump	77
Rail Saw	90
Rock Drill	95
Roller	85
Saw	76
Scarifier	83
Scraper	85
Shovel	82
Spike Driver	77
Tie Cutter	84
Tie Handler	80
Tie Inserter	85
Truck	84

**This Table is copied from the FTA Transit Noise and Vibration Impact Assessment Manual, pg. 176.

Construction activities can also produce varying amounts of ground-borne vibration, which depend on the type of equipment used and various methods. Vibration is produced by the equipment operation and the vibrational waves travel through the ground/soil that diminish over distance. It is rare that construction vibration is intense enough to cause damage to existing structures.

Ground-borne vibration is typically reported in terms of "peak particle velocity" or PPV, and sometimes reported in terms of decibels of vibration, notated as VdB, which is a level of vibration (L_v). The use of PPV is more common for construction equipment and methods.

Table VII, below, provides building damage criteria from construction vibration established by the Federal Transit Administration.

TABLE III
Construction Vibration Damage Criteria

Building Category	PPV (in/sec)	Approx. L_v (VdB)
I. Reinforced-concrete, steel or timber (no plaster)	0.50	102
II. Engineered concrete and masonry (no plaster)	0.30	98
III. Non-engineered timber and masonry buildings	0.20	94
IV. Buildings extremely susceptible to vibration damage	0.12	90

** RMS velocity in decibels (VdB) re: 1 micro-inch/second

The Aamco Transmission and Mantancitas Precision buildings are reinforced concrete structures. The vibration limit for these buildings is 0.50 in./sec. The residential structures to the north and west are standard wood framed residences with a vibration limit of 0.20 in./sec.

Table IV on page 17 provides a ground-borne vibration analysis for construction of the project. As shown in the Table, vibration level excesses will occur is heavy equipment is used within a few feet of the west property line immediately adjacent to the neighboring car ports. Measures to control excessive vibration are provided in Section IX.

TABLE IV
Construction Equipment Vibration Levels, in/sec PPV

Dist to Comm. To East, ft.: 38
Dist. to Res. To North, ft.: 16
Dist. to Res. To West, ft.: 1

EQUIPMENT d =	Reference Vibration at d, ft. 25	Vibration Level @ Comm. To East	Dist for 0.5 PPV limit	Vibration Level @ Res. To North	Dist for 0.2 PPV limit	Vibration Level @ Res. To West	Dist for 0.2 PPV limit
Excavator	0.089	0.0	15	0.2	15	11.1	15
Hoe Ram	0.089	0.0	15	0.2	15	28.5	15
Large Bulldozer	0.089	0.0	15	0.2	15	28.5	15
Loaded Trucks	0.076	0.0	13	0.1	13	25.6	13
Jackhammer	0.035	0.0	8	0.1	8	15.3	8
Small Bulldozer	0.003	0.0	2	0.0	2	3.0	2
Backhoe	0.088	0.0	14	0.2	14	28.2	14
Compactor	0.240	0.1	28	0.5	28	55.1	28
Concrete Mixer	0.080	0.0	14	0.2	14	26.5	14
Concrete Pump	0.080	0.0	14	0.2	14	26.5	14
Crane	0.008	0.0	3	0.0	3	5.7	3
Dump Truck	0.080	0.0	14	0.2	14	26.5	14
Front End Loader	0.088	0.0	14	0.2	14	28.2	14
Grader	0.088	0.0	14	0.2	14	28.2	14
Hydra Break Ram*	0.040	0.0	9	0.1	9	16.7	9
Soil Sampling Rig	0.088	0.0	14	0.2	14	28.2	14
Paver	0.080	0.0	14	0.2	14	26.5	14
Pickup Truck	0.080	0.0	14	0.2	14	26.5	14
Slurry Trenching	0.016	0.0	5	0.0	5	9.1	5
Tractor	0.080	0.0	14	0.2	14	26.5	14
Vibratory Roller (lge)	0.477	0.3	45	0.9	45	87.2	45
Vibratory Roller (sm)	0.176	0.1	23	0.3	23	44.8	23
Clam Shovel*	0.208	0.1	26	0.4	26	50.1	26
Rock Drill	0.088	0.0	14	0.2	14	28.2	14

* Transient vibration levels

VIII. **Recommendations**

A. **Traffic Noise Impacts to the Project - Interior**

To achieve compliance with the 45 dB DNL and 55 dBA L_{max} limits of the City of Morgan Hill Noise Element and Title 24, the following window and door controls will be required. In addition, general building shell controls are also recommended, as described in Appendix B.

- Maintained closed at all times all windows and glass doors of living spaces with a direct or side view of Tennant Avenue and within 135 ft. of the centerline of the road. Install windows and glass doors rated minimum Sound Transmission Class (STC) 31 at these living spaces.
- The project entry doors within 135 ft. of the centerline of Tennant Avenue and with a direct or side view of the road shall be solid core wood or steel insulated doors with full perimeter acoustical seals, including the threshold. .
- Provide some type of mechanical ventilation for living spaces with the closed window or glass door condition.
- Please see Figure 3 for the locations of the noise impacted windows and doors and the recommend STC ratings.

When windows and glass doors are maintained closed at all times for noise control, some type of mechanical ventilation must be provided. The mechanical ventilation system shall conform to the requirements of the California Mechanical Code, as described in Appendix C, and shall not compromise the acoustical integrity of the building shell.

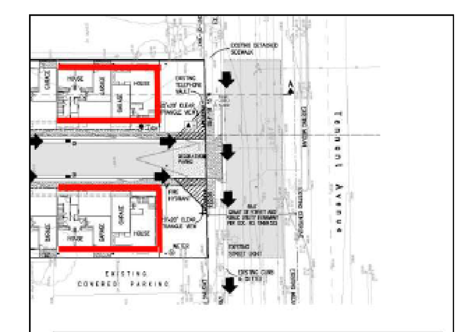

FIGURE 3

:Locations of the noise impacted building facades requiring the closed window and glass door condition. Install windows and glass doors rated mimimum Sound Transmission Class (STC) 31 at these locations. Provide some type of mechanical ventilation for these spaces.

STC 31

EDWARD L PACK ASSOCIATES, INC. 2/16/2023

City of Morgan Hill Public Works Department | Development Plan & Cross Sections Tennant Square

THESE DRAWINGS ARE THE PROPERTY OF OSITO HOLDINGS, LLC AND ARE INTENDED FOR USE SOLELY ON THE PROJECT TITLED HEREON. THESE DRAWINGS AS PROTECTED UNDER COPYRIGHT LAWS ARE NOT TO BE REPRODUCED IN WHOLE OR PART IN ANY MANNER WITHOUT THE EXPRESSED WRITTEN CONSENT OF THE DESIGNER. USE OF THESE DRAWINGS IS LIMITED TO THE SITE INTENDED AND THEIR USE AT ANY OTHER SITE, OR ON OTHER PROJECTS IS PROHIBITED EXCEPT BY PRIOR WRITTEN CONSENT OF THE DESIGNER. ALL REPRODUCTINS OF THESE DRAWINGS, IN WHOLE OR PART, REMAIN UNDER THE OWNERSHIP OF THE DESIGNER AND SHALL BE RETURNED UPON COMPLETION OF THE PROJECT OR UPON REQUEST OF THE DESIGNER.

COPYRIGHT © 2020

OWNER / DEVELOPER:

OSITO HOLDINGS, LLC
P.O. BOX 2827
MESA, AZ 85214
(480) 646 6323

PROJECT:

TENNANT SQUARE
215 TENNANT AVENUE
MORGAN HILL, CA.
COUNTY OF
SANTA CLARA

DRAWING:

NOISE ASSESSMENT STUDY

LICENSED ARCHITECT
ZUISHUANG CHEN
NO. C-28156
REN. 5/31/25
STATE OF CALIFORNIA

REVISIONS:
1 02.20.2023 PLAN CHECK RESPONSE

DATE: JANUARY 22, 2024
SCALE: AS NOTED
DRAWN BY: G.E.MOORE
PROJ. MGR. G.E.MOORE
PROJECT FILE: 0.20-TENNANT
DRAWING: NAS.1

NOISE ASSESSMENT STUDY

The windows and glass doors specified above to be maintained closes shall be operable as the requirement does not imply a fixed or inoperable condition. All other windows of the development may be kept open as desired with the exception of bathrooms that are an integral part of a living space and not separated by a closeable door, such as those common in master bedroom suites.

In addition, the windows and doors shall be installed in an acoustically-effective manner. To achieve an acoustically-effective window and door construction, the operable window panels must form an air-tight seal when in the closed position and the window frames must be caulked to the wall opening around their entire perimeter with a non-hardening caulking compound to prevent sound infiltration. Do not use expandable foam products.

Please be aware that many dual-pane and triple-pane window and glass door assemblies have inherent noise reduction problems in the traffic noise frequency spectrum due to resonance that occurs within the air space between the window lites, and the noise reduction capabilities vary from manufacturer to manufacturer. Therefore, the acoustical test report of all sound rated windows and glass doors should be reviewed by a qualified acoustician to ensure that the chosen windows will adequately reduce traffic noise to acceptable levels.

The implementation of the above recommended measures will reduce interior noise exposures to 45 dB DNL or lower and 55 dBA L_{max} or lower.

IX. Construction Noise and Vibration Reduction Measures

The following noise and vibration reduction measures provided in this section are intended as "best practices" methods and should be implemented as much as feasible in order to minimize potential noise conflicts with noise sensitive land uses.

Reduction of the demolition/construction phase noise at the site can be accomplished by using quiet or "new technology" equipment. The greatest potential for noise abatement of current equipment should be the quieting of exhaust noises by use of improved mufflers. It is recommended that all internal combustion engines used at the project site be equipped with a type of muffler recommended by the vehicle manufacturer. In addition, all equipment should be in good mechanical condition so as to minimize noise created by faulty or poorly maintained engine, drive-train and other components. Demolition and construction noise can also be mitigated by the following:

- Construction activities shall be limited to between 7:00 AM and 8 PM Monday through Friday, and 9:00 AM and 6:00 PM Saturdays per the City of Morgan Hill Noise Ordinance.
- No material deliveries are allowed on Sundays or Federal Holidays.
- Dirt berming and stockpiling materials whenever possible can also help reduce noise to sensitive receptor locations.
- Place long-term stationary equipment as far away from the noise sensitive areas as possible.
- Keep mobile equipment (haul trucks, concrete trucks, etc.) off of local streets near residences as much as possible.
- Earth Removal: Use scrapers as much as possible for earth removal, rather than the noisier loaders and hauling trucks.
- Backfilling: Use a backhoe for backfilling, as it is less costly and quieter than either dozers or loaders.

- Ground Preparation: Use a motor grader rather than a bulldozer for final grading. Wheeled heavy equipment is less noisy than track equipment. Utilize wheeled equipment rather than track equipment whenever possible. When working with the vibration distance limits of Table IV at the west property line, use small earth work equipment, such as skid steers (Bobcat type) and roller compactors rather than large diesel equipment and vibratory equipment.
- Building Construction: Powers saws should be shielded or enclosed where practical to decrease noise emissions. Nail guns should be used where possible as they are less noisy than manual hammering.
- Generators and Compressors: Use generators and compressor that are housed in acoustical enclosures rather than weather enclosures or none at all.
- It is recommended that all internal combustion engines used at the project site be equipped with a type of muffler recommended by the vehicle manufacturer.
- All equipment should be in good mechanical condition so as to minimize noise created by faulty or poorly maintained engines, drive-trains and other components. Worn, loose or unbalanced parts or components shall be maintained or replaced to minimize noise and vibration.
- Utilize temporary power service from the utility company in lieu of generators wherever possible.
- Keep vehicle paths graded smooth as rough roads and paths can cause significant noise and vibration from trucks (particularly empty trucks) rolling over rough surfaces. Loud bangs and ground-borne vibration can occur.

- Music shall not be audible off site.
- Use electrically powered tools rather than pneumatic tools whenever possible.
- For interior work, the windows of the interior spaces facing neighboring residences where work is being performed shall be kept closed while work is proceeding.
- Noise generating equipment indoors should be located within the building to utilize building elements as noise screens.
- Designate a noise complaint officer. The officer shall be available at all times during construction hours via both telephone and email. Signs shall be posted at site entries. A sample is shown below.

NOISE COMPLAINTS
FOR CONCERNS REGARDING CONSTRUCTION NOISE PLEASE CONTACT:
"CONSTRUCTION OFFICER"
Conoff@jobsite.com
OPERATIONS MANAGEMENT ENGINEER
CALL CENTER: (111) 111-1111

- Notify, in writing, all residents within 300 ft. of the site of construction. The notification shall contain the name, phone number and email address of the noise complaint officer. A flyer may be placed at the doors of the residences.
- A log of all complaints shall be maintained. The logs shall contain the name and address of the complainant, the date and time of the complaint, the nature/description of the noise source, a description of the remediation attempt or the reason remediation could not be attempted.

X. Conclusions

In conclusion, the exterior noise exposures will be within the limits of the City of Morgan Hill Noise Element standards. The interior noise exposures and noise levels in the planned homes will exceed the limits of the City of Morgan Hill Noise Element standards. Noise mitigation measures will be required.

This report presents the results of a noise assessment study for the planned "Tennant Square" multi-family development along Tennant Avenue in Morgan Hill. The study findings for existing conditions are based on field measurements and other data and are correct to the best of our knowledge. Future noise projections are based on estimates made by Edward L. Pack Associates, Inc. from information provided by the City of Morgan Hill. However, significant deviations in the predicted traffic volumes, motor vehicle technology, noise regulations or other future changes beyond our control may produce long-range noise results different from our estimates.

Report Prepared By:
EDWARD L. PACK ASSOC., INC.

Jeffrey K. Pack
President

APPENDIX A

References

(a) Development Plan and Cross Sections, Tennant Square, by Hanna & Brunetti, June 29, 2022

(b) City of Morgan Hill 2035 General Plan, Safety, Services and Infrastructure Element – Noise Chapter, Adopted July 27, 2016

(c) California Code of Regulations, Title 24, Volume 1, Part 2, Section 1206 "Sound Transmission", Subsection 1206.4 (Allowable Interior Noise Levels), Revised 2019

(d) "Lillian Commons Medical Campus Development Traffic Impact Analysis", by Hexagon Transportation Consultants, Inc., Hexagon Job No. 19RD10, June 19, 2020

(e) Highway Research Board, "Highway Noise – A Design Guide for Highway Engineers", Report 117, 1971

(f) United States Federal Transit Administration, Transit Noise and Vibration Impact Assessment Manual, Federal Transit Administration, Report No. 0123, by John A. Volpe National Transportation Systems Center, September 2018

APPENDIX B

Noise Standards, Terminology, Instrumentation, Ventilation Requirements and General Building Shell Controls.

1. Noise Standards

A. City of Morgan Hill Safety, Services and Infrastructure Element

The City of Morgan Hill General Plan 2035, adopted July 27, 2016, Safety, Services and Infrastructure Element contains a noise chapter that identifies goals and policies for noise limits with the City of Morgan Hill.

GOAL SSI-8 Prevention of noise from interfering with human activities or causing health problems.

Policy SSI-8.1
Exterior Noise Level Standards. Require new development projects to be designed and constructed to meet acceptable exterior noise level standards (see Table SSI-1), as follows:

Apply a maximum exterior noise level of 60dBA L_{dn} in residential areas where outdoor use is a major consideration (e.g., backyards in single-family housing developments and recreation areas in multi-family housing projects). Where the City determines that providing an L_{dn} of 60 dBA or lower cannot be achieved after the application of reasonable and feasible mitigation, an L_{dn} of 65 dBA maybe permitted.

Indoor noise levels should not exceed an L_{dn} of 45 dBA in new residential housing units.

Noise levels in new residential development exposed to an exterior L_{dn} 60 dBA or greater should be limited to a maximum instantaneous noise level (e.g., trucks on busy streets, train warning whistles) in bedrooms of 50 dBA. Maximum instantaneous noise levels in all other habitable rooms should not exceed 55dBA. The maximum outdoor noise level for new residences near the railroad shall be70 dBA L_{dn}, recognizing that train noise is characterized by relatively few loud events.

Policy SSI-8.2
Impact Evaluation. The impact of a proposed development project on existing land uses should be evaluated in terms of the potential for adverse community response based on significant increase in existing noise levels, regardless of compatibility guidelines.

Policy SSI-8.3
Commercial and Industrial Noise Level Standards. Evaluate interior noise levels in commercial and industrial structures on a case by case basis based on the use of the space.

Policy SSI-8.4
Office Noise Level Standards. Interior noise levels in office buildings should be maintained at 45 dBA L_{eq} (hourly average) or less, rather than 45 dBA L_{dn} (daily average).

Policy SSI-8.5
Traffic Noise Level Standards. Consider noise level increases resulting from traffic associated with new projects significant if: a) the noise level increase is 5 dBA L_{dn} or greater, with a future noise level of less than 60 dBA L_{dn}, or b) the noise level increase is 3 dBA L_{dn} or greater, with a future noise level of 60 dBA L_{dn} or greater.

Policy SSI-8.6
Stationary Noise Level Standards. Consider noise levels produced by stationary noise sources associated with new projects significant if they substantially exceed existing ambient noise levels.

Policy SSI-8.7
Other Noise Sources. Consider noise levels produced by other noise sources (such as ballfields) significant if an acoustical study demonstrates they would substantially exceed ambient noise levels.

Policy SSI-8.8
Screening. Use the Noise Contour map to screen projects to determine if acoustical studies shall be required.

Policy SSI-8.9
Site Planning and Design. Require attention to site planning and design techniques other than sound walls to reduce noise impacts, including: a) installing earth berms, b) increasing the distance between the noise source and the receiver; c) using non-sensitive structures such as parking lots, utility areas, and garages to shield noise

sensitive areas; d) orienting buildings to shield outdoor spaces from the noise source; and e) minimizing the noise at its source.

Action SSI-8.A
Noise Contour Map Updates. Assess and track noise levels when specific projects are proposed to determine the continued accuracy of the Noise Contour map. If necessary, based on these assessments, update the future Noise Contour map to reflect changed conditions.

Action SSI-8.B
Zoning Ordinance. Amend the Zoning Ordinance to reflect noise limits intended to protect noise sensitive land uses from intrusion by stationary noise sources.

GOAL SSI-9
Protection from noise associated with motor vehicles and railroad activity.

Policy SSI-9.1
Techniques to Reduce Traffic Noise. Use roadway design, traffic signalization, and other traffic planning techniques (such as limiting truck traffic in residential areas) to reduce noise caused by speed or acceleration of vehicles.

Policy SSI-9.2
Noise Barrier Dimensions. If noise barriers are deemed the only effective mitigation for development along major transportation corridors, require an acoustical analysis to determine necessary dimensions.

Policy SSI-9.3
Sound Wall Design. The maximum height of sound walls shall be eight feet. Residential projects adjacent to the freeway shall be designed to minimize sound wall height through location of a frontage road, use of two sound walls or other applicable measures. Sound wall design and location shall be coordinated for an entire project area and shall meet Caltrans noise attenuation criteria for a projected eight-lane freeway condition. If two sound walls are used, the first shall be located immediately adjacent to the freeway right-of-way and the second shall be located as necessary to meet Caltrans noise requirements for primary outdoor areas. The minimum rear yard setback to the second wall shall be 20 feet.

Policy SSI-9.4
Sound Barrier Vandalism. Ensure that sound barriers do not become targets for vandalism and prioritize clean-up if sound walls are vandalized.

Policy SSI-9.5
Noise Studies for Private Development. In order to prevent significant noise impacts on neighborhood residents which are related to roadway extensions or construction of new roadways, require completion of a detailed noise study during project-level design to quantify noise levels generated by projects such as the Murphy Avenue extension to Mission View Drive and the Walnut Grove Extension to Diana Avenue. The study limits should include noise sensitive land uses adjacent to the project alignment as well as those along existing segments that would be connected to new segments. A significant impact would be identified where traffic noise levels would exceed the "normally acceptable" noise level standard for residential land uses and/or where ambient noise levels would be substantially increased with the project. Project specific mitigation measures could include, but not be limited to, considering the location of the planned roadway alignment relative to existing receivers in the vicinity, evaluating the use of noise barriers to attenuate project-generated traffic noise, and/or evaluating the use of "quiet pavement" to minimize traffic noise levels at the source. Mitigation should be designed to reduce noise levels into compliance with "normally acceptable" levels for residential noise and land use compatibility.

Policy SSI-9.6
Earth Berms. Allow and encourage earth berms in new development projects as an alternative to sound walls if adequate space is available.

Policy SSI-9.7
Sound Barrier Design. Require non-earthen sound barriers to be landscaped, vegetated, or otherwise designed and/or obscured to improve aesthetics and discourage graffiti and other vandalism.

Action SSI-9.A
UPRR Madrone Parkway Crossing Noise Study. In order to prevent significant noise impacts on sensitive receptors and neighborhood residents which are related to an at-grade Madrone Parkway Crossing of the UPRR tracks, during project-level design, conduct a detailed noise study to calculate noise levels expected as a result of train warning whistles and warning bells that would be sounded, and to calculate the increase in ambient noise levels resulting from the project. The study limits should include noise sensitive land uses north and south of the at grade crossing as warning whistles would be expected up to one-quarter mile in each direction. A significant impact would be identified where (it is likely that these receivers are already exposed to noise levels above 60 dBA L_{dn}) where ambient noise levels would be substantially increased with the project. Project specific mitigation measures should include, but not be limited to, evaluating the use of noise barriers to attenuate the warning whistle/bell noise, residential sound insulation, utilizing wayside horns, and/or establishing a train whistle quiet zone per the Federal Railroad Administration's Final Rule on the Use of Locomotive Horns at Highway-Rail Grade Crossings. Mitigation should be designed to avoid a substantial permanent increase in noise.

B. Title 24 Noise Standards

2019 California Building Code, Volume 1, Part 2
SECTION 1206 – SOUND TRANSMISSION

1206.1 Scope. This section shall apply to common interior walls, partitions and floor/ceiling assemblies between adjacent dwelling units and sleeping units or between dwelling units and sleeping units and adjacent public areas such as halls, corridors, stairways or service areas.

1206.2 Air-borne sound. Walls, partitions and floor/ceiling assemblies separating dwelling units and sleeping units from each other or from public or service areas shall have a sound transmission class of not less than 50, or not less than 45 if field tested, for air-borne noise when tested in accordance to ASTM E-90. Alternatively, the sound transmission class of walls, partitions and floor-ceiling assemblies shall be established by engineering analysis based on a comparison of walls, partitions and floor-ceiling assemblies having sound transmission class ratings as determined by the test procedures in ASTM E90. Penetrations or openings in construction assemblies for piping; electrical devices; recessed cabinets; bathtubs; soffits; or heating, ventilating or exhaust ducts shall be sealed lined, insulated or otherwise treated to maintain the required ratings. The requirement shall not apply to entrance doors; however, such doors shall be tight fitting to the frame and sill.

1206.3 Structure-borne sound. Floor/ceiling assemblies between dwelling units and sleeping units or between a dwelling unit or sleeping unit and a public or service area with the structure shall have an impact insulation class rating of not less than 50, or not less than 45 if field tested, when tested in accordance with ASTM E-492. Alternatively, the impact insulation class of floor-ceiling assemblies shall be established by engineering analysis based on a comparison of floor-ceiling assemblies having impact insulation class ratings as determined by the test procedures in ASTM E492.

Exception: *Impact sound insulation is not required for floor/ceiling assemblies over non-habitable rooms or spaces not designed to be occupied, such as garages, mechanical rooms or storage areas.*

1206.4 Allowable interior noise levels. *Interior noise levels attributable to exterior sources shall not exceed 45 dB in any habitable room. The noise metric shall be either the day-night average sound level (Ldn) or the community noise equivalent level (CNEL), consistent with the noise element of the local general plan.*

1206.5 Acoustical control. *[BSC-CG] See California Green Building Standards code, Chapter 5, Division 5.5 for additional sound transmission requirements.*

2. Terminology

A. Statistical Noise Levels

Due to the fluctuating character of urban traffic noise, statistical procedures are needed to provide an adequate description of the environment. A series of statistical descriptors have been developed which represent the noise levels exceeded a given percentage of the time. These descriptors are obtained by direct readout of the Sound Level Meters and Noise Analyzers. Some of the statistical levels used to describe community noise are defined as follows:

L_1 - A noise level exceeded for 1% of the time.

L_{10} - A noise level exceeded for 10% of the time, considered to be an "intrusive" level.

L_{50} - The noise level exceeded 50% of the time representing an "average" sound level.

L_{90} - The noise level exceeded 90 % of the time, designated as a "background" noise level.

L_{eq} - The continuous equivalent-energy level is that level of a steady-state noise having the same sound energy as a given time-varying noise. The L_{eq} represents the decibel level of the time-averaged value of sound energy or sound pressure squared and is used to calculate the DNL and CNEL.

B. Day-Night Level (DNL)

Noise levels utilized in the standards are described in terms of the Day-Night Level (DNL). The DNL rating is determined by the cumulative noise exposures occurring over a 24-hour day in terms of A-Weighted sound energy. The 24-hour day is divided into two subperiods for the DNL index, i.e., the daytime period from 7:00 a.m. to 10:00 p.m., and the nighttime period from 10:00 p.m. to 7:00 a.m. A 10 dB weighting factor is applied (added) to the noise levels occurring during the nighttime period to account for the greater sensitivity of people to noise during these hours. The DNL is calculated from the measured L_{eq} in accordance with the following mathematical formula:

$$DNL = [[(10\log_{10}(10^{\Sigma Leq(7-10)})) \times 15] + [((10\log_{10}(10^{\Sigma Leq(10-7)}) + 10) \times 9]]/24$$

C. A-Weighted Sound Level

The decibel measure of the sound level utilizing the "A" weighted network of a sound level meter is referred to as "dBA". The "A" weighting is the accepted standard weighting system used when noise is measured and recorded for the purpose of determining total noise levels and conducting statistical analyses of the environment so that the output correlates well with the response of the human ear.

3. Instrumentation

The on-site field measurement data were acquired by the use of one or more of the precision acoustical instruments shown below. The acoustical instrumentation provides a direct readout of the L exceedance statistical levels including the equivalent-energy level (L_{eq}). Input to the meters was provided by a microphone extended to a height of 5 ft. above the ground. The meter conforms to ANSI S1.4 for Type 1 instruments and IEC 61672-1:2002 for Class 1 instruments. The "A" weighting network and the "Fast" response setting of the meter were used in conformance with the applicable ISO and IEC standards. All instrumentation was acoustically calibrated before and after field tests to assure accuracy.

Larson-Davis Model 812 Integrating Sound Level Meter
Larson-Davis LxT Precision Integrating Sound Level Meter
Larson-Davis Model 831 Integrating Sound Level Meter

4. Mechanical Ventilation Requirements

California Mechanical Code Chapter 4- Ventilation Air

402.3 Mechanical Ventilation

Where natural ventilation is not permitted by this section or the building code, mechanical ventilation systems shall be designed, constructed, and installed to provide a method of supply air and exhaust air. Mechanical ventilation systems shall include controls, manual or automatic, that enable the fan system to operate wherever the spaces served are occupied. The system shall be designed to maintain minimum outdoor airflow as required by Section 403.0 under any load conditions.

5. Building Shell Controls

The following additional precautionary measures are required to assure the greatest potential for exterior-to-interior noise attenuation by the recommended mitigation measures. These measures apply at those units where closed windows are required:

- Unshielded entry doors having a direct or side orientation toward the primary noise source must be 1-5/8" or 1-3/4" thick, insulated metal or solid-core wood construction with effective weather seals around the full perimeter. Mail slots should not be used in these doors or in the wall of a living space, as a significant noise leakage can occur through them.
- If any penetrations in the building shell are required for vents, piping, conduit, etc., sound leakage around these penetrations can be controlled by sealing all cracks and clearance spaces with a non-hardening caulking compound.
- Ventilation openings shall not compromise the acoustical integrity of the building shell.
- Spray-in or expandable foams are not acceptable as acoustical sealant or as sound absorptive material in walls and ceilings.

APPENDIX C

Noise Measurement Data and Calculation Tables

DNL CALCULATIONS

CLIENT: OSITO HOLDINGS
FILE: 55-004
PROJECT: TENANT SQUARE
DATE: 1/26-27/2023, 2/13/23
SOURCE: TENNANT AVE.

LOCATION 1 Tennant Ave.
Dist. To Source 85 ft.

TIME	Leq	10^Leq/10		
7:00 AM	60.4	1087113.8		
8:00 AM	60.9	1221310.2		
9:00 AM	62.2	1658910.7		
10:00 AM	60.0	1000465.2		
11:00 AM	60.1	1014322.4		
12:00 PM	59.0	788738.4		
1:00 PM	59.6	909460.8		
2:00 PM	61.6	1461130.5		
3:00 PM	58.4	698587.5		
4:00 PM	60.6	1150797.7		
5:00 PM	58.6	726420.3		
6:00 PM	58.6	722834.7		
7:00 PM	57.8	602799.7		
8:00 PM	58.7	733822.5		
9:00 PM	55.5	358385.1	SUM=	14135109.5
10:00 PM	54.5	280833.6	Ld=	71.5
11:00 PM	52.7	185148.4		
12:00 AM	52.3	170879.1		
1:00 AM	48.3	67843.6		
2:00 AM	49.7	93803.9		
3:00 AM	49.7	94316.4		
4:00 AM	54.9	305832.8		
5:00 AM	57.5	566059.4		
6:00 AM	57.8	598571.5	SUM=	2363288.6
			Ln=	63.7

Daytime Level= 71.5
Nighttime Level= 73.7
DNL= 62
24-Hour Leq= 58.4

LOCATION 2 East Prop. Line @ Aamco
Dist. To Source 179 ft. from Tennant Ave.
41 ft. from Aamco Service Bays

TIME	Leq	10^Leq/10		
7:00 AM		1.0		
8:00 AM	52.4	173533.8		
9:00 AM	51.6	145343.6		
10:00 AM	52.1	161715.3		
11:00 AM	55.1	325601.2		
12:00 PM	56.3	427567.8		
1:00 PM	53.5	221721.6		
2:00 PM	57.8	598848.5		
3:00 PM	52.9	193905.0		
4:00 PM	53.3	213917.3		
5:00 PM		1.0		
6:00 PM		1.0		
7:00 PM		1.0		
8:00 PM		1.0		
9:00 PM		1.0	SUM=	2462160.2
10:00 PM		1.0	Ld=	63.9
11:00 PM		1.0		
12:00 AM		1.0		
1:00 AM		1.0		
2:00 AM		1.0		
3:00 AM		1.0		
4:00 AM		1.0		
5:00 AM		1.0		
6:00 AM		1.0	SUM=	9.0
		1.0	Ln=	9.5

Daytime Level= 63.9
Nighttime Level= 19.5
DNL= 50
24-Hour Leq= 50.1

THESE DRAWINGS ARE THE PROPERTY OF OSITO HOLDINGS, LLC AND ARE INTENDED FOR USE SOLELY ON THE PROJECT TITLED HEREON. THESE DRAWINGS AS PROTECTED UNDER COPYRIGHT LAWS ARE NOT TO BE REPRODUCED IN WHOLE OR PART IN ANY MANNER WITHOUT THE EXPRESSED WRITTEN CONSENT OF THE DESIGNER. USE OF THESE DRAWINGS IS LIMITED TO THE SITE INTENDED AND THEIR USE AT ANY OTHER SITE, OR ON OTHER PROJECTS IS PROHIBITED EXCEPT BY PRIOR WRITTEN CONSENT OF THE DESIGNER. ALL REPRODUCTINS OF THESE DRAWINGS, IN WHOLE OR PART, REMAIN UNDER THE OWNERSHIP OF THE DESIGNER AND SHALL BE RETURNED UPON COMPLETION OF THE PROJECT OR UPON REQUEST OF THE DESIGNER.

COPYRIGHT © 2020

OWNER / DEVELOPER:
OSITO HOLDINGS, LLC
P.O. BOX 2827
MESA, AZ 85214
(480) 646 6323

PROJECT:
TENNANT SQUARE
215 TENNANT AVENUE
MORGAN HILL, CA.
COUNTY OF
SANTA CLARA

DRAWING:
NOISE ASSESSMENT STUDY

LICENSED ARCHITECT
ZUISHUANG CHEN
NO. C-28156
REN. 5/31/25
STATE OF CALIFORNIA

REVISIONS:
1 02.20.2023 PLAN CHECK RESPONSE

DATE: JANUARY 22, 2024
SCALE: AS NOTED
DRAWN BY: G.E.MOORE
PROJ. MGR. G.E.MOORE
PROJECT FILE: 0.20-TENNANT
DRAWING: NAS.2

Improvement Plans

for

Tennant Square

215 Tennant Avenue - apn 817-04-059

in the

City of Morgan Hill

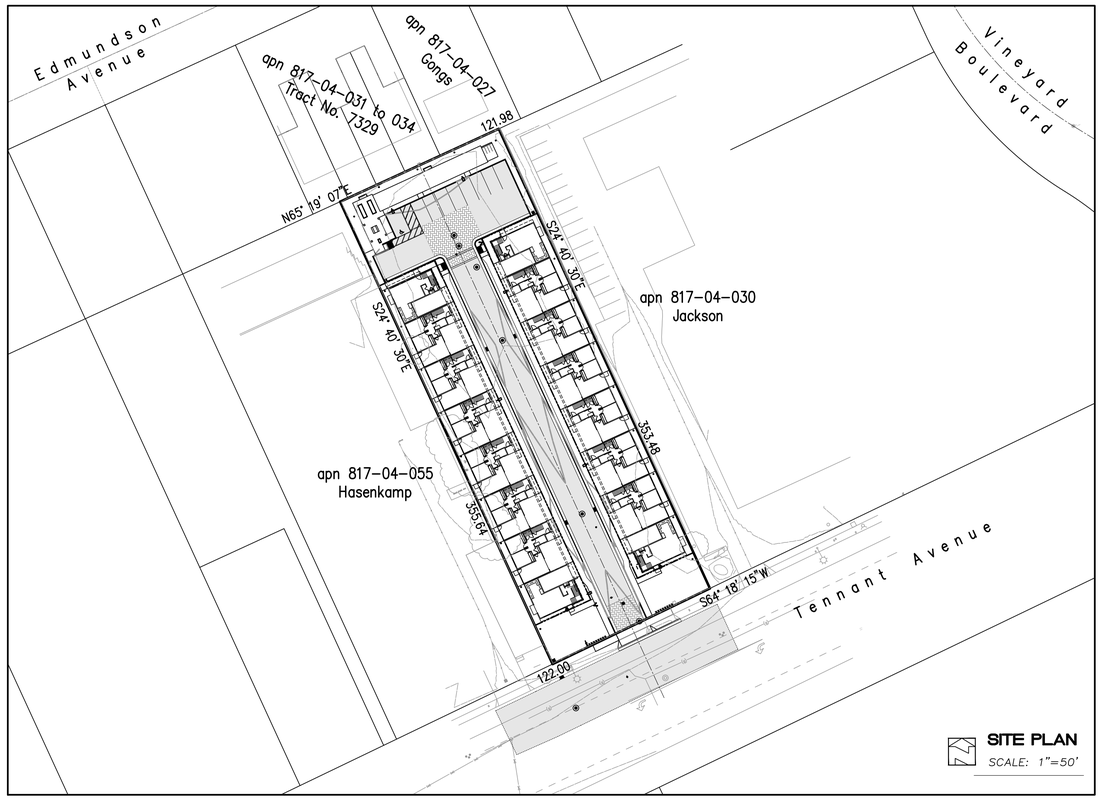

SITE PLAN
SCALE: 1"=50'

CONSTRUCTION SITE THIRD PARTY STORM WATER POLLUTION PREVENTION PLAN (SWPPP)
INSPECTIONS AND COMPLIANCE AS REQUIRED BY THE CITY OF MORGAN HILL
STORMWATER MANAGEMENT PLAN (SWMP)
FOR TENNANT SQUARE
NATIONAL POLLUTANT DISCHARGE ELIMINATION SYSTEM (NPDES)
GENERAL PERMIT FOR STORM WATER DISCHARGES
ASSOCIATED WITH CONSTRUCTION AND LAND DISTURBANCE ACTIVITIES
WDID # 3 43C397059

A. PRIOR TO ANY GRADING ACTIVITY, DEVELOPER/OWNER/CONTRACTOR SHALL OBTAIN THE SERVICES OF A QUALIFIED THIRD PARTY SWPPP INSPECTOR.
   1) Developer shall provide contact information of site's Third Party SWPPP Inspector (TPSI) to Public Works Engineering.
   2) Public Works Engineering shall go over the requirements of inspections with the TPSI.
   3) Public Works Engineering shall coordinate with TPSI in maintaining an inspection log of all SWPPP Inspections and their respective sites.
B. SITE SWPPP INSPECTIONS VIA THIRD PARTY SWPPP INSPECTOR
   1) Project shall have the site inspected by a qualified* (R.C.E., CPESC, CPSWQ, CESSWI, CISEC, etc.) Third Party SWPPP Inspector (TPSI) *Third Party SWPPP Inspectors must hold certification of Qualified SWPPP Practitioner (QSP) or a Qualified SWPPP Development (QSD) issued by the State Water Resources Control Board.
   2) SWPPP Inspections shall occur 48 hours prior to and following a forecasted rain event.
   3) SWPPP Inspections shall occur WEEKLY during the rainy season (September 15th – May 1st)
   4) SWPPP Inspections shall occur BI-WEEKLY during the non-rainy season.
   5) Per each of the inspection conditions 2, 3, or 4, the TPSI shall certify in writing to the Building and Public Works Department if the site is in compliance/non-compliance with the NPDES General Permit for Stormwater, site SWPPP Manual, and Water Pollution Control Drawings (see attached Inspection Check List). NPDES SWPPP Inspectors shall forward onsite and offsite information/certification to the Building (onsite, private property issues) and Public Works (offsite, public right-of-way issues) inspectors respectively.
   6) Prior to rain events, BMPs not in compliance will need to be corrected immediately.
   7) Illicit discharges per the NPDES General Permit, non-compliance of tracking control, and inlet protection within the public right of way shall be address immediately.
   8) Other non-compliance issues need to be addressed within a 24 hour period.
   9) Non-compliance issues which have been corrected shall be verified by TPSI by a follow up inspection.
C. CITY OVERSIGHT OF INSPECTORS
   1) City Inspectors and Engineers shall recieve site inspection information/certification from the TPSI per items B.2, B.3, and/or B.4.
   2) City Inspectors/Engineers shall coordinate with TPSI to address any outstanding items within the required time frame.
   3) Sites that are not able to address non-conformance shall be denied further Building or Public Works inspections or required to stop work until non-compliance issues shall be corrected.

CITY OF MORGAN HILL GENERAL NOTES:

1. TEMPORARY BENCH MARK – BASED ON A CITY APPROVED BENCHMARK AS SHOWN ON THESE PLANS.
2. ALL EXISTING ELEVATIONS SHALL BE FIELD VERIFIED BY CONTRACTOR UNLESS OTHERWISE NOTED.
3. ALL SURVEY MONUMENTS SHALL BE INSTALLED AT LOCATIONS SHOWN ON THE CORRESPONDING FINAL MAP BEFORE ACCEPTANCE OF THE SUBDIVISION.
4. CONTRACTOR SHALL NOT DESTROY EXISTING PERMANENT SURVEY MONUMENTS.
5. ALL WORK SHALL CONFORM TO THE LATEST EDITION OF THE CITY OF MORGAN HILL STANDARD DETAILS FOR CONSTRUCTION WHICH ARE HEREBY MADE A PART OF THESE PLANS. DEVIATIONS FROM THE STANDARD DETAILS MUST BE APPROVED BY THE CITY ENGINEER.
6. DEVELOPER SHALL ARRANGE FOR A PRE-CONSTRUCTION MEETING WITH THE CITY ENGINEER (MUNICIPAL CODE 17.32.250B) PRIOR TO COMMENCING ANY CONSTRUCTION. AN ENCROACHMENT PERMIT SHALL BE OBTAINED FROM THE PUBLIC WORKS DEPARTMENT UPON COMPLETION OF SAID MEETING AND PRIOR TO CONSTRUCTION OF ANY IMPROVEMENTS WITHIN AN EXISTING OR OFFERED FOR DEDICATION RIGHT-OF-WAY, PUBLIC UTILITY EASEMENT OR PUBLIC SERVICE EASEMENT.
7. A GRADING PERMIT SHALL BE OBTAINED FROM THE CITY OF MORGAN HILL BUILDING DIVISION PRIOR TO ANY GRADING OF BUILDING PADS. APPLICANT FOR THE GRADING PERMIT SHALL PROVIDE A PLAN REVIEW LETTER FROM THE SOILS ENGINEER. A GRADING PERMIT DOES NOT GIVE CONTRACTOR PERMISSION TO COMMENCE OFFSITE (STREET) GRADING. ONLY UPON CITY APPROVAL OF THE IMPROVEMENT PLANS AND COMPLETION OF A PRECONSTRUCTION MEETING, SHALL CONTRACTOR COMMENCE OFF-SITE GRADING.
8. CONTRACTOR SHALL NOTIFY THE PUBLIC WORKS DEPARTMENT 48 HOURS PRIOR TO COMMENCEMENT OF ANY WORK PHASE. AT THAT TIME AN "INSPECTION REQUEST FORM" SHALL BE COMPLETED TO ENSURE PROPER SCHEDULING OF AN INSPECTION WITH THE CITY ENGINEER'S REPRESENTATIVE.
9. CONTRACTOR SHALL PRESERVE ALL SURROUNDING PROPERTY BY CONFINING OPERATIONS TO WITHIN THE "LIMITS OF WORK". CONTRACTOR SHALL BE RESPONSIBLE FOR MAINTAINING ACCESS FOR ALL ADJOINING RESIDENTS, PLACES OF BUSINESS, AND PROPERTIES AT ALL TIMES AND IN A SAFE MANNER. CONTRACTOR SHALL MAKE PROPER NOTIFICATION AT LEAST 24 HOURS IN ADVANCE OF ANY INTERRUPTION IN ACCESS OR SERVICE TO THE ABOVE PROPERTY OWNERS AS WELL AS TO THE CITY ENGINEER'S REPRESENTATIVE.
10. CONTRACTOR SHALL ONLY USE EQUIPMENT PROVIDED WITH A SPARK ARRESTOR DEVICE TO REDUCE A POTENTIAL FIRE HAZARD.
11. RIGHT OF MODIFICATION: APPROVAL OF THIS PLAN DOES NOT RELEASE SUBDIVIDER OF THE RESPONSIBILITY FOR CORRECTION OF MISTAKES, ERRORS, OR OMISSION, CONTAINED THEREIN. IF DURING THE COURSE OF CONSTRUCTION, PUBLIC INTEREST REQUIRES A MODIFICATION OF OR A DEPARTURE FROM THESE IMPROVEMENT PLANS OR THE CITY STANDARD DETAILS FOR CONSTRUCTION, THE CITY ENGINEER SHALL HAVE THE AUTHORITY TO REQUIRE SUCH MODIFICATIONS AND DEPARTURES AND TO SPECIFY THE MANNER IN WHICH THE SAME IS TO BE MADE.
12. OFF-SITE WATER & DUST CONTROL:
    CONTRACTOR SHALL PROVIDE A WATER TRUCK ONSITE AT ALL TIMES. CONTRACTOR WILL BE ALLOWED TO DRAW WATER FROM THE CITY OF MORGAN HILL WATER DISTRIBUTION SYSTEM ONLY AFTER OBTAINING A HYDRANT METER FROM THE PUBLIC WORKS DEPARTMENT AND AN INSPECTION OF THE WATER TRUCK FOR A PROPER BACKFLOW DEVICE OR "AIR-GAP" FILLING PIPE. CONTRACTOR SHALL KEEP DOWN DUST FROM CONSTRUCTION ACTIVITY TO THE MAXIMUM EXTENT POSSIBLE. CONTRACTOR SHALL CLEAN ALL EXISTING STREETS, CURBS, GUTTERS, AND SIDEWALKS AFFECTED BY THE PROJECT AT THE END OF EACH WORKING DAY.
13. MATERIAL STORAGE:
    NO MATERIAL SHALL BE STORED NEAR THE EDGE OF PAVEMENT, TRAVELED WAY, SIDEWALK, DRIVEWAY, OR SHOULDER LINE WHICH MAY CREATE A HAZARD FOR VEHICULAR AND PEDESTRIAN TRAFFIC.
14. TRAFFIC CONTROL:
    CONTRACTOR SHALL SUBMIT A TRAFFIC CONTROL PLAN FOR APPROVAL TO THE PUBLIC WORKS DEPARTMENT A MINIMUM OF 5 DAYS PRIOR TO ANY WORK WITHIN AN EXISTING PUBLIC STREET. THE PLAN SHALL BE SIGNED BY A LICENSED TRAFFIC ENGINEER WHEN IT INVOLVES AN ARTERIAL STREET. CONTRACTOR SHALL PROVIDE ALL NECESSARY TRAFFIC CONTROL IN ACCORDANCE WITH THE LATEST EDITION OF "MUTCD", WHILE WORKING WITHIN THE PUBLIC RIGHT-OF WAY. TWO TRAFFIC LANES (10' MIN.) SHALL BE OPEN TO VEHICULAR TRAFFIC DURING ALL HOURS, WEEKENDS, AND HOLIDAYS. ONE LANE TWO WAY TRAFFIC, MAY BE PERMITTED UNDER THE CONTROL OF NOT LESS THAN 2 (TWO) COMPETENT FLAGMEN DURING CONSTRUCTION OPERATIONS. STREET CLOSURES AND DETOURS SHALL ONLY TAKE PLACE UPON CITY ENGINEER APPROVAL AND POLICE DEPARTMENT COORDINATION.
15. TRENCH EXCAVATION:
    CONTRACTOR SHALL EXERCISE DILIGENCE IN REVIEWING THE APPROVED SOILS REPORT AND OTHER AVAILABLE RESOURCES TO FAMILIARIZE HIMSELF/HERSELF WITH THE SOIL CONDITIONS TO BE ENCOUNTERED IN THE COURSE OF WORK IDENTIFIED IN THESE PLANS. CONTRACTOR SHALL NOT CAUSE DAMAGE TO ADJACENT TREES OR EXISTING STRUCTURES ABOVE OR BELOW GRADE DURING TRENCH EXCAVATION. ALL ROCKS, BOULDERS, AND LARGE STONES ENCOUNTERED SHALL BE REMOVED TO PROVIDE A CLEARANCE OF 6 INCHES AROUND THE PIPE. THE TRENCH BOTTOM SHALL BE REFILLED TO GRADE WITH SAND, PEA GRAVEL, OR OTHER APPROVED GRANULAR MATERIAL. CLEAN 1/4" OR ½" PEA GRAVEL SHALL BE USED IN AREAS OF MOIST CONDITION, OR WHERE THE SOIL HAS A HISTORY OF SUBSURFACE WATER. IF THE BOTTOM OF THE TRENCH IS FOUND TO CONSIST OF WET OR UNSTABLE MATERIAL INCAPABLE OF PROPERLY SUPPORTING THE PIPE, THE MATERIAL SHALL BE REMOVED TO A MINIMUM DEPTH OF 12 INCHES BELOW THE UNSTABLE LAYER FOR THE FULL WIDTH OF THE TRENCH AND REPLACED WITH APPROVED GRANULAR MATERIAL. TRENCH EXCAVATION MATERIAL DEPOSITED ADJACENT TO THE TRENCH SHALL BE PLACED AND LOCATED TO PREVENT SPILLAGE INTO THE OPEN TRENCH.
16. TRENCH SAFETY:
    IT SHALL BE CONTRACTOR'S RESPONSIBILITY TO PROVIDE ALL NECESSARY TRENCH SAFETY MEASURES FOR EXCAVATIONS. ALL TRENCH SAFETY MEASURES SHALL BE IN ACCORDANCE WITH THE LATEST CAL-OSHA GUIDELINES. CONTRACTOR SHALL PROVIDE EVIDENCE OF A CAL-OSHA TRENCHING PERMIT AT THE PRECONSTRUCTION MEETING.
17. EXCAVATIONS WITHIN THE PUBLIC RIGHT-OF-WAY SHALL BE BACKFILLED, COMPACTED, AND TEMPORARILY PAVED WITH COLD MIX "CUT BACK" TYPE A.C. TO ALLOW FOR VEHICULAR AND PEDESTRIAN TRAFFIC PRIOR TO 4:00 P.M. THE USE OF TRENCH PLATES IS ALLOWED, PROVIDED THE CONTRACTOR COVERS ALL EDGES OF THE PLATES WITH COLD MIX MATERIAL. IT SHALL BE THE CONTRACTOR'S RESPONSIBILITY TO MAINTAIN ON A DAILY BASIS, INCLUDING WEEKENDS, THE AMOUNT OF MATERIAL NECESSARY TO MAINTAIN THE TRENCH SURFACE FLUSH WITH THE EXISTING STREET OR SIDEWALK. IN ADDITION, THE CONTRACTOR SHALL RESPOND TO AND CORRECT SHIFTING TRENCH PLATES REGARDLESS OF THE TIME OF DAY. IF CONTRACTOR FAILS TO CORRECT SINKING BACKFILL MATERIAL OR SHIFTING TRENCH PLATES IN A TIMELY MANNER, CITY SHALL RESERVE THE RIGHT TO CORRECT THE PROBLEM AND BACK CHARGE THE CONTRACTOR.
18. JOINING EXISTING PAVEMENT:
    EXISTING PAVEMENT WHICH IS TO BE JOINED BY NEW PAVEMENT SHALL BE SAW CUT VERTICAL TO PROVIDE STRAIGHT, TRUE AND NEAT JOINTS. OVERLAPPING OF EXISTING PAVEMENT WITHOUT SAW CUTTING OR GRINDING SHALL NOT BE PERMITTED. THE VERTICAL EDGES SHALL BE TACKED PRIOR TO PAVING. TERMINALS OF ALL SURFACING INDICATED ON THE PLANS SHALL JOIN ANY EXISTING SURFACE IN A SMOOTH BUTT JOINT. CONFORM PAVING BY METHOD OF ABRASIVE GRINDING WILL BE ALLOWED UPON APPROVAL OF THE CITY ENGINEER.

SANITARY SEWERS:

19. ALL MANHOLES, SEWER MAINS, AND LATERALS MUST PASS A LEAKAGE TEST AS DESCRIBED IN THE CITY OF MORGAN HILL STANDARD DETAILS FOR CONSTRUCTION. AFTER ALL BACKFILL, TESTING, AND PAVEMENT RESTORATION HAS BEEN COMPLETED, THE CONTRACTOR SHALL FLUSH AND CLEAN ALL SEWER LINES 24 INCHES OR LESS IN DIAMETER BY THE "WAYNE BALL METHOD". AFTER THE LEAKAGE TEST, BUT PRIOR TO PAVING, A TELEVISION INSPECTION SHALL BE PERFORMED AT ALL LOCATIONS OF NEWLY INSTALLED SEWER MAINS AT CONTRACTOR'S EXPENSE. THE UNDERGROUND CONTRACTOR MUST KEEP AN ACCURATE RECORD OF MANHOLES AND THE DISTANCE BETWEEN THEM AND EACH WYE BRANCH LATERAL, AND THEIR DIRECTION.
20. BEFORE ANY UPSTREAM SEWERS ARE CONSTRUCTED, THE CONTRACTOR SHALL VERIFY THE ELEVATION AND LOCATION OF EXISTING SEWER LINES TO BE CONNECTED.
21. THE END OF EACH NEW LATERAL SHALL BE MARKED AS SHOWN IN DETAIL S-2. THE CONCRETE CONTRACTOR SHALL STAMP AN "S" ON THE FACE OF CURB DIRECTLY ABOVE THE LATERAL.

WATER LINES:

22. CONTRACTOR SHALL NOT TURN OFF OR ON ANY VALVES BELONGING TO THE CITY'S WATER SYSTEM. ONLY DEPARTMENT OF PUBLIC WORKS PERSONNEL SHALL OPEN THE NECESSARY VALVES TO CONNECT NEW LINES. FAILURE TO FOLLOW THIS REQUIREMENT SHALL BE CONSIDERED AN "UNLAWFUL CONNECTION" AND MAY RESULT IN ISSUING OF A CITATION AND FINES AS SPECIFIED IN SECTION 13.04 OF THE MORGAN HILL MUNICIPAL CODE.
23. CONNECTIONS REQUIRING SHUT DOWN OF THE SYSTEM SHALL BE DONE BETWEEN THE HOURS OF 12:00 MIDNIGHT AND 6:00 AM, AND ONLY UPON COORDINATION WITH THE DEPARTMENT OF PUBLIC WORKS.
24. ALL WATER LINES SHALL BE TESTED AFTER COMPLETION OF THE TRENCH BACKFILL AND COMPACTION OF THE FINAL BASE MATERIAL, BUT PRIOR TO PLACEMENT OF THE FINAL ROADWAY SURFACE.
25. CONTRACTOR SHALL PLACE MARKER POSTS ADJACENT TO ALL AIR RELIEF VALVES AND BLOW OFF ASSEMBLIES ALONG WATER MAINS LOCATED IN UNIMPROVED AREAS OR FIELDS. THE POSTS SHALL BE PRESSURE TREATED REDWOOD 4"X4"X6', PAINTED WHITE, BURIED 2'-6", AND INSCRIBED WITH "W/A.V." (FOR AIR RELIEF VALVES) OR "B.O." (FOR BLOW OFF ASSEMBLIES), IN 3 INCH HIGH CARVED LETTERS PAINTED BLUE.
26. THE CONCRETE CONTRACTOR SHALL STAMP A LETTER "W" ON THE FACE OF CURB DIRECTLY ABOVE THE WATER SERVICE.

BACKFILL & COMPACTION:

27. BACKFILL MATERIAL SHALL BE HAND PLACED AND COMPACTED UP TO AT LEAST 6" ABOVE THE PIPE. WHEN USING NATIVE SOIL AS TRENCH BACKFILL, THE MINIMUM SAND COVER SHALL BE 12".
28. JETTING AND/OR FLOODING OF TRENCH BACKFILL MATERIAL WILL BE PERMITTED ONLY IF APPROVED BY THE SOILS ENGINEER AND CITY ENGINEER.
29. ANY EXCESS EXCAVATION MATERIAL MAY BE DEPOSITED ONSITE IN AREAS AND AT DEPTHS DESIGNATED BY THE OWNER, AND WITH APPROVAL OF THE CITY ENGINEER.
30. THE MINIMUM RELATIVE COMPACTION FOR TRENCH BACKFILL, SUBGRADE AND BASE MATERIAL SHALL BE 95% THROUGHOUT THE PROJECT. UNLESS RECOMMENDED OTHERWISE IN THE SOILS REPORT AND APPROVED BY THE CITY ENGINEER.
31. IF TRENCH BACKFILL MATERIAL IS 100% SAND, THE CITY SHALL CONDUCT COMPACTION TESTS OF THE LIFTS SPECIFIED. IF THE TRENCH BACKFILL MATERIAL IS NATIVE SOIL, CONTRACTOR SHALL PROVIDE COMPACTION TEST RESULTS OF THE LIFTS SPECIFIED IN THE SOILS REPORT TO THE CITY ENGINEER FROM A CERTIFIED TESTING LABORATORY AT CONTRACTOR'S EXPENSE.
32. ANY AGGREGATE BASE THAT BECOMES CONTAMINATED DURING CONSTRUCTION SHALL BE REMOVED AND REPLACED WITH UNCONTAMINATED BASE.
33. WATER POLLUTION CONTROL DRAWING:
    AN EROSION CONTROL AND SEDIMENT CONTROL DRAWING SHALL BE REQUIRED PRIOR TO ANY PHYSICAL DEVELOPMENT OF A PROPERTY EROSION CONTROL SHALL BE PLANNED BETWEEN SEPTEMBER 15TH AND MAY 1ST. AND SEDIMENT CONTROL SHALL BE PLANNED YEAR ROUND FOR THE LIFE OF THE PROJECT. SAID PLAN SHALL MEET THE MINIMUM STANDARDS AND SPECIFICATIONS OF THE CALIFORNIA STORMWATER QUALITY ASSOCIATION (CASQA) FOR STORMWATER BEST MANAGEMENT PRACTICES (BMP's). CONTRACTOR SHALL BE RESPONSIBLE FOR INITIATING THE REQUIRED EROSION CONTROL MEASURES.
34. CURB INLET STENCILING:
    ALL CURB INLETS SHALL HAVE THERMOPLASTIC STENCILING: "NO DUMPING, FLOWS TO CREEK/RIVER".
35. ELECTROLIERS:
    ALL ELECTROLIERS SHALL BE INSTALLED BY THE DEVELOPER. SEE ELECTRICAL SECTION OF THE STANDARD DETAILS. ELECTROLIERS SHALL BE BETA LED. A DIVISION OF RUDD LIGHTING OR APPROVED EQUAL
    (30 LED @ RESIDENTIAL; 50 LED @ COLLECTION; 80 LED @ ARTERIALS; AT LOCATIONS SHOWN ON THESE PLANS).
36. STOCK PILES: ALL STOCK PILES SHALL BE PROPERLY COVERED AND SECURED WITH 10 MIL VAPOR BARRIER.

GRADING QUANTITIES

BUILDING	CUT=±187 C.Y.	FILL=±57 C.Y.
DRIVEWAY/PARKING LOT	CUT=±391 C.Y.	FILL=±0 C.Y.
LANDSCAPING	CUT=±36 C.Y.	FILL=±120 C.Y.
STORM CHAMBERS	CUT=±338 C.Y.	FILL=±0 C.Y.
TOTAL	CUT=952 C.Y.	FILL=±177 C.Y.

PROJECT SUMMARY

1. GROSS AREA: 43,249 S.F.
2. ASSESSOR'S PARCEL NUMBER: 817-04-059
3. EXISTING LAND USE – VACANT
   PROPOSED LAND USE – RESIDENTIAL
4. EXISTING ZONING – RESIDENTIAL ATTACHED LOW DENSITY
   PROPOSED ZONING – RESIDENTIAL ATTACHED LOW DENSITY
5. NUMBER OF UNITS – 16 RESIDENTIAL CONDOMINIUMS
6. COMMON OPEN SPACE – 6,799 SQ. FT.

BASIS OF BEARINGS

THE BEARING, NORTH 24°40'40" WEST OF THE WESTERLY PROPERTY LINE ALONG LOTS 1 AND 2 AS SHOWN ON PARCEL MAP "TENNANT AVENUE BUSINESS PARK", AS FILED IN BOOK 574 OF MAPS, PAGES 1-3 ON MAY 12th, 1987, SANTA CLARA COUNTY RECORDS.

BENCHMARK

SANTA CLARA VALLEY WATER DISTRICT

BENCHMARK ID: BM321

ELEVATION: NAVD 88 – 330.37 FEET

DESCRIPTION:
LOCATED ON THE TOP OF SIDEWALK, 3 FEET EAST OF WESTERLY CONCRETE HEADWALL, AT THE CORNER OF EDMUNDSON AVENUE. CITY OF MORGAN HILL.

FLOODZONE STATEMENT

FLOOD NOTE: BY GRAPHIC PLOTTING ONLY, THIS PROPERTY IS IN ZONE X (AREAS OF 0.2% ANNUAL CHANCE FLOOD; AREAS OF 1% ANNUAL CHANCE FLOOD WITH AVERAGE DEPTHS OF LESS THAN 1 FOOT OR WITH DRAINAGE AREAS LESS THAN 1 SQUARE MILE; AND AREAS PROTECTED BY LEVEES FROM 1% ANNUAL CHANCE FLOOD) COMMUNITY PANEL NO. 06085C0607H, WHICH BEARS AN EFFECTIVE DATE OF MAY 18, 2009 AND IS NOT IN A SPECIAL FLOOD HAZARD AREA. BY TELEPHONE CALL DATED: MAY 18, 2009 TO THE NATIONAL FLOOD INSURANCE PROGRAM (800-638-6620) WE HAVE LEARNED THIS COMMUNITY DOES CURRENTLY PARTICIPATE IN THE PROGRAM. NO FIELD SURVEYING WAS PERFORMED TO DETERMINE THIS ZONE AND AN ELEVATION CERTIFICATE MAY BE NEEDED TO VERIFY THIS DETERMINATION OR APPLY FOR A VARIANCE FROM THE FEDERAL EMERGENCY MANAGEMENT AGENCY.

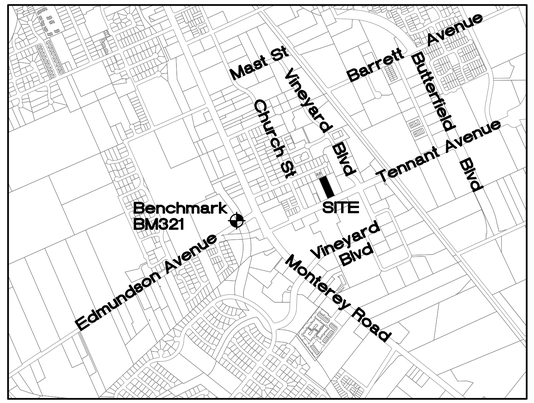

VICINITY MAP
NO SCALE

QUANTITY ESTIMATE
DESCRIPTION:

STORM DRAIN	*QUANTITY*
6" PVC	*730 LF*
15" RCP	*253 LF*
18" RCP	*290 LF*
CURB INLET	*4 EA*
DROP INLET (V1)	*17 EA*
DROP INLET (V12)	*6 EA*
STORM DRAIN MANHOLE	*4 EA*
CONNECT TO EXISTING SD MANHOLE	*1 EA*
STORM CHAMBERS	*54 EA*
SANITARY SEWER	
8" PVC	*272 LF*
SANITARY SEWER LATERAL	*16 EA*
SANITARY SEWER MANHOLE	*2 EA*
WATER MAIN	
8" DIP	*319 LF*
CONNECT TO EXISTING WATER MAIN	*1 EA*
WATER METERS	*17 EA*
4" MANIFOLD COMPLETE TO MAIN	*2 EA*
BACKFLOW PREVENTER (IRRIGATION METER)	*1 EA*
FIRE HYDRANT COMPLETE TO MAIN	*2 EA*
JOINT TRENCH	*1 LS*
STREET (ON-SITE)	
4" AC OVER 10" BASEROCK	*8,410 SF*
HANDICAP RAMP	*3 EA*
ROLL CURB	*479 LF*
CURB & GUTTER	*188 LF*
6" VERTICAL CURB	*195 LF*
SIDEWALK	*621 LF*
STREET (OFF-SITE)	
SAWCUT, REMOVE & DISPOSE EXISTING CURB, GUTTER & SIDEWALK	*1 EA*
GRIND EXISTING AC & OVERLAY	*4,254 SF*
DRIVEWAY APPROACH	*1 EA*
CURB & GUTTER	*18 LF*
5' WIDE SIDEWALK	*42 LF*

NOTE:

FIRE SERVICE: UNDERGROUND FIRE SERVICE SHALL BE UNDER A SEPARATE PERMIT AS A DEFERRED SUBMITTAL.

SHEET INDEX

C.1	COVER SHEET
C.2	PROJECT NOTES – LEGEND – ABBREVIATIONS
C.3	EXISTING TOPOGRAPHY PLAN
C.4	SITE PLAN
C.5–C.6	GRADING & DRAINAGE PLAN
C.7	DEVELOPMENT PLAN & CROSS SECTIONS
C.8	UTILITY PLAN & OSITO PLACE PROFILE
C.9	TENNANT AVENUE – PLAN & PROFILE
C.10	CITY PAVEMENT SPECIFICATIONS & DETAILS
C.11	EROSION CONTROL PLAN
C.12	STORMWATER CONTROL PLAN
C.13–14	STORMTECH CHAMBER SYSTEM DETAILS
C.15	STRIPING & SIGNAGE PLAN

DEVELOPER/OWNER

OSITO HOLDINGS LLC
PO BOX 362
MORGAN HILL, CA 95038

TELEPHONE: 408 981-9114

DESIGNER

GARY MOORE & ASSOCIATES
60 WEST MAIN AVENUE, SUITE 12A
MORGAN HILL, CA 95037

TELEPHONE: 408 779-1710

CIVIL ENGINEER

HANNA – BRUNETTI
7651 EIGLEBERRY STREET
GILROY, CA 95020

OFFICE: 408 842-2173
EMAIL: ENGINEERING@HANNABRUNETTI.COM

date: 12/4/24

Amanda Joy Musy-Verdel

R.C.E. # 69278

REGISTERED PROFESSIONAL ENGINEER
AMANDA JOY MUSY-VERDEL
NO. 69278
CIVIL
STATE OF CALIFORNIA

Cover Sheet - Improvement Plans
Tennant Square - apn 817-04-059

DRAWN | DESIGN | HOR
CHECKED | DATE | VERT
APPROVED | DATE | JOB NUMBER 20002

Scott C Creer R.C.E. 58870 CITY ENGINEER

City of Morgan Hill
Public Works Department
CITY OF MORGAN HILL
100 Edes Ct. Morgan Hill, CA 95037 (408)776-7337, Fax (408)779-6282

NO. | DESCRIPTION | DATE | BY
Revisions

FILE NUMBER: PWPR2021-0006
PRINT DATE: 2/12/2024
SHEET NUMBER: C.1 of 15

HB JOB NO. 20002

Tennant Square – apn 817-04-059 Improvement Plans q:\2-14\proj\

PROJECT NOTES

1. ALL WORK AND MATERIALS SHALL BE IN CONFORMANCE WITH THE FOLLOWING:
   A. STANDARD SPECIFICATIONS AND STANDARD DETAILS, LATEST EDITION, OF THE CITY OF MORGAN HILL.
   B. THESE PLANS AND SPECIFICATIONS AS APPROVED FOR CONSTRUCTION BY THE CITY OF MORGAN HILL, DEPARTMENT OF PUBLIC WORKS.
2. CONTRACTOR SHALL SECURE AND COMPLY WITH CITY PERMIT REQUIREMENTS. CONTRACTOR SHALL NOTIFY THE CITY 2 WORKING DAYS PRIOR TO THE INTENTION TO COMMENCE WORK. (PUBLIC WORKS DEPARTMENT PHONE 408–776–7333).
3. CONTRACTOR SHALL SUPPLY ALL EQUIPMENT, LABOR AND MATERIALS NECESSARY TO PERFORM THE WORK SHOWN ON THIS PLAN. CONTRACTOR SHALL USE ADEQUATE NUMBERS OF SKILLED WORKMEN WHO ARE THOROUGHLY TRAINED AND EXPERIENCED IN THE NECESSARY CRAFTS AND WHO ARE COMPLETELY FAMILIAR WITH THE SPECIFIED REQUIREMENTS AND THE METHOD NEEDED FOR PROPER PERFORMANCE OF THE WORK.
4. CONTRACTOR SHALL COORDINATE ALL WORK, INCLUDING SUB–CONTRACTORS' WORK, SO AS TO ELIMINATE CONFLICTS AND WORK TOWARDS THE GENERAL GOOD AND COMPLETION OF THE ENTIRE PROJECT.
5. A REASONABLE EFFORT HAS BEEN MADE TO LOCATE AND DELINEATE ALL KNOWN UNDERGROUND UTILITIES. THE CONTRACTOR IS CAUTIONED THAT ONLY EXCAVATION WILL REVEAL THE TYPES, EXTENT, SIZES, LOCATION AND DEPTHS OF SUCH UNDERGROUND UTILITIES. HOWEVER, NEITHER THE CITY, NOT THE CONSULTANT CAN ASSUME RESPONSIBILITIES FOR THE COMPLETENESS OR ACCURACY OF THE DELINEATION OF SUCH UNDERGROUND UTILITIES, NOR FOR THE EXISTENCE OF OTHER BURIED OBJECTS OR UTILITIES WHICH ARE NOT SHOWN ON THESE DRAWINGS. THE CONTRACTOR IS HEREBY NOTIFIED THAT, PRIOR TO COMMENCING CONSTRUCTION, HE IS RESPONSIBLE FOR CONTACTING THE UTILITY COMPANIES INVOLVED AND REQUESTING A VISUAL VERIFICATION OF THE LOCATIONS OF THEIR UNDERGROUND FACILITIES.
6. THE UTILITY COMPANIES ARE MEMBERS OF THE UNDERGROUND SERVICE ALERT ONE CALL PROGRAM. THE CONTRACTOR OR ANY SUB–CONTRACTOR FOR THIS CONTRACT SHALL NOTIFY MEMBER OF THE U.S.A. 2 WORKING DAYS IN ADVANCE OF PERFORMING EXCAVATION WORK BY CALLING THE TOLL–FREE NUMBER 800–227–2600. EXCAVATION IS DEFINED AS BEING 18 OR MORE INCHES IN DEPTH BELOW THE EXISTING GROUND.
7. THE CONTRACTOR SHALL REMOVE ALL OBSTRUCTIONS, BOTH ABOVE GROUND AND UNDERGROUND, EXCEPT AS NOTED IN ITEM 5 ABOVE, AS NECESSARY FOR THE CONSTRUCTION OF THE PROPOSED IMPROVEMENTS.
8. CONTRACTOR IS RESPONSIBLE FOR COMPLIANCE WITH ANY CURRENTLY APPLICABLE SAFETY LAW OF ANY JURISDICTIONAL BODY. FOR INFORMATION REGARDING THIS PROVISION, THE CONTRACTOR IS DIRECTED TO CONTACT THE STATE OF CALIFORNIA, DIVISION OF OCCUPATIONAL SAFETY AND HEALTH, SAN JOSE, CA. PHONE (408) 452–7288. THE CONTRACTOR SHALL BE RESPONSIBLE FOR ALL BARRICADES, SAFETY DEVICES, AND CONTROL OF TRAFFIC WITHIN THE CONSTRUCTION AREA. FOR ALL TRENCH EXCAVATION FIVE (5) FEET OR MORE IN DEPTH, THE CONTRACTOR SHALL OBTAIN A PERMIT FROM THE DIVISION OF OCCUPATIONAL SAFETY AND HEALTH, 2010 N. FIRST STREET, SUITE 401, SAN JOSE, CA 95131, PRIOR TO BEGINNING ANY EXCAVATION. A COPY OF THIS PERMIT SHALL BE AVAILABLE AT THE CONSTRUCTION SITE AT ALL TIMES.
9. THE CONTRACTOR SHALL BE RESPONSIBLE FOR THE PROTECTION OF ALL EXISTING SURVEY MONUMENTS AND OTHER SURVEY MARKERS DURING CONSTRUCTION. ALL SUCH MONUMENTS OR MARKERS DAMAGED OR DESTROYED DURING CONSTRUCTION SHALL BE REPLACED AT THE CONTRACTORS EXPENSE.
10. WHERE THE FIRM OF HANNA & BRUNETTI DOES NOT PROVIDE CONSTRUCTION STAKES, SAID FIRM WILL ASSUME NO RESPONSIBILITY WHATSOEVER FOR IMPROVEMENTS CONSTRUCTED THEREFROM.
11. CONSTRUCTION CONTRACTOR AGREES THAT IN ACCORDANCE WITH GENERALLY ACCEPTED CONSTRUCTION PRACTICES, CONSTRUCTION CONTRACTOR WILL BE REQUIRED TO ASSUME SOLE AND COMPLETE RESPONSIBILITY FOR THE JOB SITE CONDITIONS DURING THE COURSE OF CONSTRUCTION OF THE PROJECT, INCLUDING SAFETY OF ALL PERSONS AND PROPERTY, THAT THIS REQUIREMENT SHALL BE MADE TO APPLY CONTINUOUSLY AND NOT BE LIMITED TO NORMAL WORKING HOURS, AND CONSTRUCTION CONTRACTOR FURTHER AGREES TO DEFEND, INDEMNIFY AND HOLD DESIGN PROFESSIONAL, AND THE CITY HARMLESS FROM ANY AND ALL LIABILITY, REAL AND ALLEGED, IN CONNECTION WITH THE PERFORMANCE OF WORK ON THIS PROJECT, EXCEPTING LIABILITY ARISING FROM THE SOLE NEGLIGENCE OF THE DESIGN PROFESSIONAL, OR THE CITY.
12. THE CONSTRUCTION CONTRACTOR SHALL BE RESPONSIBLE FOR TRAFFIC CONTROL. ALL WARNING AND TRAFFIC CONTROL SIGNS, AND LOCATIONS FOR THE SIGNS SHALL BE IN ACCORDANCE WITH MUTCD REQUIREMENTS AND APPROVED BY THE CITY ENGINEER.
13. CONTRACTOR SHALL VERIFY ALL DIMENSIONS AND CONDITIONS ON THE JOB, AND SHALL NOTIFY HANNA & BRUNETTI OF ANY VARIATION FROM THE DIMENSIONS AND CONDITIONS SHOWN. WRITTEN DIMENSIONS SHALL TAKE PRECEDENCE OVER SCALED DIMENSIONS. CONTRACTOR SHALL BE RESPONSIBLE FOR SUBMITTING SHOP DRAWINGS BEFORE PROCEEDING WITH ANY FABRICATION.
14. ANY DISCREPANCIES OR OMISSIONS FOUND IN THE CONTRACT DOCUMENTS SHALL BE REPORTED TO THE CITY ENGINEER AND THE DESIGN ENGINEER IMMEDIATELY. THE DESIGN ENGINEER WILL CLARIFY DISCREPANCIES OR OMISSIONS, IN WRITING, WITHIN A REASONABLE TIME.
15. BEFORE ORDERING STREET NAME SIGNS, THE CONTRACTOR SHALL CONTACT THE CITY FOR VERIFICATION OF STREET NAMES AND MANUFACTURER OF CITY STANDARD SIGNS. (PUBLIC WORKS DEPARTMENT PHONE 408–776–7337).
16. CONTRACTOR SHALL POSSESS A VALID CLASS A – GENERAL ENGINEERING CONTRACTOR LICENSE.
17. THE SITE IS AN AREA OF HIGH ARCHEOLOGICAL PROBABILITY. IN THE EVENT THAT ARCHEOLOGICAL OR HISTORICAL TRACES ARE ENCOUNTERED DURING GRADING, THE WORK SHALL BE STOPPED, THE COMMUNITY DEVELOPMENT DEPARTMENT SHALL BE CONTACTED, AND AN ARCHEOLOGIST SHALL BE RETAINED AT THE CITY'S EXPENSE TO EXAMINE THE FIND AND TO MAKE THE APPROPRIATE RECOMMENDATIONS. (PLNG)

UNDERGROUND NOTES (GENERAL)

1. CONTRACTOR SHALL EXPOSE AND VERIFY LOCATION AND ELEVATION OF EXISTING UTILITIES, INCLUDING STORM DRAINS, SANITARY SEWERS AND WATER LINES, BEFORE ORDERING MATERIALS AND/OR CONSTRUCTING NEW FACILITIES.
2. ALL MANHOLES AND VALVE BOXES TO BE SET FLUSH WITH FINISHED GRADE, UNLESS OTHERWISE NOTED.
3. ALL TRENCHES AND EXCAVATIONS SHALL BE CONSTRUCTED IN STRICT COMPLIANCE WITH THE APPLICABLE SECTIONS OF CALIFORNIA AND FEDERAL O.S.H.A. REQUIREMENTS AND OTHER APPLICABLE SAFETY ORDINANCES. CONTRACTOR SHALL BEAR FULL RESPONSIBILITY FOR TRENCH SHORING DESIGN AND INSTALLATION. SEE PROJECT NOTES, NOTE 8. (THIS SHEET)
4. PIPE MATERIALS AND INSTALLATION PROCEDURE SHALL BE IN ACCORDANCE WITH APPLICABLE SECTIONS OF THE STANDARD SPECIFICATIONS AND THE MANUFACTURER'S RECOMMENDATIONS.
5. SHOULD ANY WATER SYSTEM MAINS OR SERVICES BE DAMAGED BY THE CONTRACTOR, THE WATER SYSTEM SHALL BE REPAIRED IN ACCORDANCE WITH THE STANDARD SPECIFICATIONS OF THE CITY OF MORGAN HILL. THE CITY OF MORGAN HILL SHALL BE PROMPTLY NOTIFIED AND REPAIRS SHALL BE MADE AS DESIGNATED BY THE CITY OF MORGAN HILL AT THE CONTRACTOR'S EXPENSE.
6. TRENCHES SHALL BE BACKFILLED WITH COMPACTED SAND BACKFILL MATERIAL IN ACCORDANCE WITH CITY STANDARD DETAILS U–1, U–2, U–3 A SAMPLE ANALYSIS BY A GEOTECHNICAL ENGINEER OR A CERTIFICATE OF COMPLIANCE FROM THE MATERIAL SUPPLIER SHALL BE SUBMITTED FOUR (4) DAYS BEFORE INTENDED USE, FOR APPROVAL BY THE CITY ENGINEER. BACKFILL WITHIN THE TRENCHES SHALL BE COMPACTED TO A MINIMUM RELATIVE COMPACTION OF 95% BASED UPON THE ASTM TEST DESIGNATIONS D1557, D1556 AND D2992.
7. ALL AIR AND WATER PRESSURE TESTING OF PIPE SHALL BE WITNESSED BY THE CITY INSPECTOR. CLOSED CIRCUIT SEWER INSPECTION SHALL BE PERFORMED, REVIEWED AND ACCEPTED BY THE CITY ENGINEER PRIOR TO AND AFTER PLACING ALL AGGREGATE BASE.

STORM DRAIN

1. DRAINAGE PIPE SHALL BE AS SHOWN ON THE PLANS AND PER GENERAL NOTES "STORM DRAIN SECTION" SD–I & SD–II.
2. STORM DRAIN MANHOLES SHALL BE CONSTRUCTED TO THE CITY STANDARD SPECIFICATIONS AND STANDARD DETAIL – SD–1 & SD–2.
3. CATCH BASINS SHALL BE CONSTRUCTED TO THE CITY STANDARD SPECIFICATIONS AND STANDARD DETAILS – SD–3, SD–4, SD–5, SD–6, SD–7, SD–8, SD–9, SD–10 & SD–11.
4. STORM DRAIN PIPE SHALL BE AS FOLLOWS: REINFORCED CONCRETE PIPE (RCP) SHALL BE CLASS IV AND SHALL MEET CALTRANS STANDARD SPECIFICATIONS, SECTION 65–1.06 REQUIREMENTS FOR RUBBER GASKETED JOINTS.

SANITARY SEWER

1. SANITARY SEWER MANHOLES SHALL BE CONSTRUCTED TO THE CITY STANDARD SPECIFICATIONS AND STANDARD DETAILS S–4 AND S–5.
2. SANITARY SEWER PIPE SHALL BE POLY VINYL CHLORIDE (PVC) PLASTIC GRAVITY SEWER PIPE WITH INTEGRAL WALL BELL AND SPIGOT JOINTS FOR THE CONVEYANCE OF DOMESTIC SEWAGE. ALL SOLID WALL PIPE, FITTINGS AND COUPLINGS IN 4" THROUGH 15" INCH THICKNESS, INTEGRAL BELL GASKET JOINTS. PIPE SHALL BE MADE OF PVC PLASTIC HAVING A CELL CLASSIFICATION OF 12454A AS DEFINED IN ASTM D1784 AND SHALL HAVE A SDR OF 26 AND MINIMUM PIPE STIFFNESS OF 46 PSI ACCORDING TO ASTM D2412. PIPE, FITTINGS AND COUPLINGS SHALL BE MARKED PER ASTM REQUIREMENTS. RUBBER GASKETS SHALL BE FACTORY INSTALLED AND CONFORM TO ASTM F477.
3. PIPE SHALL BE INSTALLED IN COMPLIANCE WITH THE STANDARD SPECIFICATIONS AND THE MANUFACTURERS RECOMMENDED TRENCH CONSTRUCTION PRACTICE FOR PVC SEWER PIPE.
4. ALL SEWER LATERAL SERVICES SHALL BE 4" PVC SEWER PIPE, SDR26 PVC MIN.
5. SEWER SERVICE LATERALS SHALL BE CONSTRUCTED TO THE CITY STANDARD SPECIFICATIONS AND STANDARD DETAILS S–2 AND ALL NEW SEWER PIPE SERVICE CONNECTIONS SHALL BE INSTALLED WITH WYE FITTINGS. NEW SERVICES ON EXISTING SEWER PIPES SHALL BE CONNECTED WITH WYE SADDLES WITH STAINLESS STEEL BANDS. EXISTING SERVICES SHALL BE CONNECTED WITH APPROPRIATE ADAPTERS AND FITTINGS FOR CONNECTING VARIOUS PIPES, MATERIALS AND SIZES.
6. ALL SEWER SERVICES SHALL BE MARKED WITH A "S" ON FACE OF CURB, PER STANDARD DETAIL S–2
7. FLUSHING BRANCHES SHALL BE CONSTRUCTED TO THE CITY STANDARD SPECIFICATIONS AND STANDARD DETAILS – S–I, S–II, S–III.
8. ALL ONSITE CONSTRUCTION ACTIVITY SHALL BE LIMITED TO THE WORK HOURS SET FORTH IN THE MHMC. (BLDG)
   MHMC 8.2: WORK SHALL BE LIMITED TO THE FOLLOWING HOURS.
   7:00 AM THRU 8:00 PM MONDAY THRU FRIDAY.
   SATURDAY BY APPROVAL ONLY.
   NO WORK SHALL BE PERFORMED ON SUNDAY OR ON ANY FEDERAL HOLIDAY.
   ANY WORK DONE IN A PUBLIC RIGHT–OF–WAY ON SATURDAY SHALL BE PER PRIOR APPROVAL OF THE PUBLIC WORKS DEPARTMENT.

   WORK HOURS WITHIN THE RIGHT OF WAY ARE SUBJECT TO CHANGE AND APPROVAL BY THE CITY ENGINEER OR THEIR AUTHORIZED REPRESENTATIVE.

TREE PROTECTION

1. CONTRACTOR SHALL CONTACT TREE ARBORIST PRIOR TO CONSTRUCTION NEAR OR IN DRIPLINE OF TREES TO REMAIN. CONSTRUCTION SHALL CONFORM TO ALL REQUIREMENTS OF SAID ARBORIST.

SHEET NOTE:

IN CASE OF CONFLICT BETWEEN THE PROJECT NOTES (THIS SHEET) AND THE CITY OF MORGAN HILL REQUIRED GENERAL NOTES (SHEET 1) OR THE CITY OF MORGAN HILL STANDARD DETAILS; THE CITY REQUIRED GENERAL NOTES OR THE CITY OF MORGAN HILL STANDARD DETAILS SHALL GOVERN, OR SHALL BE RESOLVED BY THE CITY ENGINEER.

WATER SYSTEM

1. ALL WORK SHALL BE IN CONFORMANCE WITH THE FOLLOWING:
   A.APPLICABLE SECTIONS OF THE AMERICAN WATER WORKS ASSOCIATION (AWWA) STANDARDS, LATEST EDITION.
   B.STANDARD SPECIFICATIONS AND STANDARD DETAILS, LATEST EDITION, CITY OF MORGAN HILL.
2. MATERIALS – ALL PIPE, VALVES, FITTINGS, CONNECTIONS, AND APPURTENANCES THERETO SHALL CONFORM TO THE PROVISIONS OF THESE SPECIFICATIONS OR AS SPECIFICALLY SET FORTH IN THE SUPPLEMENTAL CONDITIONS. THE DEPARTMENT OF PUBLIC WORKS MAINTAINS A LISTING OF APPROVED HYDRANTS, METERS AND WATER SERVICE MATERIAL AND FITTINGS WHICH ESTABLISH A STANDARD OF MATERIAL QUALITY FOR THE CITY WATER SYSTEM. MATERIAL USED SHALL BE LIMITED TO THOSE ON THIS LISTING.

   ALL TEES, VALVES, REDUCERS, ETC. SHALL BE FLANGE BY FLANGE (FLxFL) CONNECTED. FITTING TO WATER MAIN CONNECTION MAY BE FLANGE X MECHANICAL JOINT (FLxMJ). ALL PIPES AND FITTINGS (EXCEPT VALVES) SHALL HAVE A MINIMUM WORKING PRESSURE OF ONE HUNDRED FIFTY (150) POUNDS PER SQUARE INCH (PSI) AND CONFORM TO THE FOLLOWING REQUIREMENTS:

   DUCTILE IRON PIPE – DUCTILE IRON PIPE FOR WATER SHALL BE DUCTILE IRON PIPE CLASS 50 (MINIMUM) SLIP ON, MJ, OR FLANGE. THICKER PIPE WILL BE REQUIRED AS BURIAL DEPTH DICTATES.

   DUCTILE IRON PIPE SHALL COMPLY WITH ANSI/AWWA C151/A21.51 FOR A MINIMUM WORKING PRESSURE OF 150 PSI UNLESS OTHERWISE SPECIFIED. DUCTILE IRON PIPE SHALL CONFORM TO AND BE TESTED IN ACCORDANCE WITH ASTM E8 AND E23. CASTING GRADE FOR PIPE SHALL BE 60–42–10. LAYING LENGTH SHALL BE THE MANUFACTURER'S STANDARD LENGTH, NORMALLY 18 FEET. SHORTER LENGTHS MAY BE USED WHEN REQUIRED FOR CLOSURES AND PROPER LOCATION OF SPECIAL SECTIONS.

   THE INTERIOR SURFACE OF ALL DUCTILE IRON PIPE SHALL BE CEMENT–MORTAR LINED AND SEAL COATED IN CONFORMANCE WITH ANSI/AWWA C104/A21.4 AND THE EXTERIOR SURFACE SHALL HAVE AN ASPHALTIC COATING, APPROXIMATELY 1 MIL THICK.

   FITTINGS SHALL BE PUSH–ON, MECHANICAL, OR FLANGED–TYPE DUCTILE IRON OR CAST IRON AND SHALL CONFORM TO ANSI/AWWA C111/A21.11 OR ANSI/AWWA C110/A21.10 DESIGNED FOR A WORKING PRESSURE OF 250 PSI. DUCTILE IRON CASTINGS SHALL CONFORM TO AND BE TESTED IN ACCORDANCE WITH ASTM A536, EXCEPT THE CASTING GRADE SHALL BE 70–50–05. COATING AND LINING REQUIREMENTS SHALL BE THE SAME AS SPECIFIED FOR PIPE.

   JOINTS SHALL BE PUSH–ON, MECHANICAL, OR FLANGED TYPE AND SHALL CONFORM TO ANSI/AWWA C111/A21.11 AND ANSI/AWWA C110/B16.1 AND A21.10 WITH RUBBER GASKETS UNLESS OTHERWISE SPECIFIED.
3. CAST IRON FITTINGS – CAST IRON FITTINGS SHALL BE USED ON ALL DUCTILE IRON AND POLYVINYL CHLORIDE PIPELINES AND SHALL CONFORM TO ANSI/AWWA C110/A21.10 IN MATERIAL, BODY THICKNESS, AND RADII OF CURVATURE. THE FITTINGS SHALL BE COATED WITH A CEMENT MORTAR LINING, IN ACCORDANCE WITH ANSI/AWWA C104/A21.4.

   CAST IRON FITTINGS SHALL BE CLASS D FITTINGS CONFORMING TO ASTM DESIGNATION 126 AND SHALL BE ONE HUNDRED TWENTY–FIVE (125) PSI STANDARD. ALL VALVES AND FITTINGS SHALL ALL BE FLANGED.
4. VALVES – VALVES SHALL BE FURNISHED AND INSTALLED PER CITY STANDARD DETAIL NO. W–12.
5. GASKETS – GASKETS FOR FLANGED JOINTS SHALL BE EITHER RING OR FULL FACE, ONE–EIGHTH (1/8) INCH RUBBER GASKETS, CONFORMING TO THE DIMENSIONS IN ANSI/AWWA C115/A21.15, APPENDIX A.
6. THRUST BLOCKS – THRUST BLOCKS SHALL CONFORM TO THE STANDARD DRAWINGS W–17, W–18, W–19. CONCRETE FOR THRUST BLOCKS SHALL BE CLASS B WITH ONE AND ONE–HALF (1–1/2) INCH MAX. SIZE AGGREGATE IN ACCORDANCE WITH SECTION 90 OF THE STANDARD SPECIFICATIONS. EBAA IRON WORKS MEGA LUG MJ MAY BE SUBSTITUTED FOR TRUST BLOCKS.

   CONTRACTOR SHALL SUBMIT RESTRAINED LENGTH CALCS. FOR APPROVAL BY THE CITY ENGINEER PRIOR TO USE OF MEGA–LUG RESTRAITS.
7. FIRE HYDRANTS ASSEMBLIES – FIRE HYDRANTS SHALL BE FURNISHED AND INSTALLED PER CITY STANDARD DETAILS W–13, W–16, W–17.
8. SERVICE LINES – SERVICE LINES UP TO AND INCLUDING METER CONNECTION SHALL BE AS DETAILED IN THE STANDARD DRAWINGS W–1, AS APPLICABLE FOR THE SERVICE INTENDED AND WITH THE AWWA STANDARD C800. FINAL LOCATION OF WATER SERVICES SHALL BE DETERMINED BY THE PROJECT ENGINEER PRIOR TO CONSTRUCTION.

   ALL WATER SERVICES SHALL BE MARKED WITH A "W" ON FACE OF CURB, PER CITY STANDARD DETAIL W–I

   MATERIALS – ALL WATER SERVICE LINES SHALL BE 1 INCH IN DIAMETER UNLESS OTHERWISE SPECIFIED. WATER SERVICE PIPE MATERIAL UP TO AND INCLUDING 2 INCHES SHALL BE COPPER WATER TUBING, "TYPE K", SOFT TEMPERED, MEETING ASTM B88 AND ANSI/AWWA C800. SERVICES TWO (2) INCHES AND LARGER SHALL BE CONSIDERED AS A SPECIAL CONDITION AND WILL REQUIRE THE PRIOR APPROVAL OF THE CITY ENGINEER.
9. WATER METERS – WATER METERS SHALL BE OBTAINED FROM THE CITY OF MORGAN HILL AND INSTALLED IN ACCORDANCE WITH STANDARD DETAILS W–1, W–2, W–3.
10. TAPS INTO DUCTILE IRON PIPE SHALL BE BY MACHINE. CONTRACTOR SHALL PERFORM ALL SERVICE TAPS AS THE CITY DOES NOT PROVIDE THIS SERVICE. HOT TAPS TO MAIN LINES WILL BE ALLOWED ONLY UPON APPROVAL OF THE CITY ENGINEER. TAPPING SLEEVES MAY ONLY BE USED WHERE A WATER MAIN IS AT LEAST TWO NOMINAL SIZES LARGER THAN THE PROPOSED BRANCH. LESS THAN TWO NOMINAL SIZE DIFFERENTIAL MAY BE ALLOWED UPON CITY ENGINEER APPROVAL, BUT WILL BE ALLOWED ON WATER MAINS THAT ARE NOT DUCTILE IRON.

GRADING AND PAVING NOTES

1. ALL WORK SHALL BE IN CONFORMANCE WITH THE FOLLOWING:
   A.APPLICABLE SECTIONS OF THE CALTRANS STANDARD SPECIFICATIONS, LATEST EDITION.
   B.STANDARD SPECIFICATIONS AND STANDARD DETAILS, LATEST EDITION OF THE CITY OF MORGAN HILL.
2. CONTRACTOR SHALL NOTIFY THE CITY 2 WORKING DAYS BEFORE STARTING GRADING WORK.
3. WORK SHALL CONSIST OF ALL EARTHWORK RELATED TO THE PROJECT; ALL CLEARING, GRUBBING, STRIPPING, ROUGH GRADING, PREPARATION OF FOUNDATION AND MATERIALS FOR RECEIVING FILLS, EXCAVATION, IMPORT AND/OR EXPORT OF FILL, PROCESSING, PLACEMENT AND COMPACTION OF FILL MATERIALS, PLACEMENT OF SUBSURFACE DRAINS, PLACEMENT OF AGGREGATE BASE MATERIAL, ASPHALT CONCRETE (AC) AND/OR PORTLAND CEMENT CONCRETE (PCC) PAVING, AND ALL SUBSIDIARY WORK NECESSARY TO COMPLETE THE GRADING AND PAVING TO CONFORM TO THE LINES, GRADES, AND SLOPES, AS SHOWN ON THESE PLANS.
4. SITE CONDITIONS: THE CONTRACTOR SHALL VISIT THE SITE, EXAMINE AND NOTE ALL CONDITIONS AS TO THE CHARACTER AND EXTENT OF WORK INVOLVED.
5. CONTRACTOR SHALL OBTAIN ALL NECESSARY PERMITS OR CERTIFICATES AS REQUIRED BY THE CITY.
6. ALL EARTHWORK SHALL BE CONSTRUCTED PER THE GRADING SPECIFICATIONS OF CALTRANS STANDARDS. ALL SOIL SHALL BE COMPACTED TO A MINIMUM OF 90% RELATIVE COMPACTION, AS REQUIRED BY THE ASTM TEST DESIGNATIONS D1557, D1556, AND D2992, EXCEPT THE PAVEMENT SUB–GRADE. THE UPPER 8" LAYER OF SUBGRADE SHALL BE COMPACTED TO 95% RELATIVE COMPACTION, THE EXACT DEPTH SHALL BE DETERMINED BY THE GEOTECHNICAL ENGINEER AND/OR AS SHOWN ON THESE PLANS. SUBEXCAVATION BELOW EXISTING GRADE SHALL BE REQUIRED WITHIN AREAS WHICH ARE TO SUPPORT BUILDINGS FOUNDATIONS, CONCRETE SLABS ON GRADE, PAVEMENTS OR STRUCTURAL FILL.
7. BACKFILL FOR UNDERGROUND UTILITIES PLACED ON THE SITE SHALL CONSIST OF CLEAN, IMPORTED SAND MATERIAL (MINIMUM S.E.= 30) TO A MINIMUM OF 12 INCHES OVER THE CONDUIT, UNLESS SHOWN OTHERWISE ON THE PLAN.

   BACKFILL FOR UNDERGROUND UTILITIES PLACED IN EXISTING PUBLIC STREETS SHALL BE PER CITY STD. DRAWINGS U–2 AND U–3.

   A SAMPLE SHALL BE SUBMITTED FOUR (4) DAYS BEFORE INTENDED USE, FOR REVIEW BY THE ENGINEER. BACKFILL WITHIN THE UTILITY TRENCHES SHALL BE COMPACTED TO A MINIMUM RELATIVE COMPACTION OF 90% OR 95% DEPENDING UPON THE LOCATION AND BASED UPON THE ASTM TEST DESIGNATIONS D1557, D1556 AND D2992.
8. AT ALL TIMES DURING CONSTRUCTION AND UNTIL FINAL COMPLETION, THE CONTRACTOR, WHEN HE OR HIS SUBCONTRACTORS ARE OPERATING EQUIPMENT ON THE SITE, SHALL PREVENT THE FORMATION OF AN AIRBORNE DUST NUISANCE BY WATERING AND/OR TREATING THE SITE OF THE WORK IN SUCH A MANNER THAT WILL CONFINE DUST PARTICLES TO THE IMMEDIATE SURFACE OF THE WORK. THE CONTRACTOR WILL BE RESPONSIBLE FOR ANY DAMAGE DONE BY THE DUST FROM HIS OR HER SUBCONTRACTOR'S ACTIVITIES IN PERFORMING THE WORK UNDER THIS CONTRACT. THE PRICES FOR THE VARIOUS ITEMS OF WORK SHALL COVER THIS DUST CONTROL.
9. ALL AGGREGATE SUBBASE AND AGGREGATE BASE MATERIAL, AND THE HANDLING AND PLACEMENT THEREOF, SHALL BE IN CONFORMANCE WITH CALTRANS STANDARD SPECIFICATIONS. AGGREGATE SUBBASE SHALL BE CLASS 1. AGGREGATE BASE SHALL BE CLASS 2. COMPACT TO A MINIMUM OF 95% RELATIVE COMPACTION.
10. A PRIME COAT OF LIQUID ASPHALT, GRADE MC–70, CONFORMING TO CALTRANS STANDARD SPECIFICATIONS, SHALL BE APPLIED AT THE RATE OF 0.25+ GALLONS PER SQUARE YARD TO THE SURFACE OF AGGREGATE BASE PRIOR TO PLACEMENT OF ASPHALT CONCRETE.
11. ASPHALT CONCRETE (AC) SHALL CONSIST OF A MIXTURE OF SAND, MINERAL AGGREGATE, AND LIQUID ASPHALT, DESIGNATED AS CALTRANS STANDARD SPECIFICATIONS, TYPE "B", 1/2" MAXIMUM, MEDIUM GRADING. MIXED IN SUCH PROPORTIONS THAT THE PERCENTAGE BY WEIGHT WILL BE WITHIN:

SIEVE SIZES	OPERATING RANGE (PERCENTAGE PASSING)
3/4"	100%
1/2"	95–100%
3/8"	80–95%
NO. 4	59–66%
NO. 8	43–49%
NO. 30	22–27%
NO. 200	3– 8%

   PLUS PAVING ASPHALT, VISCOSITY GRADE AR4000 AT 5 TO 6–1/2% OF THE COMBINED DRY AGGREGATES.

   ACTUAL MIX DESIGN SHALL BE SUBMITTED TO THE CITY ENGINEER FOR APPROVAL AT LEAST 10 WORKING DAYS PRIOR TO STARTING ANY PAVING WORK.
12. PAINT BINDER OF ASPHALT EMULSION, GRADE CRS–1, CONFORMING TO CALTRANS STANDARD SPECIFICATIONS, SHALL BE APPLIED TO EXISTING ASPHALT CONCRETE SURFACES AND VERTICAL CONCRETE SURFACES TO RECEIVE ASPHALT CONCRETE.
13. FOG SEAL, GRADE CSS–1H, CONFORMING TO CALTRANS STANDARD SPECIFICATION, SHALL BE APPLIED AT THE RATE OF 0.10+ GALLONS PER SQUARE YARD TO THE SURFACE OF ALL NEW ASPHALT CONCRETE PAVEMENT, PER CSS SECTION 37
14. MATERIALS AND INSTALLATION OF PORTLAND CEMENT CONCRETE CURB, GUTTER AND SIDEWALK SHALL CONFORM TO THE APPLICABLE SECTIONS OF THE CALTRANS STANDARD SPECIFICATIONS AND THE CITY STANDARD SPECIFICATIONS AND DETAILS.
15. EXISTING A.C. SURFACE SHALL BE SAW CUT TO A NEAT STRAIGHT LINE PARALLEL WITH THE STREET CENTERLINE AND THE EXPOSED EDGE SHALL BE TACKED WITH EMULSION PRIOR TO PAVING. WHEN TRENCHING THROUGH CURB, GUTTER AND SIDEWALK, A SAW CUT WILL BE USED. WHERE EXISTING PAVEMENT IS TRENCHED, REPLACE WITH 4" A.C. AND 12" A.B. MINIMUM OR MATCH THE EXISTING SECTION, WHICHEVER IS GREATER. THE EXPOSED BASE MATERIAL SHALL BE GRADED, RECOMPACTED AND RESEALED PRIOR TO REPAVING.
16. ALL VALVE BOXES AND MANHOLES TO BE SET FLUSH WITH FINISHED GRADE, UNLESS OTHERWISE NOTED.
17. APPROVAL OF THE CITY ENGINEER OR HIS AUTHORIZED REPRESENTATIVE, IS REQUIRED ON COMPLETED WORK PRIOR TO: (A) PLACING OF ANY CONCRETE, (B) PLACING OF AGGREGATE BASE, (C) PLACING OF ASPHALTIC CONCRETE, (D) BACK FILLING TRENCHES FOR PIPE. WORK DONE WITHOUT SUCH APPROVAL SHALL BE AT THE CONTRACTOR'S RISK. SUCH APPROVAL SHALL NOT RELIEVE THE CONTRACTOR FROM THE RESPONSIBILITY OF PERFORMING THE WORK IN AN ACCEPTABLE MANNER.
18. PRIOR TO PERFORMING THE FINAL GRADING AND SUB–GRADE COMPACTION FOR THE PAVED AREAS, THE CONTRACTOR SHALL REVIEW THE PROPOSED GRADES WITH THE CITY ENGINEER AND COMPLY WITH HIS REQUESTS FOR ANY MINOR GRADE CHANGES.
19. PAVEMENT CRACKS SHALL BE CLEANED WITH A STIFF BRISTLED BROOM AND COMPRESSED AIR, TO REMOVE DIRT AND ORGANIC MATERIAL, PRIOR TO APPLYING THE CRACK SEALER.
20. PRIOR TO CHIP SEAL PLACEMENT, PAVEMENT SURFACES SHALL BE CLEANED OF ANY DEBRIS, OIL AND GREASE SPOTS. AFTER CLEANING AND PRIOR TO CHIP SEAL PLACEMENT, OIL AND GREASE SPOTS SHALL BE SEALED WITH ASPHALTIC EMULSION CSS–1H, 50% ASPHALTIC EMULSION AND 50% WATER, APPLIED AT THE RATE OF 0.05 (AVERAGE) GAL. PER SQUARE YARD, OR AS DIRECTED BY THE ENGINEER.
21. PAVEMENT MARKINGS AND LEGENDS (WARNING LEGENDS, TURN ARROWS, AND SUCH OTHER MARKINGS SHOWN ON THE PLANS) SHALL BE PAINTED WITH THE USE OF STENCILS. THE CITY ENGINEER SHALL APPROVE THE STENCIL DETAILS PRIOR TO USE.
22. PAVEMENT MARKERS SHALL CONFORM TO SECTION 85 OF THE CALTRANS STANDARD SPECIFICATIONS AND THE SUPPLEMENTARY CONDITIONS.
23. WHEELCHAIR ACCESS RAMPS SHALL BE PER CITY STANDARD DETAIL A–1, A–2. (NOTE THAT THE RAMP SHALL BE 7'–0" LONG WITH A 4'–0" LANDING PER TITLE 24, CAC AND THE 12" TACTILE STRIP [GROOVING] SHALL BE PLACED AT THE GRADE BREAKS PER THE STANDARD DETAIL.)
24. ALL RETAINING WALLS 12" OR HIGHER SHALL BE CONCRETE GRAVITY BLOCK OR CMU.
25. ALL DAMAGED CURB, GUTTER AND PAVEMENT IS SUBJECT TO REMOVAL AND REPLACEMENT ACROSS THE PROPERTY FRONTAGE UPON THE EVALUATION OF THE SENIOR PUBLIC WORKS INSPECTOR. DAMAGED PAVEMENT ACROSS PROPERTY FRONTAGE SUBJECT TO GRIND AND OVERLAY.

LEGEND

EXISTING — PROPOSED

- 450 / 454 CONTOUR ELEVATION
- (W) WATER MAIN
- (SD) / (length) LF (size) SD @ S=(grade) STORM DRAIN
- (SS) / (length) LF (size) SS @ S=(grade) SANITARY SEWER
- ELECTROLIER
- FLOW DIRECTION
- DROP INLET
- MANHOLE
- CURB INLET
- WATER METER SERVICE
- FIRE HYDRANT
- WATER VALVE
- SIDEWALK
- VERTICAL CURB
- CURB & GUTTER
- JOINT TRENCH
- RETAINING WALL
- DRAINAGE SWALE
- SS SEWER LATERAL
- TREE TO BE REMOVED
- MON MONUMENT
- ROCK RIP–RAP

ABBREVIATIONS

AC	ASPHALT CONCRETE	EP	EDGE OF PAVEMENT	P.S.E.	PUBLIC SERVICE EASEMENT
AB	AGGREGATE BASE	ER	END OF RETURN	P.S.D.E.	PRIVATE STORM DRAIN EASEMENT
AD	AREA DRAIN	ESMT	EASEMENT	P.S.S.E.	PRIVATE SANITARY SEWER EASEMENT
AGG	AGGREGATE	(E)	EXISTING	P.U.E.	PUBLIC UTILITY EASEMENT
BC	BEGINNING OF CURVE	EX.	EXISTING	PVI	POINT OF VERTICAL INTERSECTION
BPD	BACKFLOW PREVENTER DEVICE	FF	FINISH FLOOR	PVC	POLYVINYL CHLORIDE PIPE
BLDG	BUILDING	FG	FINISH GRADE	R	RADIUS
BOC	BACK OF CURB	FH	FIRE HYDRANT	RCP	REINFORCED CONCRETE PIPE
BO	BLOW OFF		FLOWLINE	R/W	RIGHT OF WAY
BOT	BOTTOM	FOC	FACE OF CURB	RWL	RAINWATER LEADER
BOW	BACK OF WALK		GAS LINE	S	SLOPE
BW	BOTTOM OF WALL	GM	GAS METER	SD	STORM DRAIN PIPE
BWF	BARBWIRE FENCE	GB	GRADE BREAK	SS	SANITARY SEWER PIPE
CATV	CABLE TELEVISION	CUY	GUY WIRE FOR POLE	STM	STORM DRAIN MANHOLE
CB	CATCH BASIN	GV	GATE VALVE	SS MH	SANITARY SEWER MANHOLE
C&G	CURB & GUTTER	HDPE	HIGH DENSITY POLYETHYLENE	SP	SERVICE POLE
CI	CURB INLET	HMA	HOT MIX ASPHALT	STD	STANDARD
CL	CENTERLINE	HP	HIGH POINT	SQ	SQUARE
CMP	CORRUGATED METAL PIPE	INV	INVERT OF PIPE	SW	SIDEWALK
CMU	CONCRETE MASONRY UNIT	IP	IRON PIPE	T	TELEPHONE LINE
CO	CLEAN OUT	JP	JOINT POLE	TBM	TEMPORARY BENCHMARK
CONC	CONCRETE	JT	JOINT TRENCH	TC	TOP OF CURB
CONST	CONSTRUCTION	LF	LINEAR FEET	TCM	TREATMENT CONTROL MEASURES
DDCV	DOUBLE DETECTOR CHECK VALVE ASSEMBLY	LP	LOW POINT	TFC	TOP FACE OF CURB
		MAX	MAXIMUM	TG	TOP OF GRATE
DI	DROP INLET	MIN	MINIMUM	TOB	TOP OF BANK
DIP	DUCTILE IRON PIPE	N.I.C.	NOT IN CONTRACT	TOE	TOE OF BANK
DMA	DRAINAGE MANAGEMENT AREA	(N)	NEW	TW	TOP OF WALL
DS	DOWNSPOUT	OHU	OVERHEAD UTILITY	TYP	TYPICAL
DWY	DRIVEWAY	(P)	PROPOSED	W	WATER LINE
E	ELECTRIC LINE	PB	PULL BOX	WM	WATER METER
EC	END OF CURVE	PCC	PORTLAND CONCRETE CEMENT	WV	WATER VALVE
EG	EXISTING GRADE	PL	PROPERTY LINE		
ELEV	ELEVATION	PRC	POINT REVERSE CURVE		

NO.	DESCRIPTION	DATE	BY

p:\proj\ Revisions

Work Accepted: Inspector:

As–Built Corrections

By: ________ Date: ____

Supervised by: Amanda Joy Musy–Verdel
Registered Civil Engineer
RCE no. 69278
signature 12/4/24 date

REGISTERED PROFESSIONAL ENGINEER — AMANDA JOY MUSY–VERDEL — NO. 69278 — CIVIL — STATE OF CALIFORNIA

HANNA-BRUNETTI EST. 1910
CIVIL ENGINEERS • LAND SURVEYORS
CONSTRUCTION MANAGERS
7651 EIGLEBERRY STREET • GILROY • 95020 • CALIFORNIA
OFFICE (408) 842-2173
EMAIL: ENGINEERING @ HANNABRUNETTI.COM

DRAWN | DESIGN
CHECKED | DATE
APPROVED | DATE
Scott C Creer – CITY ENGINEER
R.C.E. # 58879

HOR 1"=20'
VERT
AS BUILT
JOB NUMBER 14018

City of Morgan Hill
Public Works Department
17575 Peak Avenue, Morgan Hill - California - 95037
(408) 776-6480 - fax (408) 779-7236
CITY OF MORGAN HILL

Project Notes-Legend-Abbreviations
215 Tennant Avenue - apn 817-04-059

City File no. PWPR2021–0006
PRINT DATE 5/25/2023
SHEET NUMBER C.2 of 15

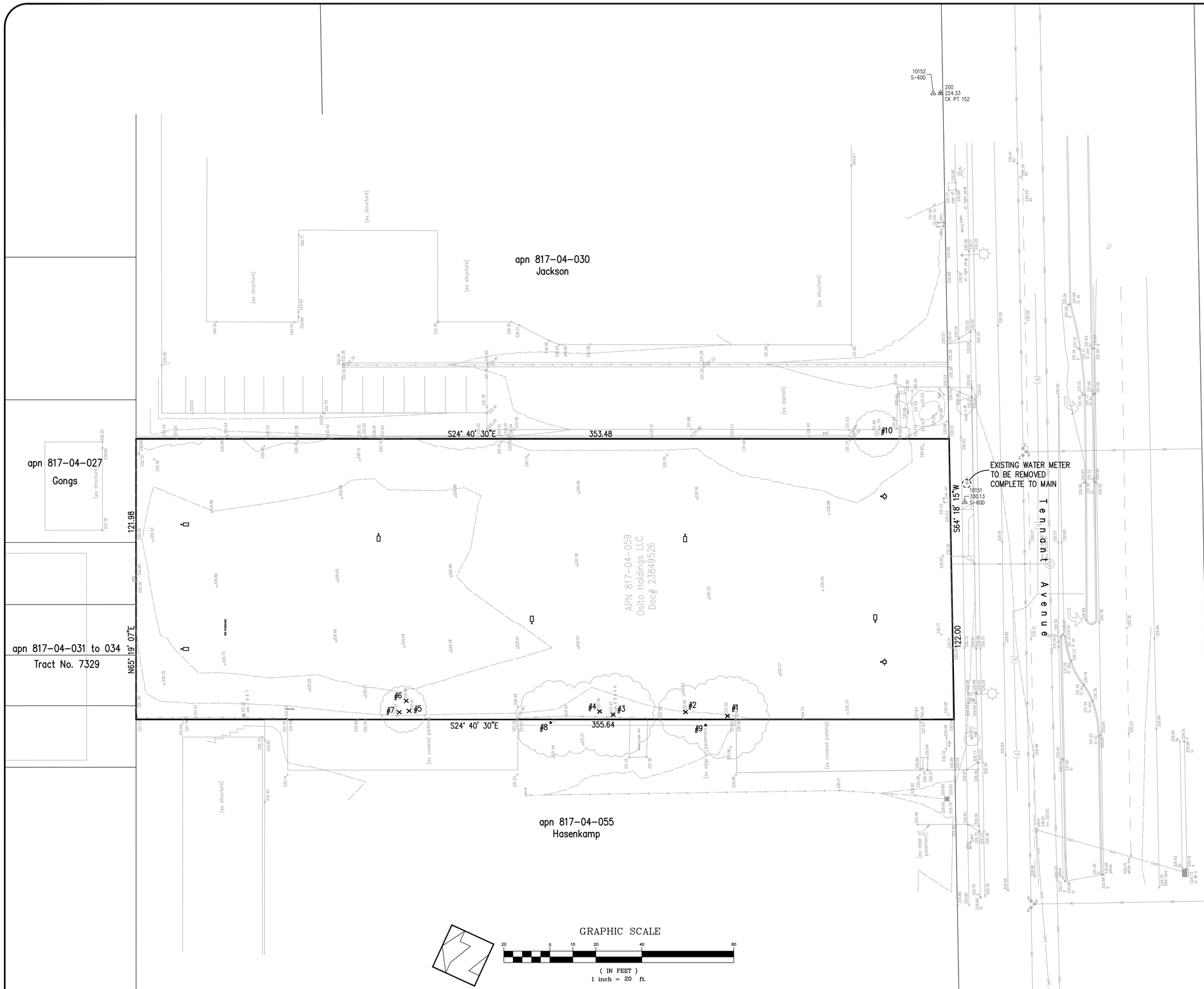

TREE LIST:

TREE NUMBER	NAME	TRUNK DIAMETER	
#1	COAST LIVE OAK	13/12/12/6	REMOVE
#2	COAST LIVE OAK	10	REMOVE
#3	COAST LIVE OAK	12/10/8/8/8/7/3	REMOVE
#4	COAST LIVE OAK	16/12/8	REMOVE
#5	COAST LIVE OAK	8	REMOVE
#6	COAST LIVE OAK	7	REMOVE
#7	COAST LIVE OAK	8	REMOVE
#8	BOTTLE TREE	18	REMAIN (ON ADJACENT PROPERTY)
#9	BOTTLE TREE	14	REMAIN (ON ADJACENT PROPERTY)
#10	RED IRONBARK	26	REMAIN (ON ADJACENT PROPERTY)

NO.	DESCRIPTION	DATE	BY

p:\proj\ Revisions

Work Accepted: Inspector:

As-Built Corrections

By: Date:

Supervised by:
Amanda Joy Musy-Verdel
Registered Civil Engineer
RCE no. 69278

signature 12/4/24 date

REGISTERED PROFESSIONAL ENGINEER AMANDA JOY MUSY-VERDEL NO. 69278 CIVIL STATE OF CALIFORNIA

HANNA-BRUNETTI
EST. 1910
CIVIL ENGINEERS • LAND SURVEYORS
CONSTRUCTION MANAGERS
7651 EIGLEBERRY STREET • GILROY • 95020 • CALIFORNIA
OFFICE (408) 842-2173 • FAX (408) 842-3662
EMAIL: ENGINEERING @ HANNABRUNETTI.COM

DRAWN	DESIGN	HOR 1"=20'
CHECKED	DATE	VERT
APPROVED	DATE	AS BUILT
Scott C Creer – CITY ENGINEER R.C.E. # 58879		JOB NUMBER 14018

CITY OF MORGAN HILL

City of Morgan Hill
Public Works Department
17575 Peak Avenue, Morgan Hill - California - 95037
(408) 776-6480 - fax (408) 779-7236

Existing Topography Plan
215 Tennant Avenue - apn 817-04-059

City File no. PWPR2021-0006
PRINT DATE 5/25/2023
SHEET NUMBER C.3 of 15

TRACT NO. 10577

BEING A PORTION OF LOTS 6 AND 7,
'MAP OF THE HENRI MARTENS SUBDIVISION NO. 2'
FILED IN BOOK 'P' OF MAPS, AT PAGE 39

LYING WITHIN THE CITY OF MORGAN HILL
COUNTY OF SANTA CLARA, STATE OF CALIFORNIA

FOR CONDOMINIUM PURPOSES (16 RESIDENTIAL UNITS)

APRIL, 2023 SCALE: 1" = 30'

HANNA & BRUNETTI - CIVIL ENGINEERS AND LAND SURVEYORS
7651 EIGLEBERRY STREET - GILROY, CA. 95020 - 408 842-2173

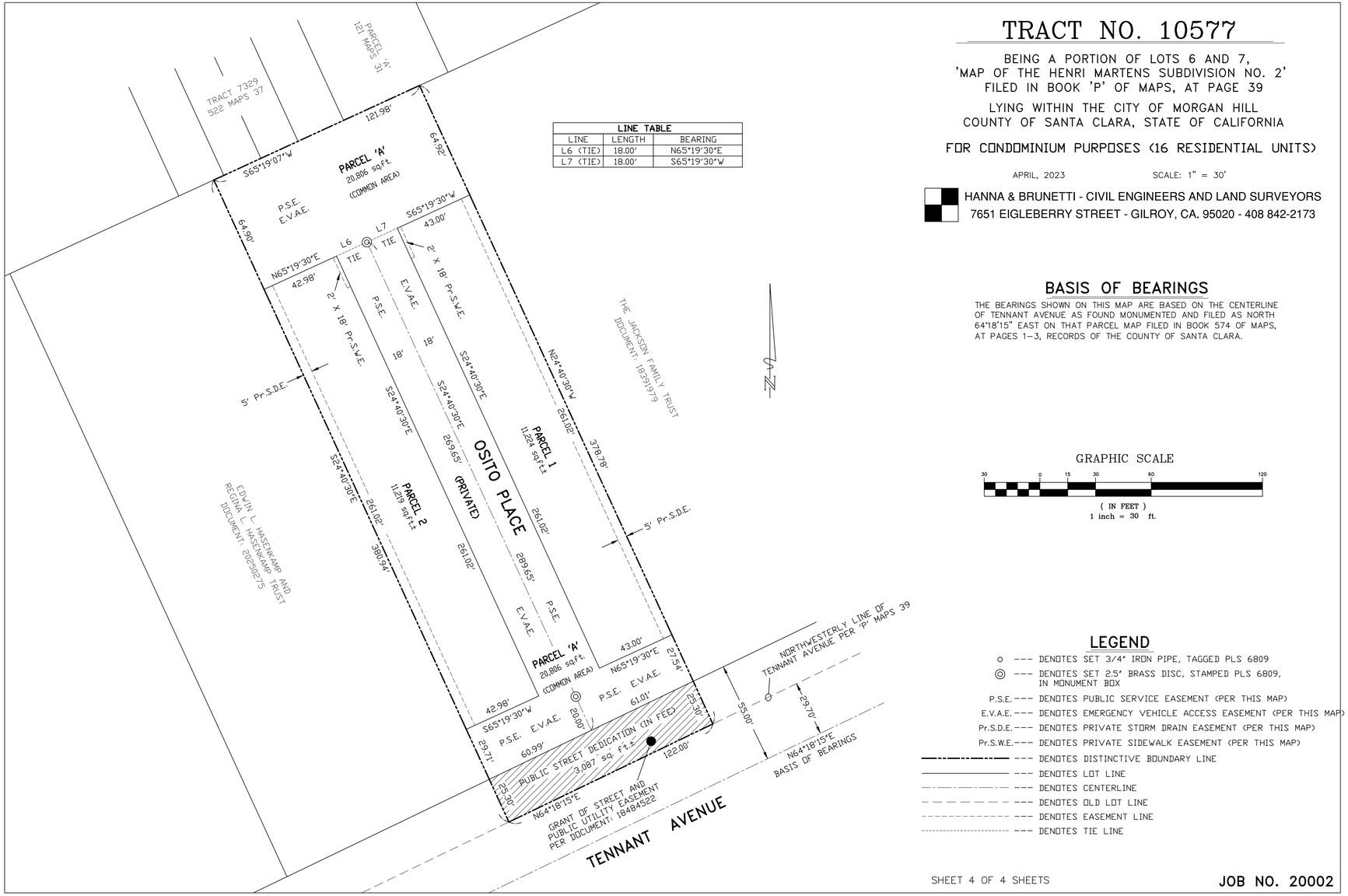

BASIS OF BEARINGS

THE BEARINGS SHOWN ON THIS MAP ARE BASED ON THE CENTERLINE OF TENNANT AVENUE AS FOUND MONUMENTED AND FILED AS NORTH 64°18'15" EAST ON THAT PARCEL MAP FILED IN BOOK 574 OF MAPS, AT PAGES 1–3, RECORDS OF THE COUNTY OF SANTA CLARA.

GRAPHIC SCALE

30 0 15 30 60 120

(IN FEET)
1 inch = 30 ft.

LEGEND

- o --- DENOTES SET 3/4" IRON PIPE, TAGGED PLS 6809
- ◎ --- DENOTES SET 2.5" BRASS DISC, STAMPED PLS 6809, IN MONUMENT BOX
- P.S.E. --- DENOTES PUBLIC SERVICE EASEMENT (PER THIS MAP)
- E.V.A.E. --- DENOTES EMERGENCY VEHICLE ACCESS EASEMENT (PER THIS MAP)
- Pr.S.D.E. --- DENOTES PRIVATE STORM DRAIN EASEMENT (PER THIS MAP)
- Pr.S.W.E. --- DENOTES PRIVATE SIDEWALK EASEMENT (PER THIS MAP)
- DENOTES DISTINCTIVE BOUNDARY LINE
- DENOTES LOT LINE
- DENOTES CENTERLINE
- DENOTES OLD LOT LINE
- DENOTES EASEMENT LINE
- DENOTES TIE LINE

SHEET 4 OF 4 SHEETS

JOB NO. 20002

NO.	DESCRIPTION	DATE	BY

p:\proj\ Revisions

Work Accepted: Inspector:

As-Built Corrections

By: Date:

Supervised by:
Amanda Joy Musy-Verdel
Registered Civil Engineer
RCE no. 69278
signature 12/4/24 date

REGISTERED PROFESSIONAL ENGINEER * AMANDA JOY MUSY-VERDEL * NO. 69278 * CIVIL * STATE OF CALIFORNIA *

HANNA-BRUNETTI
EST. 1910
CIVIL ENGINEERS • LAND SURVEYORS
CONSTRUCTION MANAGERS
7651 EIGLEBERRY STREET • GILROY • 95020 • CALIFORNIA
OFFICE (408) 842-2173 • FAX (408) 842-3662
EMAIL: ENGINEERING @ HANNABRUNETTI.COM

DRAWN	DESIGN	HOR. 1"=30'
CHECKED	DATE	VERT
APPROVED	DATE	AS BUILT
Scott C Greer — CITY ENGINEER R.C.E. # 58879		JOB NUMBER 20002

CITY OF MORGAN HILL

City of Morgan Hill
Public Works Department
17575 Peak Avenue, Morgan Hill - California - 95037
(408) 776-6480 - fax (408) 779-7236

Site Plan
215 Tennant Avenue - APN 817-04-059
16 Residential Condominiums

City File no. PWPR2021-0006
PRINT DATE 5/25/2023
SHEET NUMBER C.4 of 15

HB JOB NO. 20002

MATCH LINE — SEE SHEET C.6

DI (V12) TG 330.5 INV 326.73

EXISTING MASONRY WALL ALONG PROPERTY LINE

DI (V1) TG 330.5 INV 326.91

DI (V1) TG 330.5 INV 327.07

S24° 40' 30"E 353.48

DI (V1) TG 330.5 INV 327.23

DI (V1) TG 330.5 INV 327.4

DI (V1) TG 330.5 INV 327.3

FG 331.28

4" CONC OVER 4" GRAVEL

FG 331.36 FG 331.36

FG 331.33

TC 331.13 AC 330.63

TC 331.40 AC 330.90

TC 330.76 FL 330.26

56 LF 12" RCP @ S=0.02 CONNECT INTO 'FIRST DEFENSE' UNIT

TC 330.65 FL 330.15

TC 330.63 FL 330.13

HOUSE FF 331.41 PAD 330.58

FG 330.93

GARAGE FF 330.91 PAD 329.9

PAD GRADES PER NOTE 1 THIS SHEET (TYP ALL LOTS)

HOUSE FF 331.41 PAD 330.58

GARAGE FF 330.91 PAD 329.9

FG 330.91

FG 330.71

DI (V1) TG 330.5 INV 327.7

FG 331.60

DECOMPOSED GRANITE PATH

TURF

TC 331.47 AC 330.97

AC 330.70

TC 330.55 FL 330.05

SEE SHEETS C.12 & C.13 FOR STORM CHAMBER DETAILS

RH-3'

TC 330.82 FL 330.32

3+32.66 TC 330.77 FL 330.27 BEGIN CURB

3+28.14 TD 330.58 FL 330.25 END MOD CURB

TC 330.30 FL 329.97

DROP INLET INV 325.93

TC 330.49 FL 330.16

DI (V1) TG 330.5 INV 327.9

FG 331.40

DECOMPOSED GRANITE PATH

3+88.16 TC 331.55 AC 331.05

AC 330.78

'FIRST DEFENSE' UNIT RIM 320.5± INV 325.6

3+45.16 AC 330.46 GRADE BREAK

SD MH RIM 330.6± INV 325.58

2+73.10 AC 330.10 GRADE BREAK

2+35.64 AC 330.29 GRADE BREAK

TC 331.54 AC 331.04

SEE NOTE 4 ON THIS SHEET

AC 330.80

3+32.63 TC 330.77 FL 330.27 BEGIN CURB

3+27.66 TD 330.58 FL 330.25 END MOD CURB

TC 330.82 AC 330.32

TC 330.55 FL 330.05

TC 330.57 FL 330.07

N65° 19' 07"E

DI (V1) TG 330.7 INV 327.5

NO PARKING

PROVIDE STRIPING & SIGNAGE 11.0' SEE NOTE 2 (THIS SHEET)

56 LF 12" RCP @ S=0.015 CONNECT INTO 'FIRST DEFENSE' UNIT

TC 331.32 AC 330.82

TC 331.29 AC 330.79

TC 331.11 AC 330.61

TC 331.31 FL 330.81

TC 330.75 FL 330.25

PAD GRADES PER NOTE 1 THIS SHEET (TYP ALL LOTS)

HOUSE FF 331.41 PAD 330.58

GARAGE FF 330.91 PAD 329.9

FG 330.71

FG 331.27 FG 331.47

TC 331.50 AC 331.00

TC 331.35 AC 330.85

PLANTER

PICNIC TABLE

GRILL

CONCRETE SURFACE

PLANTER

FG 331.27 FG 331.27

TC 331.25 AC 330.75

DI (V12) TG 330.25 INV 326.5

DI (V1) TG 330.7 INV 327.14

DI (V1) TG 330.6 INV 326.80

DI (V1) TG 330.5 INV 326.95

DI (V1) TG 330.5 INV 327.12

S24° 40' 30"E 355.64

DI (V1) TG 330.5 INV 327.29

DI (V1) TG 330.5 INV 327.45

MATCH LINE — SEE SHEET C.6

NOTE:
SEE LANDSCAPE PLANS SHEET L-1 THRU L-4 FOR FINAL LAYOUT AND DESIGN BY AITKEN ASSOCIATES LANDSCAPE ARCHITECTS JOB ID: TENNANT

GRAPHIC SCALE
10 0 5 10 20 40
(IN FEET)
1 inch = 10 ft.

CONSTRUCTION NOTES:

Ⓐ CONSTRUCT CITY STD "TYPE 2" CONCRETE VERTICAL CURB PER CITY DWG NO. A-3

Ⓑ CONSTRUCT CITY STD "TYPE 1" CONCRETE CURB & GUTTER PER CITY DWG NO. A-3

Ⓒ CONSTRUCT MODIFIED CURB PER DETAIL; SEE SHEET C.5

Ⓓ CONSTRUCT HANDICAP RAMP AND INSTALL DETECTABLE WARNINGS PER CALIFORNIA BUILDING CODE 11B-705.1.2.2.2 (A)

Ⓔ CONSTRUCT HANDICAP RAMP AND INSTALL DETECTABLE WARNINGS PER CALIFORNIA BUILDING CODE 11B-705.1.2.2.2 (A)

Ⓕ CONSTRUCT SIDEWALK PER CITY DWG NO. A-4

Ⓖ PROVIDE TRANSITION FROM CURB & GUTTER TO MODIFIED CURB

NOTES:

1. CONTRACTOR TO VERIFY THICKNESS OF FOUNDATION AND PAD GRADE WITH GEOTECHNICAL ENGINEER AND STRUCTURAL/FOUNDATION PLANS AND/OR ENGINEERS.
2. PARKING STALLS SHALL BE UNASSIGNED. ACCESSIBLE PARKING STALLS, SIGNS, AND STRIPING PER CALIFORNIA BUILDING CODE 1109A.5 & 1109A.8.8.
3. PRIVATE CURB INLET STENCILING: ALL CURB INLETS SHALL HAVE THERMOPLASTIC STENCILING: "NO DUMPING, FLOWS TO CREEK/RIVER."
4. THE WORDS "NO PARKING" SHALL BE PAINTED ON THE GROUND WITHIN EACH LOADING AND UNLOADING ACCESS AISLE. THIS NOTICE SHALL BE PAINTED IN WHITE LETTERS NO LESS THAN 12-INCHES HIGH AND LOCATED SO THAT IT IS VISIBLE FROM THE ADJACENT VEHICULAR WAY. (1109A.8.6 CBC)

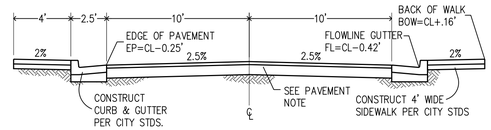

PRIVATE STREET SECTION

WITH STANDARD CITY CURB AND GUTTER
SCALE: 1"=5'

PAVEMENT NOTE:

PAVEMENT SECTION 4" AC OVER 10" CLASS II AGG. BASE OVER 12" OF 95% MIN REL COMPACTED SUB GRADE PER GEOTECHNICAL SOILS REPORT PROJECT NO. D071.G DATED MAY 3, 2021. (QUANTUM GEOTECHNICAL, INC.)

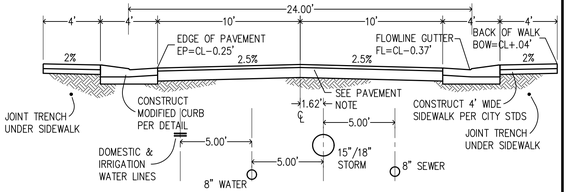

PRIVATE STREET SECTION

WITH MODIFIED CURB
SCALE: 1"=5'

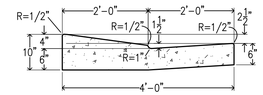

MODIFIED CURB

NO SCALE

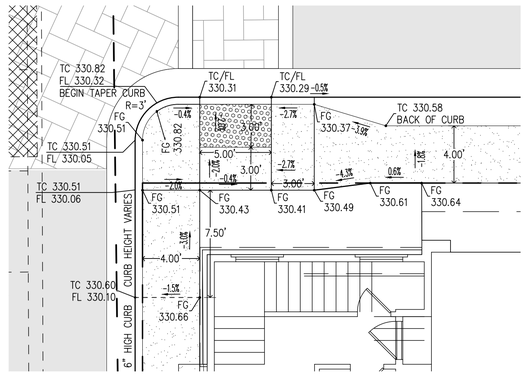

(D) HANDICAP RAMP DETAIL

SCALE: 1"=5'
(WEST RAMP DIMENSIONS/ELEVATIONS ARE MIRROR IMAGE OF EAST RAMP)

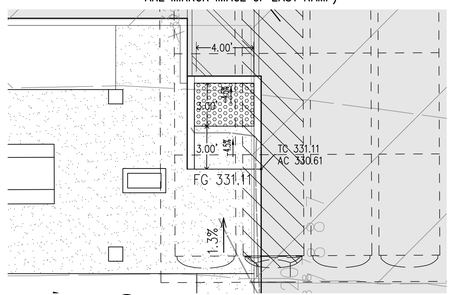

(E) HANDICAP RAMP DETAIL

SCALE: 1"=5'

NO.	DESCRIPTION	DATE	BY
	Revisions		

p:\proj\

Work Accepted: Inspector:

As-Built Corrections

By: Date:

Supervised by: Amanda Joy Musy-Verdel
Registered Civil Engineer
RCE no. 69278
signature 12/4/24 date

REGISTERED PROFESSIONAL ENGINEER AMANDA JOY MUSY-VERDEL NO. 69278 CIVIL STATE OF CALIFORNIA

HANNA-BRUNETTI EST 1990
CIVIL ENGINEERS • LAND SURVEYORS CONSTRUCTION MANAGERS
7651 EIGLEBERRY STREET • GILROY • 95020 • CALIFORNIA
OFFICE (408) 842-2173 • FAX (408) 842-3662
EMAIL: ENGINEERING @ HANNABRUNETTI.COM

DRAWN	DESIGN	HOR
		1"=10'
CHECKED	DATE	VERT
APPROVED	DATE	AS BUILT
Scott C Greer — CITY ENGINEER R.C.E. # 58879		JOB NUMBER 20002

City of Morgan Hill
Public Works Department
17575 Peak Avenue, Morgan Hill - California - 95037
(408) 776-6480 - fax (408) 779-7236

Grading & Drainage Plan
215 Tennant Avenue - apn 817-04-059

City File no. PWPR2021-0006
PRINT DATE 2/12/2024
SHEET NUMBER C.5 of 15

HB JOB NO. 20002

MATCH LINE — SEE SHEET C.5

MATCH LINE — SEE SHEET C.5

Tennant Avenue

FACE OF CURB (MEDIAN)

NOTE:

EXISTING CURB, GUTTER AND SIDEWALK ALONG PROJECT FRONTAGE (TENNANT AVENUE) MAY BE REQUIRED TO BE REMOVED AND REPLACED IF DAMAGED DURING CONSTRUCTION.

CONSTRUCTION NOTES:

- (A) CONSTRUCT CITY STD "TYPE 2" CONCRETE VERTICAL CURB PER CITY DWG NO. A-3
- (B) CONSTRUCT CITY STD "TYPE 1" CONCRETE CURB & GUTTER PER CITY DWG NO. A-3
- (C) CONSTRUCT MODIFIED CURB PER DETAIL; SEE SHEET C.5
- (D) CONSTRUCT HANDICAP RAMP AND INSTALL DETECTABLE WARNINGS PER CALIFORNIA BUILDING CODE 11B-705.1.2.2.2 (A)
- (E) CONSTRUCT HANDICAP RAMP AND INSTALL DETECTABLE WARNINGS PER CALIFORNIA BUILDING CODE 11B-705.1.2.2.2 (A)
- (F) CONSTRUCT SIDEWALK PER CITY DWG NO. A-4
- (G) PROVIDE TRANSITION FROM CURB & GUTTER TO MODIFIED CURB

NOTES:

1. CONTRACTOR TO VERIFY THICKNESS OF FOUNDATION AND PAD GRADE WITH GEOTECHNICAL ENGINEER AND STRUCTURAL/FOUNDATION PLANS AND/OR ENGINEERS.
2. PROVIDE ACCESSIBLE PARKING STALL, SIGNS, AND STRIPING PER CALTRANS STD PLAN A90A
3. PRIVATE CURB INLET STENCILING: ALL CURB INLETS SHALL HAVE THERMOPLASTIC STENCILING: "NO DUMPING, FLOWS TO CREEK/RIVER."
4. THE WORDS "NO PARKING" SHALL BE PAINTED ON THE GROUND WITHIN EACH LOADING AND UNLOADING ACCESS AISLE. THIS NOTICE SHALL BE PAINTED IN WHITE LETTERS NO LESS THAN 12-INCHES HIGH AND LOCATED SO THAT IT IS VISIBLE FROM THE ADJACENT VEHICULAR WAY.

GRAPHIC SCALE

10 0 5 10 20 40

(IN FEET)
1 inch = 10 ft.

NO.	DESCRIPTION	DATE	BY
	Revisions		

p:\proj\

Work Accepted: Inspector:

As-Built Corrections

By: Date:

Supervised by:
Amanda Joy Musy-Verdel
Registered Civil Engineer
RCE no. 69278
signature 12/4/24 date

HANNA-BRUNETTI EST. 1910
CIVIL ENGINEERS • LAND SURVEYORS
CONSTRUCTION MANAGERS
7651 EIGLEBERRY STREET • GILROY • 95020 • CALIFORNIA
OFFICE (408) 842-2173 • FAX (408) 842-3662
EMAIL: ENGINEERING @ HANNABRUNETTI.COM

DRAWN	DESIGN	HOR 1"=10'
CHECKED	DATE	VERT
APPROVED	DATE	AS BUILT
Scott C Greer — CITY ENGINEER R.C.E. # 58879		JOB NUMBER 20002

City of Morgan Hill
Public Works Department
17575 Peak Avenue, Morgan Hill - California - 95037
(408) 776-6480 - fax (408) 779-7236

Grading & Drainage Plan
215 Tennant Avenue - apn 817-04-059

City File no. PWPR2021-0006
PRINT DATE 2/12/2024
SHEET NUMBER C.6 of 15

HB JOB NO. 20002

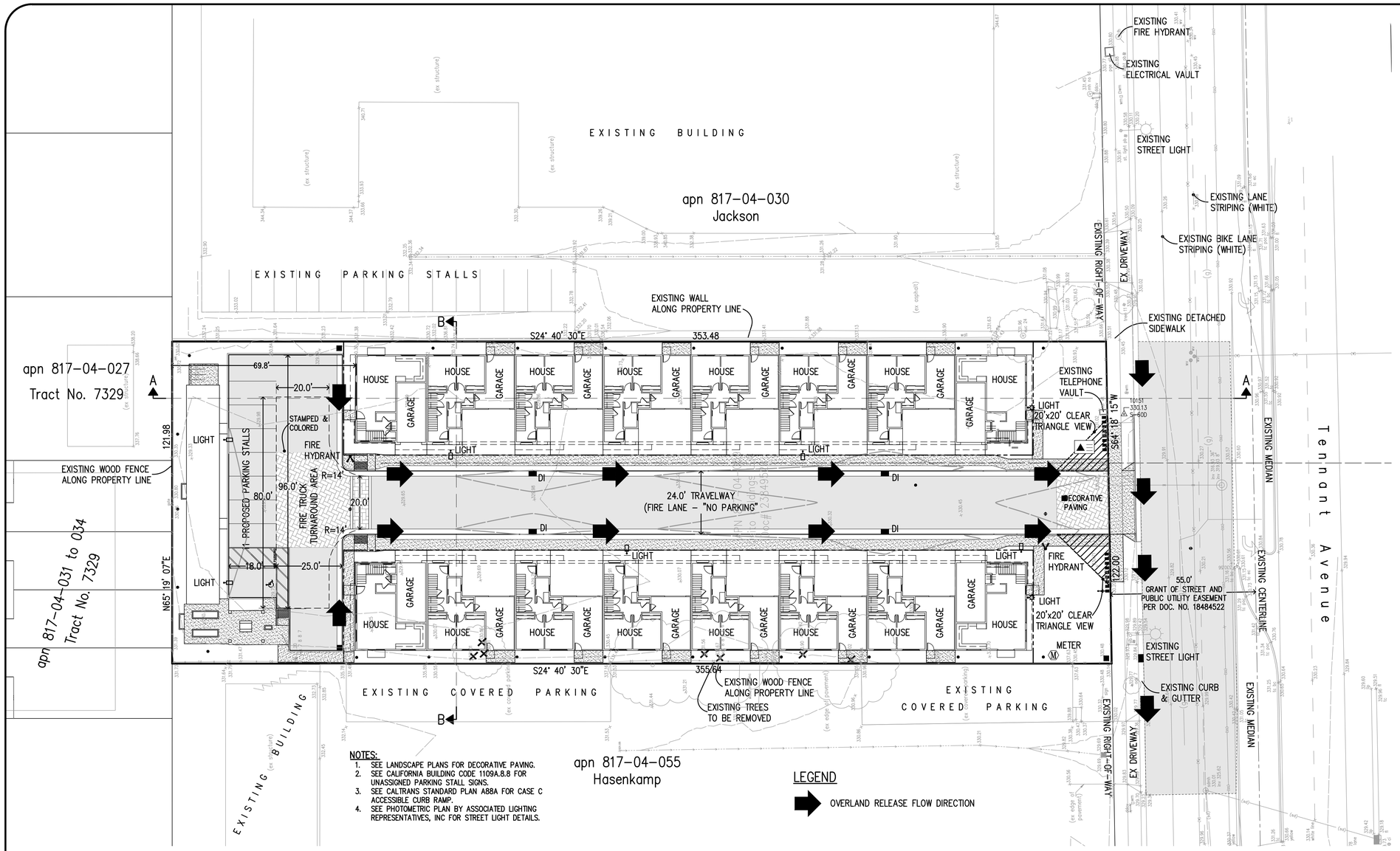

TREE PROTECTION NOTES:

A) MARK ALL TREES TO BE SAVED WITH A SURVEY FLAG OR RIBBON. DO NOT NAIL OR STAPLE DIRECTLY TO THE TREE.

B) ERECT A TEMPORARY FENCE ENCLOSING AN AREA EQUAL TO AT LEAST THE DRIPLINE OF THE TREE (OR AS FAR FROM THE TRUNK AS POSSIBLE). THIS TREE PROTECTION ZONE SHALL NOT BE USED FOR PARKING, STORAGE OF BUILDING MATERIALS, OR OTHER EQUIPMENT OR THE PLACEMENT OF TEMPORARY OR PERMANENT FILL. SIGNS SHOULD BE POSTED IDENTIFYING THE RESTRICTION OF USES IN THE TREE PROTECTION ZONE.

C) LOCATE STRUCTURES, GRADE CHANGES, AND OTHER GROUND OR SURFACE DISTURBANCES (E.G. CONCRETE POURS) AS FAR AS FEASIBLE FROM THE "DRIPLINE" AREA OF THE TREE.

D) AVOID ROOT DAMAGE THROUGH GRADING, TRENCHING, AND COMPACTION, AT LEAST WITHIN AN AREA 1.5 TIMES THE DRIPLINE AREA OF THE TREE. WHERE ROOT DAMAGE CANNOT BE AVOIDED, ROOTS ENCOUNTERED OVER 1 INCH IN DIAMETER SHOULD BE EXPOSED APPROXIMATELY 12 INCHES BEYOND THE AREA TO BE DISTURBED (TOWARDS THE TREE STEM), BY HAND EXCAVATION, OR WITH SPECIALIZED HYDRAULIC OR PNEUMATIC EQUIPMENT, CUT CLEANLY WITH HAND PRUNERS OR POWER SAW AND IMMEDIATELY BACK-FILLED WITH SOIL. AVOID TEARING OR OTHERWISE DISTURBING THAT PORTION OF THE ROOTS TO REMAIN.

E) THE ADDITION OF PLANT OR OTHER LANDSCAPING MATERIALS SHALL REMAIN OUTSIDE OF THE DRIPLINE OF ALL TREES.

F) ALL TREES PROPOSED TO BE REMOVED FROM THE PROJECT SITE SHALL BE REPLACED AT A 1:1 RATIO. REPLACEMENT TREES SHALL BE CONSISTENT WITH THE CITY OF MORGAN HILL MASTER STREET TREE. ALL REPLACEMENT TREES SHALL BE A MINIMUM OF 15-GALLONS IN SIZE. ALL MITIGATION/REPLACEMENT TREES SHALL BE SHOWN ON THE LANDSCAPE PLANS AND APPROVED BY THE DEVELOPMENT SERVICES DIRECTOR PRIOR TO THE ISSUANCE OF THE BUILDING/GRADING PERMIT.

G) ANY TREE SUBJECT TO CHAPTER 12.32 RESTRICTIONS ON REMOVAL OF SIGNIFICANT TREES OF THE MORGAN HILL MUNICIPAL CODE REQUIRES APPROVAL FROM THE PLANNING DIVISION. THE APPLICANT SHALL REQUEST APPROVAL PRIOR TO REMOVING ANY SIGNIFICANT TREES.

NOTES:

1. SEE LANDSCAPE PLANS FOR DECORATIVE PAVING.
2. SEE CALIFORNIA BUILDING CODE 1109A.8.8 FOR UNASSIGNED PARKING STALL SIGNS.
3. SEE CALTRANS STANDARD PLAN A88A FOR CASE C ACCESSIBLE CURB RAMP.
4. SEE PHOTOMETRIC PLAN BY ASSOCIATED LIGHTING REPRESENTATIVES, INC FOR STREET LIGHT DETAILS.

LEGEND

OVERLAND RELEASE FLOW DIRECTION

GRAPHIC SCALE

20 0 10 20 40 80

(IN FEET)
1 inch = 20 ft.

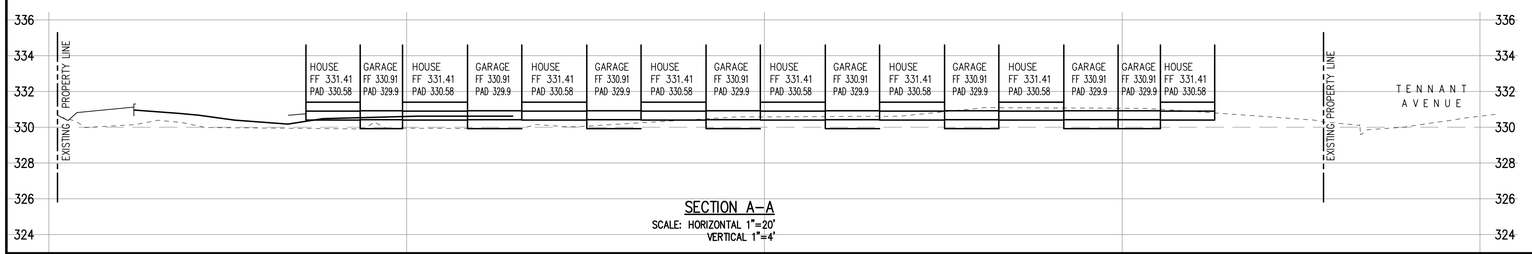

SECTION A-A
SCALE: HORIZONTAL 1"=20'
VERTICAL 1"=4'

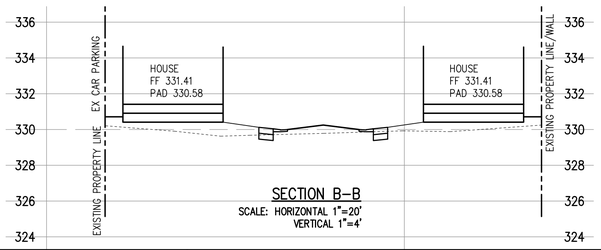

SECTION B-B
SCALE: HORIZONTAL 1"=20'
VERTICAL 1"=4'

NO.	DESCRIPTION	DATE	BY
	Revisions		

p:\proj\

Work Accepted: Inspector:

As-Built Corrections

By: Date:

Supervised by:
Amanda Joy Musy-Verdel
Registered Civil Engineer
RCE no. 69278
signature 12/4/24 date

HANNA-BRUNETTI EST. 1975
CIVIL ENGINEERS • LAND SURVEYORS
CONSTRUCTION MANAGERS
7651 EIGLEBERRY STREET • GILROY • 95020 • CALIFORNIA
OFFICE (408) 842-2173 • FAX (408) 842-3662
EMAIL: ENGINEERING @ HANNABRUNETTI.COM

DRAWN	DESIGN	HOR 1"=20'
CHECKED	DATE	VERT
APPROVED	DATE	AS BUILT
Scott C Greer — CITY ENGINEER R.C.E. # 58879		JOB NUMBER 20002

City of Morgan Hill
Public Works Department
17575 Peak Avenue, Morgan Hill - California - 95037
(408) 776-6480 - fax (408) 779-7236

Development Plan & Cross Sections

Tennant Square

City File no. PWPR2021-0006
PRINT DATE 2/12/2024
SHEET NUMBER C.7 of 15

HB JOB NO. 20002

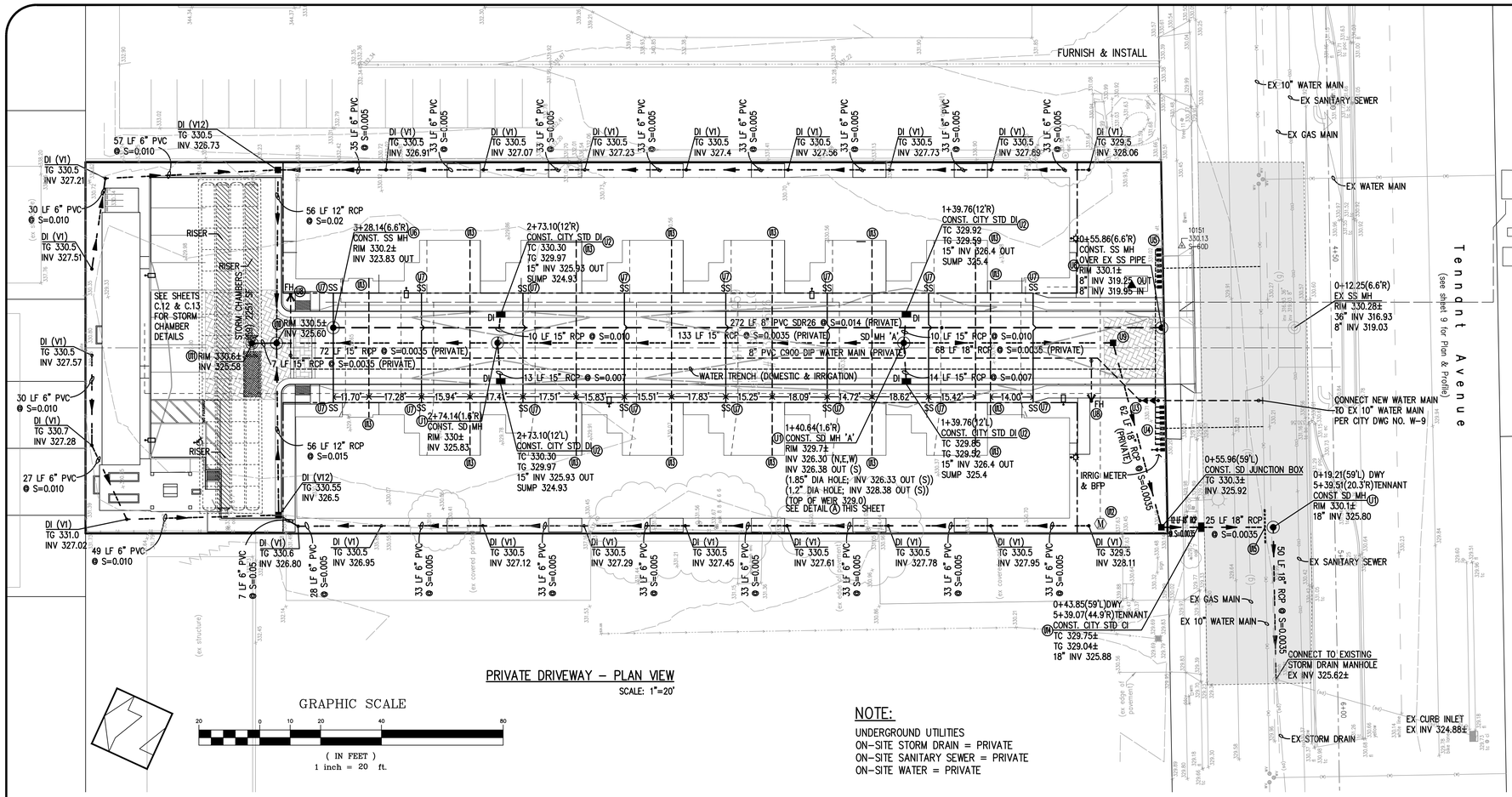

UTILITY CONSTRUCTION NOTES:

(U1) CONSTRUCT STORM DRAIN MANHOLE PER CITY DWG NO SD-1

(U2) CONSTRUCT STORM DRAIN DROP INLET PER CITY DWG NO SD-5

(U3) FURNISH & INSTALL DOUBLE DETECTOR CHECK VALVE ASSEMBLY PER CITY DWG NO W-8

(U4) FURNISH & INSTALL (8) 1" WATER METERS (DOMESTIC) (1) 1" WATER METER (IRRIGATION) WITH BACKFLOW PREVENTER WITH 6" MANIFOLD; COMPLETE TO WATER MAIN PER CITY DWG NO W-3 & W-6

(U5) FURNISH & INSTALL (8) 1" WATER METERS (DOMESTIC) WITH 6" MANIFOLD; COMPLETE TO WATER MAIN PER CITY DWG NO W-3

(U6) CONSTRUCT SANITARY SEWER MANHOLE PER CITY DWG NO S-4

(U7) CONSTRUCT SANITARY SEWER LATERAL PER CITY DWG NO S-2

(U8) FURNISH & INSTALL FIRE HYDRANT PER CITY DWG NO W-13

(U9) CONSTRUCT SD JUNCTION BOX; 0+71.87(1.6'R) RIM 330.09±; 18" INV 326.14 THRU

(U10) CONSTRUCT 'FIRST DEFENSE' UNIT, PER HYDRO-INTERNATIONAL SEE DETAIL ON SHEET C.13.

(U11) CONSTRUCT SD MH, SEE DETAIL 'B' (ON THIS SHEET)

(U12) 100A METER PEDESTAL "TESCO" OR EQUAL PER JOINT TRENCH PLANS

(U13) FURNISH & INSTALL 1.5-IN NOMINAL I.D. DOMESTIC WATER PIPE PER PLUMBING PLANS. PROVIDE A MINIMUM DISTANCE OF 10-FT BETWEEN WATER LINE AND SANITARY SEWER LATERAL

(U14) CONSTRUCT STORM DRAIN CURB INLET PER CITY DWG NO SD-6

(U15) EXISTING WATER MAIN/(P)STORM DRAIN PIPE CONFLICT; POTHOLE TO VERIFY WATER MAIN LOCATION/ELEVATION PRIOR TO CONSTRUCTION. PROVIDE FITTING TO RELOCATE WATER MAIN; 12" PIPE CLEARANCE.

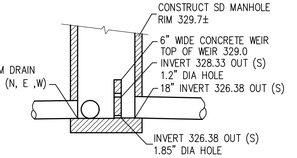

OUTLET STRUCTURE Ⓐ
STORM DRAIN MANHOLE STA 1+40.64
SCALE: 1"=5'

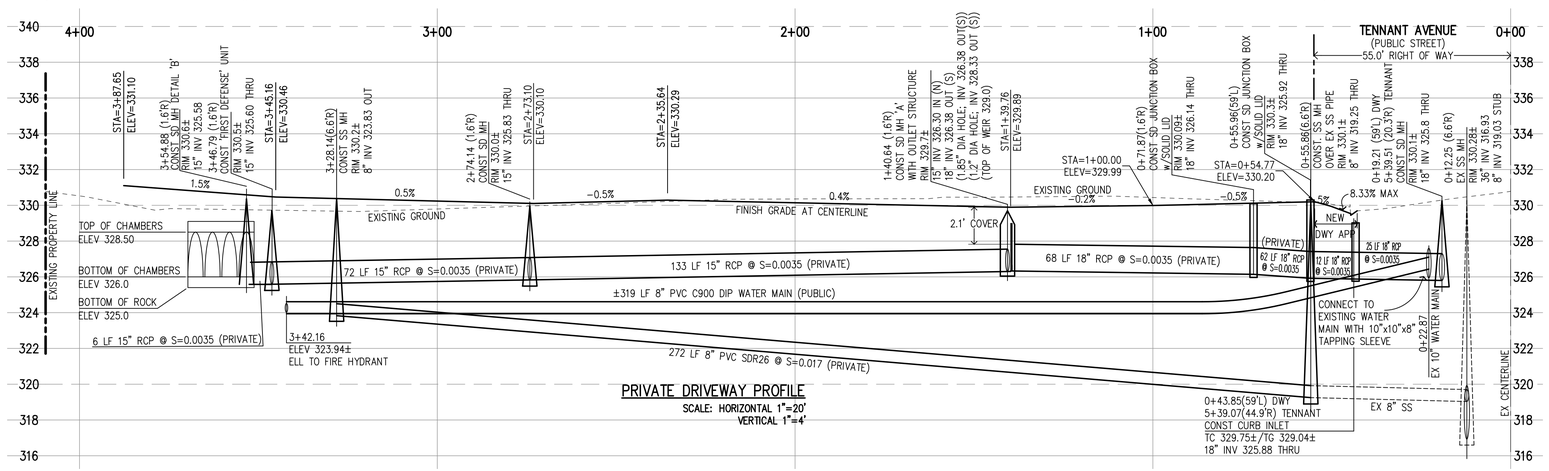

PRIVATE DRIVEWAY PROFILE
SCALE: HORIZONTAL 1"=20'
VERTICAL 1"=4'

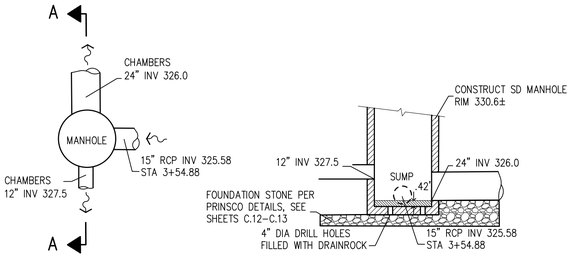

SUMP MANHOLE Ⓑ
STORM DRAIN MANHOLE STA 3+54.88
SCALE: 1"=5'

SUMP MANHOLE SECTION A-A Ⓑ
STORM DRAIN MANHOLE STA 3+54.88
SCALE: 1"=5'

EXISTING UNDERGROUND UTILITIES ARE SHOWN IN THEIR APPROXIMATE LOCATIONS BASED ON RECORD INFORMATION AVAILABLE TO THE ENGINEER AT THE TIME OF PREPARATION OF THESE PLANS. LOCATION MAY NOT HAVE BEEN VERIFIED IN THE FIELD AND NO GUARANTEE IS MADE AS TO THE ACCURACY OR COMPLETENESS OF THE INFORMATION SHOWN. THE CONTRACTOR SHALL NOTIFY UTILITY COMPANIES AT LEAST 2 WORKING DAYS IN ADVANCE OF CONSTRUCTION TO FIELD LOCATE UTILITIES. CALL UNDERGROUND SERVICE ALERT (U.S.A.), AT 811/1-800-227-2600. IT SHALL BE THE RESPONSIBILITY OF THE CONTRACTOR TO DETERMINE THE EXISTENCE AND LOCATION OF UTILITIES SHOWN ON THESE PLANS, INDICATED IN THE FIELD BY LOCATING SERVICES, OR EVIDENCE BY FACILITIES VISIBLE AT OR ADJACENT TO THE JOB SITE. ANY ADDITIONAL COST INCURRED AS A RESULT OF THE CONTRACTOR'S FAILURE TO VERIFY LOCATIONS OF EXISTING UTILITIES PRIOR TO BEGINNING CONSTRUCTION SHALL BE BORNE BY THE CONTRACTOR AND IS DEEMED INCLUDED AND MERGED IN THE CONTRACT UNIT PRICE.

NO.	DESCRIPTION	DATE	BY
	Revisions		

Work Accepted: Inspector:

As-Built Corrections

By: Date:

Supervised by:
Amanda Joy Musy-Verdel
Registered Civil Engineer
RCE no. 69278
signature 12/4/24 date

REGISTERED PROFESSIONAL ENGINEER * AMANDA JOY MUSY-VERDEL * NO. 69278 * CIVIL * STATE OF CALIFORNIA *

HANNA-BRUNETTI EST. 1910
CIVIL ENGINEERS • LAND SURVEYORS
CONSTRUCTION MANAGERS
7651 EIGLEBERRY STREET • GILROY • 95020 • CALIFORNIA
OFFICE (408) 842-2173 • FAX (408) 842-3662
EMAIL: ENGINEERING @ HANNABRUNETTI.COM

DRAWN	DESIGN	HOR.	1"=20'
CHECKED	DATE	VERT	
APPROVED	DATE	AS BUILT	
Scott C Greer – CITY ENGINEER R.C.E. # 58879		JOB NUMBER	20002

CITY OF MORGAN HILL

City of Morgan Hill
Public Works Department
17575 Peak Avenue, Morgan Hill - California - 95037
(408) 776-6480 - fax (408) 779-7236

Utility Plan & Osito Place Profile
215 Tennant Avenue - apn 817-04-059

City File no. PWPR2021-0006
PRINT DATE 2/12/2024
SHEET NUMBER C.8 of 15

HB JOB NO. 20002

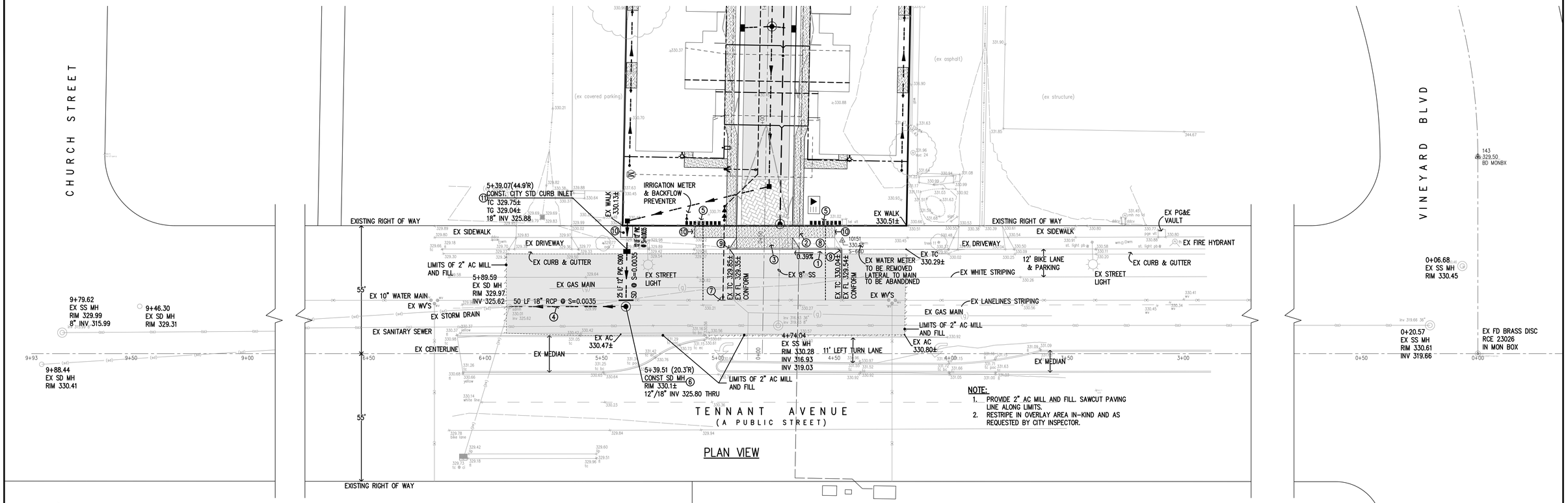

NOTE:
1. PROVIDE 2" AC MILL AND FILL. SAWCUT PAVING LINE ALONG LIMITS.
2. RESTRIPE IN OVERLAY AREA IN-KIND AND AS REQUESTED BY CITY INSPECTOR.

GRAPHIC SCALE

20 0 10 20 40 80

(IN FEET)
1 inch = 20 ft.

EXISTING UNDERGROUND UTILITIES ARE SHOWN IN THEIR APPROXIMATE LOCATIONS BASED ON RECORD INFORMATION AVAILABLE TO THE ENGINEER AT THE TIME OF PREPARATION OF THESE PLANS. LOCATION MAY NOT HAVE BEEN VERIFIED IN THE FIELD AND NO GUARANTEE IS MADE AS TO THE ACCURACY OR COMPLETENESS OF THE INFORMATION SHOWN. THE CONTRACTOR SHALL NOTIFY UTILITY COMPANIES AT LEAST 2 WORKING DAYS IN ADVANCE OF CONSTRUCTION TO FIELD LOCATE UTILITIES. CALL UNDERGROUND SERVICE ALERT (U.S.A.), AT 811/1-800-227-2600. IT SHALL BE THE RESPONSIBILITY OF THE CONTRACTOR TO DETERMINE THE EXISTENCE AND LOCATION OF UTILITIES SHOWN ON THESE PLANS, INDICATED IN THE FIELD BY LOCATING SERVICES, OR EVIDENCE BY FACILITIES VISIBLE AT OR ADJACENT TO THE JOB SITE. ANY ADDITIONAL COST INCURRED AS A RESULT OF THE CONTRACTOR'S FAILURE TO VERIFY LOCATIONS OF EXISTING UTILITIES PRIOR TO BEGINNING CONSTRUCTION SHALL BE BORNE BY THE CONTRACTOR AND IS DEEMED INCLUDED AND MERGED IN THE CONTRACT UNIT PRICE.

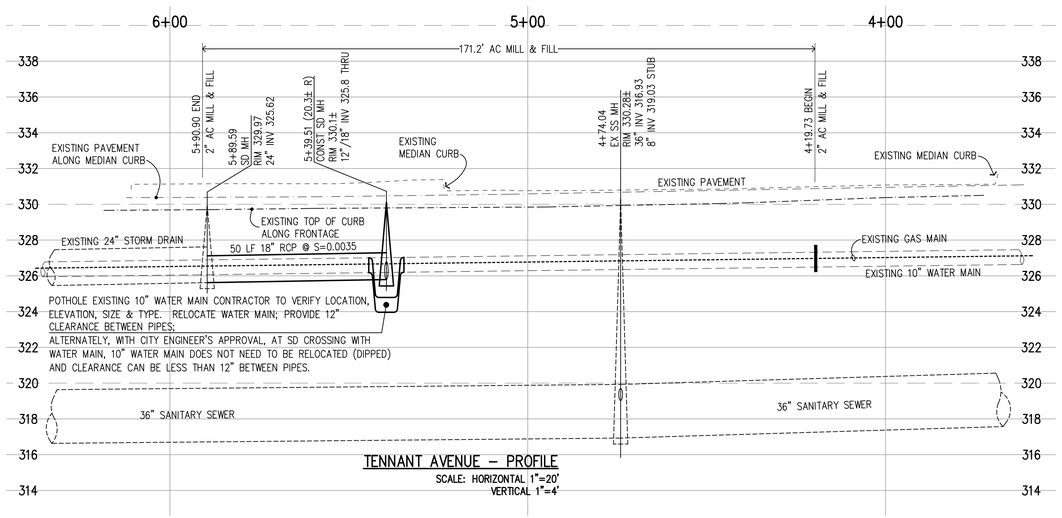

TENNANT AVENUE – PROFILE
SCALE: HORIZONTAL 1"=20'
VERTICAL 1"=4'

CONSTRUCTION NOTES
1. CONSTRUCT CURB & GUTTER (TYPE 1) PER CITY DWG NO. A-3
2. CONSTRUCT DETACHED SIDEWALK PER CITY DWG NO. A-4
3. CONSTRUCT RESIDENTIAL DRIVEWAY APPROACH PER CITY DWG NO. A-9
4. PROVIDE TRENCH RESTORATION PER CITY DWG NO. U-3
5. FURNISH & INSTALL WATER METERS AND MANIFOLD PER CITY DWG NO. W-1, W-3 AND W-6
   (16) DOMESTIC (1) IRRIGATION WITH BACKFLOW PREVENTER
6. CONSTRUCT STORM DRAIN MANHOLE PER CITY DWG NO. SD-1
7. CONNECT NEW WATER MAIN TO EXISTING 10" WATER MAIN PER CITY DWG NO. W-9
8. SAWCUT, REMOVE & DISPOSE EXISTING SECTION OF CURB, GUTTER, SIDEWALK AND DRIVEWAY APPROACH.
9. CURB & GUTTER TO CONFORM TO EXISTING CURB & GUTTER
10. SAWCUT, REMOVE & DISPOSE EXISTING SECTION OF SIDEWALK TO THE NEAREST EXPANSION JOINT; NEW SIDEWALK TO EXISTING SIDEWALK
11. CONSTRUCT STORM DRAIN CURB INLET PER CITY DWG NO SD-6

NO.	DESCRIPTION	DATE	BY

p:\proj\ Revisions

Work Accepted: Inspector:

As-Built Corrections

By: Date:

Supervised by:
Amanda Joy Musy-Verdel
Registered Civil Engineer
RCE no. 69278
signature 12/4/24 date

REGISTERED PROFESSIONAL ENGINEER * AMANDA JOY MUSY-VERDEL * NO. 69278 * CIVIL * STATE OF CALIFORNIA *

HANNA-BRUNETTI
EST. 1910
CIVIL ENGINEERS • LAND SURVEYORS
CONSTRUCTION MANAGERS
7651 EIGLEBERRY STREET • GILROY • 95020 • CALIFORNIA
OFFICE (408) 842-2173 • FAX (408) 842-3662
EMAIL: ENGINEERING @ HANNABRUNETTI.COM

DRAWN	DESIGN	HOR	1"=20'
CHECKED	DATE	VERT	
APPROVED	DATE	AS BUILT	
Scott C Greer – CITY ENGINEER R.C.E. # 58879		JOB NUMBER	20002

CITY OF MORGAN HILL

City of Morgan Hill
Public Works Department
17575 Peak Avenue, Morgan Hill - California - 95037
(408) 776-6480 - fax (408) 779-7236

Tennant Avenue - Plan & Profile
215 Tennant Avenue - apn 817-04-059

City File no. PWPR2021-0006
PRINT DATE 2/12/2024
SHEET NUMBER C.9 of 15

HB JOB NO. 20002

1. Pavement Milling:
   a. Pavement milling shall consist of cold milling existing asphalt concrete in areas to receive asphalt concrete fill and asphalt concrete overlay treatments as shown on the plans. Milling shall be in conformance with Section 39-3.04 "Cold Planing Asphalt Concrete Pavement" of the latest Caltrans Standard Specifications (CSS).
   b. The full depth grinding operations along Tennant Avenue shall extend to the edge of all concrete median curbs.
   c. Pavement milling shall not be allowed more than 48 hours prior to schedule overlay (fill) operations without written authorization from the City.
   d. Cold milling machines shall be operated so as not to produce fumes or smoke. They shall be capable of planning/milling the pavement without requiring the use of a heating device to soften the pavement during, or prior to, the cutting operation.
   e. Pavement milling at corners, returns and hard to get areas shall be done with special grinding equipment capable of grinding such areas.
   f. All pavement edges shall be cut to a vertical edge to the specified milled depth. The Contractor may use milling machine, saw cutting, or jackhammer equipment to cut the vertical edge in the pavement.
   g. Any sections of asphalt that becomes loose after pavement milling shall be removed and disposed of by the Contractor at the Contractor's expense.
   h. The Contractor shall be responsible for maintaining all milled surfaces in order to prevent tire and suspension damage to vehicles and to prevent hazards to bicyclists and pedestrians. Debris from the grinding operations shall be removed from the roadway by vacuum sweeping immediately after grinding operations.
   i. No drop-off shall remain between the existing pavement and the milled area when the pavement is opened to public traffic at all transverse joints. No drop-off shall remain between all adjoining driveway approaches on arterial streets and the milled pavement area when the pavement is opened to public traffic. If asphalt concrete has not been placed to the level of existing pavement before the pavement is to be opened to public traffic, a temporary asphalt concrete taper shall be constructed. Asphalt concrete for temporary tapers shall be placed to the level of the existing pavement and tapered on a slope of 12:1 or flatter to the level of the milled area. The same method shall be used on all structures, which includes utility structures, that are left above the traveled asphalt surface.
   j. Where lanes are open to traffic, the drop-off between adjacent travel lanes must not be more than 0.15 foot. Asphalt concrete for temporary tapers may be spread and compacted by any method that will produce a smooth transition in the riding surface. Asphalt concrete tapers shall be completely removed, including removing all loose material from the underlying surface, before placing the permanent surfacing. Kraft paper, or other approved bond breaker, may be placed under the conform tapers to facilitate the removal of the taper.
   k. The material collected from pavement grinding operations from the roadway surface shall be immediately removed from the site of the work. The removal crew shall follow within fifty feet (50') of the milling/wedge cutting machine, unless otherwise directed by the Engineer.

   l. If the milled pavement surfaces are not paved with asphalt concrete on the same day, the Contractor shall post and maintain "UNEVEN PAVEMENT" signage in advance of the milled areas, along the milled street, and all adjoining side streets and driveway approaches. The signage shall be placed on type 1 barricades with working flashing beacons. The Contractor shall remove all signage upon completion of paving operations.

2. Hot Mix Asphalt Concrete (HMA)
   a. Hot mix asphalt concrete shall be used as an overlay (fill). New pavement shall be furnished, placed, and compacted in accordance with Section 39 "Asphalt Concrete" of the CSS. Asphalt Concrete shall be compacted to a minimum 95 percent of Maximum Theoretical Density as determined by American Society of Testing Materials (ASTM) D-2041.
   b. Material:
      i. The asphalt concrete for overlay shall be Type A, 12.5 mm (1/2") medium maximum gradation. No percentage of RAP (Reclaimed Asphalt Pavement) shall be permitted in the asphalt concrete placed as the final lift/wearing course on any of the City streets to be overlayed with this project
      ii. Asphalt binder shall be PG 64-10. Asphalt shall conform to these Technical Provisions and not Section 92, "Asphalts," of the CSS.
      iii. Asphalt shall consist of refined petroleum or a mixture of refined liquid asphalt and refined solid asphalt, prepared from crude petroleum. Asphalt shall be:
         1. Free from residues caused by the artificial distillation of coal, coal tar, or paraffin.
         2. Free from water.
         3. Homogeneous.
      iv. The Contractor shall furnish asphalt in conformance with Caltrans' "Certification Program for Suppliers of Asphalt." Caltrans maintains the program requirements, procedures, and a list of approved suppliers at: http://www.dot.ca.gov/hq/esc/Translab/ormt/fpmcoc.htm
      v. The Contractor shall ensure the safe transportation, storage, use, and disposal of asphalt.
      vi. The Contractor shall prevent the formation of carbonized particles caused by overheating asphalt during manufacturing or construction.
      vii. Performance graded (PG) asphalt binder shall conform to the following:

Property	AASHTO Test Method	Performance Graded Asphalt Binder Specification Grade PG 58-22	PG 64-10	PG 64-16	PG 64-28	PG 70-10
Original Binder						
Flash Point, Minimum °C	T48	230	250	230	250	230
Solubility, Minimum % [a]	T44	99	99	99	99	99
Viscosity at 135°C,[c] Maximum, Pa·s	T316	3.0	3.0	3.0	3.0	3.0
Dynamic Shear, Test Temp. at 10 rad/s, °C Minimum G*/sin(delta),	T315	58 1.00	64 1.00	64 1.00	64 1.00	70 1.00
RTFO Test [a] Mass Loss, Maximum, %	T240	1.00	1.00	1.00	1.00	1.00
RTFO Test Aged Binder						
Dynamic Shear, Test Temp. at 10 rad/s, °C Minimum G*/sin(delta), kPa	T315	58 2.20	64 2.20	64 2.20	64 2.20	70 2.20
Ductility at 25°C Minimum, cm	T51	75	75	75	75	75
PAV [a] Aging, Temperature, °C	R28	100	100	100	100	110
RTFO Test and PAV Aged Binder						
Dynamic Shear, Test Temp. at 10 rad/s, °C Minimum G*/sin(delta), kPa	T315	22 [e] 5000	31 [e] 5000	28 [e] 5000	22 [e] 5000	34 [e] 5000
Creep Stiffness, Test Temperature, °C Maximum S-value, MPa Minimum M-value	T313	-12 300 0.300	0 300 0.300	-6 300 0.300	-18 300 0.300	0 300 0.300

1. Performance Graded Binder Table Notes:
   a. For use as asphalt rubber base stock for high mountain and high desert area.
   b. The Engineer will waive this specification if the supplier is a Quality Supplier as defined by the Caltrans' "Certification Program for Suppliers of Asphalt."
   c. The Engineer will waive this specification if the supplier certifies the asphalt binder can be adequately pumped and mixed at temperatures meeting applicable safety standards.
   d. Test the sample at 3°C higher if it fails at the specified test temperature. G*sin(delta) shall remain 5000 kPa maximum.
   e. "RTFO Test" means the asphaltic residue obtained using the Rolling Thin Film Oven Test, AASHTO Test Method T240 or ASTM Designation: D 2872.
   f. "PAV" means Pressurized Aging Vessel.

viii. Tack Coat:
   1. Paint binder shall be applied to all horizontal and vertical surfaces to receive asphalt concrete surfacing. Paint binder shall be furnished and applied in accordance with Section 39-2.01C(3)(f), "Tack Coat", Section 92 "Asphalt Binders", and Section 94 "Asphaltic Emulsions".
   2. Tack Coat shall be SS-1H asphaltic emulsion.

c. Construction

   i. The Contractor shall apply paving asphalt at a temperature between 120°and 190°C. The Engineer will determine the exact temperature of paving asphalt.
   ii. The surface, when compacted, shall be smooth, dense, well bonded, and of uniform texture and appearance. The compacted surface course of asphalt concrete shall be free from ruts, humps, depressions or irregularities. When a straightedge 3.6 meters (12 feet) long is laid on the finished surface and parallel with the centerline of the road or driveway, the surface shall not vary more than .006 meters (0.02 foot) from the lower edge of the straightedge. The transverse slope of the finished surface shall be uniform to a degree such that no depressions greater than 0.02 foot are present when tested with a straight-edge, 12 foot long, laid in a direction transverse to the center line and extending from edge to edge of a 3.05 meter (10 foot) pass.
   iii. Any ridges, indentations or other objectionable marks left in the surface of the asphalt concrete shall be eliminated by rolling or other means. The use of any equipment that leaves ridges, indentations or other objectionable marks in the asphalt concrete shall be discontinued.
   iv. In addition to the requirements in Section 39-2.01C(2), "Spreading and Compacting Equipment," of the CSS, asphalt-paving equipment shall be equipped with automatic screed controls and a sensing device or devices. When placing asphalt concrete the automatic controls shall control the longitudinal grade and transverse slope of the screed. Grade and slope references shall be furnished, installed and maintained by the Contractor. Ski devices shall be a minimum length of at least 30 feet with a rigid one-piece unit whereby the entire length activates the sensor.
   v. When placing contiguously with previously placed mats, the end of the screed adjacent to the previously placed mat shall be controlled by a sensor that responds to grade of the previously placed mat and will reproduce the grade in the new mat within a 0.01-foot tolerance.
   vi. Should the method and equipment furnished by the Contractor fail to produce a layer of asphalt concrete conforming to the above requirements, including straightedge tolerance of Section 39-2.01A(4)(i)(iii), the paving operations shall be discontinued upon notice of the Engineer, and the Contractor shall modify his equipment or furnish substitute equipment within three (3) working days of such notice of the Engineer.
   vii. The area to which tack coat has been applied shall be closed to public traffic. All possible care shall be taken to avoid tracking binder material onto existing pavement surfaces beyond the limits of construction. A drop-off of more than 0.10-foot will not be allowed at any time between adjacent lanes open to public traffic.
   viii. The Contractor shall be responsible for temporary pavement delineation and markings as required by the Engineer for the maintenance of a safe traveled way. The Contractor shall be responsible for providing a safe and well-marked roadway. This shall include providing temporary striping during evening and weekend hours if specified by the Engineer.

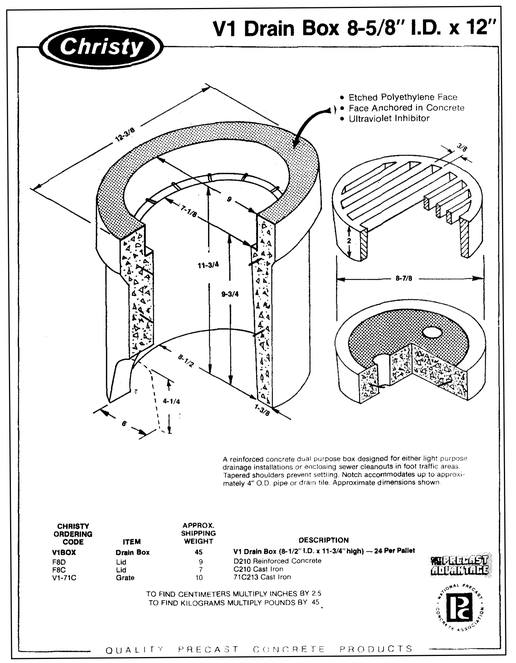

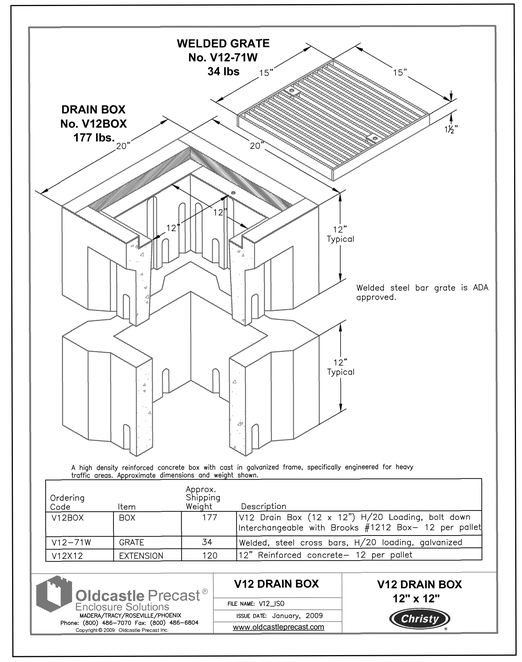

NO.	DESCRIPTION	DATE	BY
	p:\proj\ Revisions		

Work Accepted: Inspector:
As–Built Corrections
By: Date:

Supervised by: Amanda Joy Musy–Verdel
Registered Civil Engineer
RCE no. 69278
signature 12/4/24 date

REGISTERED PROFESSIONAL ENGINEER AMANDA JOY MUSY–VERDEL NO. 69278 CIVIL STATE OF CALIFORNIA

HANNA-BRUNETTI EST. 1910
CIVIL ENGINEERS • LAND SURVEYORS
CONSTRUCTION MANAGERS
7651 EIGLEBERRY STREET • GILROY • 95020 • CALIFORNIA
OFFICE (408) 842-2173 • FAX (408) 842-3662
EMAIL: ENGINEERING @ HANNABRUNETTI.COM

DRAWN DESIGN HOR 1"=20'
CHECKED DATE VERT
APPROVED DATE AS BUILT
Scott C Greer CITY ENGINEER R.C.E. # 58879
JOB NUMBER 20002

CITY OF MORGAN HILL
City of Morgan Hill
Public Works Department
17575 Peak Avenue, Morgan Hill - California - 95037
(408) 776-6480 - fax (408) 779-7236

City Pavement Specifications & Details
215 Tennant Avenue - apn 817-04-059

City File no. PWPR2021–0006
PRINT DATE 5/25/2023
SHEET NUMBER C.10 of 15

HB JOB NO. 20002

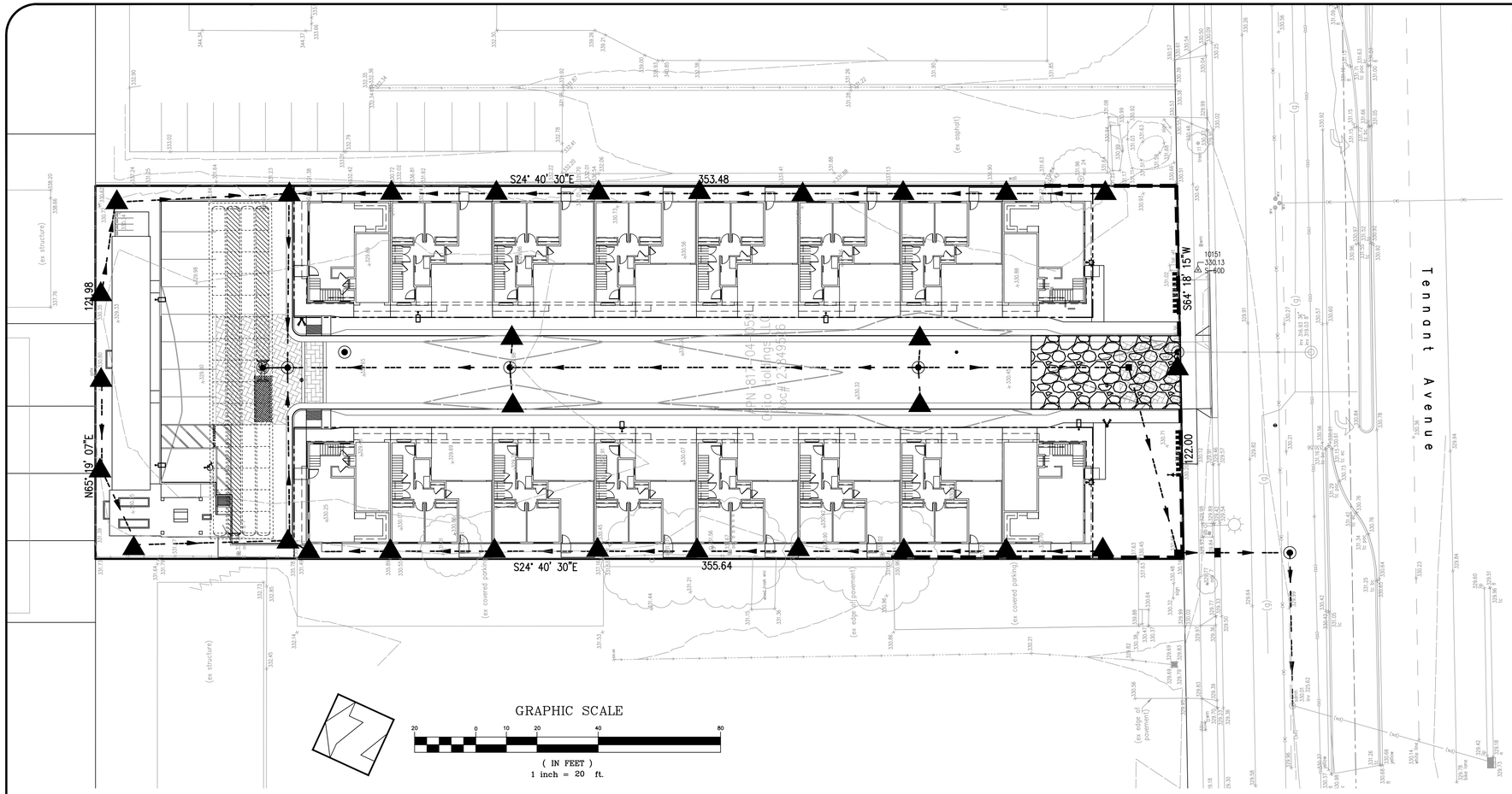

EROSION CONTROL NOTES

1. EROSION CONTROL MEASURES SHALL BE EFFECTIVE FOR CONSTRUCTION DURING THE RAINY SEASON; SEPTEMBER 15 THROUGH MAY 1st.
2. NO STORM WATER RUNOFF SHALL BE ALLOWED TO DRAIN INTO THE EXISTING AND/OR PROPOSED UNDERGROUND STORM SYSTEM UNTIL SUITABLE EROSION CONTROL MEASURES ARE FULLY IMPLEMENTED. NO STORM WATER RUNOFF SHALL BE ALLOWED TO ENTER THE STORM DRAIN SYSTEM THAT IS NOT CLEAR, AND FREE OF SILTS.
3. A FIBER ROLL BARRIER PER "DETAIL SE-5" SHALL BE INSTALL ALONG THE PERIMETER OF THE PROJECT SITE. THE LOCATION OF THE FIBER ROLL ALONG THE PERIMETER SHALL BE ADJUSTED TO ELIMINATE SEDIMENT LADEN RUNOFF FROM LEAVING THE SITE. A FIBER ROLL SHALL ALSO BE REQUIRED AROUND THE PERIMETER OF ANY STOCKPILE OR OTHER SITE OF BARE, LOOSE EARTH.
4. ALL STORM DRAIN MANHOLES, CATCH BASINS, AND/OR DROP INLETS THAT ARE TO ACCEPT STORM WATER SHALL HAVE INLET PROTECTION MEASURES PER DETAIL SE-10. STORM WATER RUNOFF SHALL BE DIRECTED TO THESE INLETS ONLY. STORM DRAIN CATCH BASINS THAT ARE NOT COMPLETE, SHALL BE BLOCKED OFF COMPLETELY.
5. THE NAME, ADDRESS, AND 24 HOUR TELEPHONE NUMBER OF THE PERSON RESPONSIBLE FOR THE IMPLEMENTATION OF THE EROSION CONTROL PLAN SHALL BE PROVIDED TO THE CITY.
6. PRIOR TO GRADING, AN ENTRANCE SHALL BE CONSTRUCTED, CONSISTING OF A MINIMUM OF 50 LF OF DRAIN ROCK, 3" IN DIAMETER, PLACED OVER MIRAFI 500X (OR EQUAL) PER DETAIL TC-1. THE ENTRANCE SHALL CONFORM TO "CONSTRUCTION ENTRANCE DETAIL TC-1". THERE SHALL BE ONLY ONE ENTRANCE/EXIT POINT TO THE SITE DURING THE RAINY SEASON. THE LOCATION SHALL BE AS SHOWN ON THESE PLANS, OR AT A LOCATION APPROVED BY THE CITY.
7. ALL AREAS OF BARE, TURNED OR DISTURBED EARTH SHALL BE STABILIZED BY USE OF HYDROSEED PER THE TABLE BELOW. ALL STOCKPILES, AND/OR BORROW AREAS SHALL BE PROTECTED WITH APPROPRIATE EROSION CONTROL MEASURES SUCH AS A PERIMETER SILT FENCE, AND OTHER METHODS TO PREVENT ANY EROSION OR SILTS MIGRATION. ALL EROSION CONTROL MEASURES SHALL BE MAINTAINED UNTIL DISTURBED AREAS ARE STABILIZED. CHANGES TO THE EROSION CONTROL PLAN SHALL BE MADE TO MEET FIELD CONDITIONS, BUT ONLY WITH THE APPROVAL OF, OR AT THE DIRECTION OF THE COUNTY INSPECTOR. THE STORM DRAIN SYSTEM SHALL MAINTAIN A FORM OF DRAIN INLET PROTECTION UNTIL COUNTY ACCEPTS THE FINAL STREET IMPROVEMENTS. THE DRAIN INLET PROTECTION SHALL BE MAINTAINED, EFFECTIVE AND SUBJECT TO COUNTY INSPECTOR'S APPROVAL.
8. ALL PAVED STREET, AND AREAS ADJACENT TO THE SITE SHALL BE KEPT CLEAR OF EARTH MATERIALS AND DEBRIS. THE SITE SHALL BE MAINTAINED SO AS TO ELIMINATE SEDIMENT LADEN RUNOFF FROM ENTERING THE STORM DRAIN SYSTEM.
9. IT IS THE RESPONSIBILITY OF THE CONTRACTOR TO INSPECT AND REPAIR ALL EROSION CONTROL FACILITIES AT THE END OF EACH DAY DURING THE RAINY SEASON. ANY DAMAGED STRUCTURAL MEASURES ARE TO BE REPAIRED BY END OF THE DAY. TRAPPED SEDIMENT IN "SD INLETS" (AND OTHER EROSION CONTROL MEASURES) SHALL BE REMOVED TO MAINTAIN TRAP EFFIENCY. REMOVED SEDIMENT SHALL BE DISPOSED BY SPREADING ON SITE, WHERE IT WILL NOT MIGRATE.
10. IT IS THE RESPOSIBILITY OF THE CONTRACTOR TO PREVENT THE FORMATION OF AIRBORNE DUST NUISANCE AND SHALL BE RESPOSIBILE FOR ANY DAMAGE RESULTING FROM A FAILURE TO DO SO.
11. ALL DRAIN SWALES SHALL BE PER DETAIL EC-9.
12. INCOMPLETE GRADING SHALL NOT BE ALLOWED. CONTRATOR SHALL MAINATIN A DRAIN PATH AS SHOWN ON THIS PLAN. SAID DRAIN PATH SHALL BE MAINTAINED LINED DRAIN SWALES, AND INLET PROTECTION AT A MINIMUM. IF PONDING DOES OCCUR ON THE SITE AFTER GRADING, THE WATER MUST BE FREE AND CLEAR OF SEDIMENT PRIOR TO DISCHARGE TO THE STORM DRAIN SYSTEM. THIS REQUIREMENT MAY NECESSITATE THE USE OF NATURAL AND/OR MECHANICAL DESILTING METHODS, SUBJECT TO APPROVAL BY THE COUNTY INSPECTOR.
13. F THESE EROSION CONTROL MEASURE PROVE INADEQUATE, STRAW MULCH, TACKIFIER, AND ADDITIONAL HYDROSEEDING MAY BE REQUIRED.

HYDROSEED TABLE

ITEM	LBS/ACRE
COMMON BARLEY	45
ANNUAL RYEGRASS	45
CRIMSON CLOVER	10
FERTILIZER 7-2-3	400
FIBER MULCH	2000
TACKIFIER	100

14. ALL GRADING WORK BETWEEN SEPTEMBER 15th AND MAY 1st IS AT THE DISCRETION OF THE CITY INSPECTOR.
15. PROVIDE SHRUBS AND/OR TREES REQUIRED ON SLOPES GREATER THAN 15 FEET IN VERTICAL HEIGHT.
16. THE OWNER/OWNER'S CONTRACTOR, AGENT, AND/OR ENGINEER SHALL INSTALL AND MAINTAIN THROUGHOUT THE DURATION OF CONSTRUCTION AND UNTIL THE ESTABLISHMENT OF PERMANENT STABILIZATION AND SEDIMENT CONTROL WITHIN THE SANTA CLARA COUNTY MAINTAINED ROAD RIGHT OF WAY AND ANY PORTION OF THE SITE WHERE STORM WATER RUN-OFF IS DIRECTLY FLOWING INTO THE SANTA CLARA COUNTY MAINTAINED ROAD RIGHT OF WAY BEST MANAGEMENT PRACTICES (BMP'S) TO PREVENT CONSTRUCTION MATERIALS, EXCAVATED MATERIALS, WASTE MATERIALS, AND SEDIMENT CAUSED BY EROSION FROM CONSTRUCTION ACTIVITIES ENTERING THE STORM DRAIN SYSTEM, WATERWAYS, AND ROADWAY INFRASTRUCTURE. BMP'S SHALL INCLUDE, BUT NOT LIMITED TO, THE FOLLOWING PRACTICES APPLICABLE TO THE PUBLIC ROAD AND EXPRESSWAY FACILITIES:
    A) REDUCTION OF POLLUTANTS IN STORM WATER DISCHARGES FROM THE CONSTRUCTION SITE AND THE CONTRACTOR'S MATERIAL AND EQUIPMENT LAYDOWN/STAGING AREAS.
    B) PREVENTION OF TRACKING OF MUD, DIRT AND CONSTRUCTION MATERIALS ONTO PUBLIC ROAD RIGHT OF WAY.
    C) PREVENTION OF DISCHARGE OF WATER RUNOFF DURING DRY AND WET WEATHER CONDITIONS ONTO PUBLIC ROAD RIGHT OF WAY
17. THE OWNER/OWNER'S CONTRACTOR, AGENT, AND/OR ENGINEER SHALL ENSURE THAT ALL TEMPORARY CONSTRUCTION FACILITIES, INCLUDING BUT NOT LIMITED TO CONSTRUCTION MATERIALS, DELIVERIES, HAZARDOUS AND NON-HAZARDOUS MATERIAL STORAGE, EQUIPMENT, TOOLS, PORTABLE TOILETS, CONCRETE WASHOUT, GARBAGE CONTAINERS, LAYDOWN YARDS, SECONDARY CONTAINMENT AREAS, ETC. ARE LOCATED OUTSIDE THE CITY RIGHT OF WAY AND ANY PORTION OF THE SITE WHERE STORM WATER RUN-OFF IS DIRECTLY FLOWING INTO THE CITY RIGHT OF WAY SHALL HAVE SEASONALLY APPROPRIATE BMP'S INSTALLED AND MAINTAINED AT ALL TIMES.

Stabilized Construction Entrance/Exit TC-1

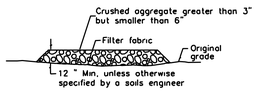

SECTION B-B
NTS

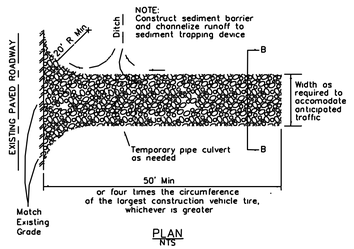

PLAN
NTS

SE-5 Fiber Rolls

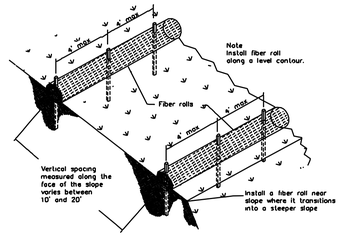

TYPICAL FIBER ROLL INSTALLATION
NTS

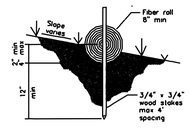

ENTRENCHMENT DETAIL
N.T.S.

Storm Drain Inlet Protection SE-10

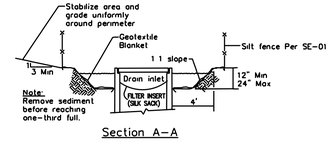

Section A-A

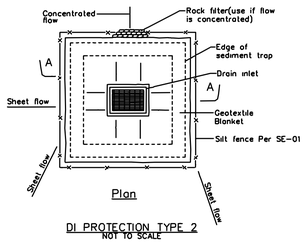

Plan

DI PROTECTION TYPE 2
NOT TO SCALE

Notes
1 For use in cleared and grubbed and in graded areas
2. Shape basin so that longest inflow area faces longest length of trap.
3 For concentrated flows, shape basin in 2 1 ratio with length oriented towards direction of flow.

SE-10 Storm Drain Inlet Protection

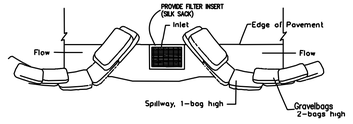

TYPICAL PROTECTION FOR INLET ON SUMP

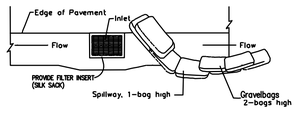

TYPICAL PROTECTION FOR INLET ON GRADE

NOTES:
1. Intended for short-term use
2 Use to inhibit non-storm water flow
3. Allow for proper maintenance and cleanup
4 Bags must be removed after adjacent operation is completed
5 Not applicable in areas with high silts and clays without filter fabric.

DI PROTECTION TYPE 3
NOT TO SCALE

LEGEND

PROVIDE CONSTRUCTION ENTRANCE/EXIT PER DETAIL TC-1

FIBER ROLL BARRIER PER DETAIL SE-5

STORM DRAIN INLET PROTECTION PER DETAIL SE-10

NO.	DESCRIPTION	DATE	BY

p:\proj\ Revisions

Work Accepted: Inspector:

As-Built Corrections

By: _____ Date: _____

Supervised by:
Amanda Joy Musy-Verdel
Registered Civil Engineer
RCE no. 69278
signature 12/4/24 date

REGISTERED PROFESSIONAL ENGINEER * AMANDA JOY MUSY-VERDEL * NO. 69278 * CIVIL * STATE OF CALIFORNIA *

HANNA-BRUNETTI EST. 1910
CIVIL ENGINEERS • LAND SURVEYORS CONSTRUCTION MANAGERS
7651 EIGLEBERRY STREET • GILROY • 95020 • CALIFORNIA
OFFICE (408) 842-2173 • FAX (408) 842-3662
EMAIL: ENGINEERING @ HANNABRUNETTI.COM

DRAWN	DESIGN	HOR.	1"=20'
CHECKED	DATE	VERT	
APPROVED	DATE	AS BUILT	
Scott C Greer – CITY ENGINEER R.C.E. # 58879		JOB NUMBER	20002

CITY OF MORGAN HILL

City of Morgan Hill
Public Works Department
17575 Peak Avenue, Morgan Hill - California - 95037
(408) 776-6480 - fax (408) 779-7236

Erosion Control Plan
215 Tennant Avenue - apn 817-04-059

City File no. PWPR2021-0006
PRINT DATE 2/12/24
SHEET NUMBER C.11 of 15

HB JOB NO. 20002

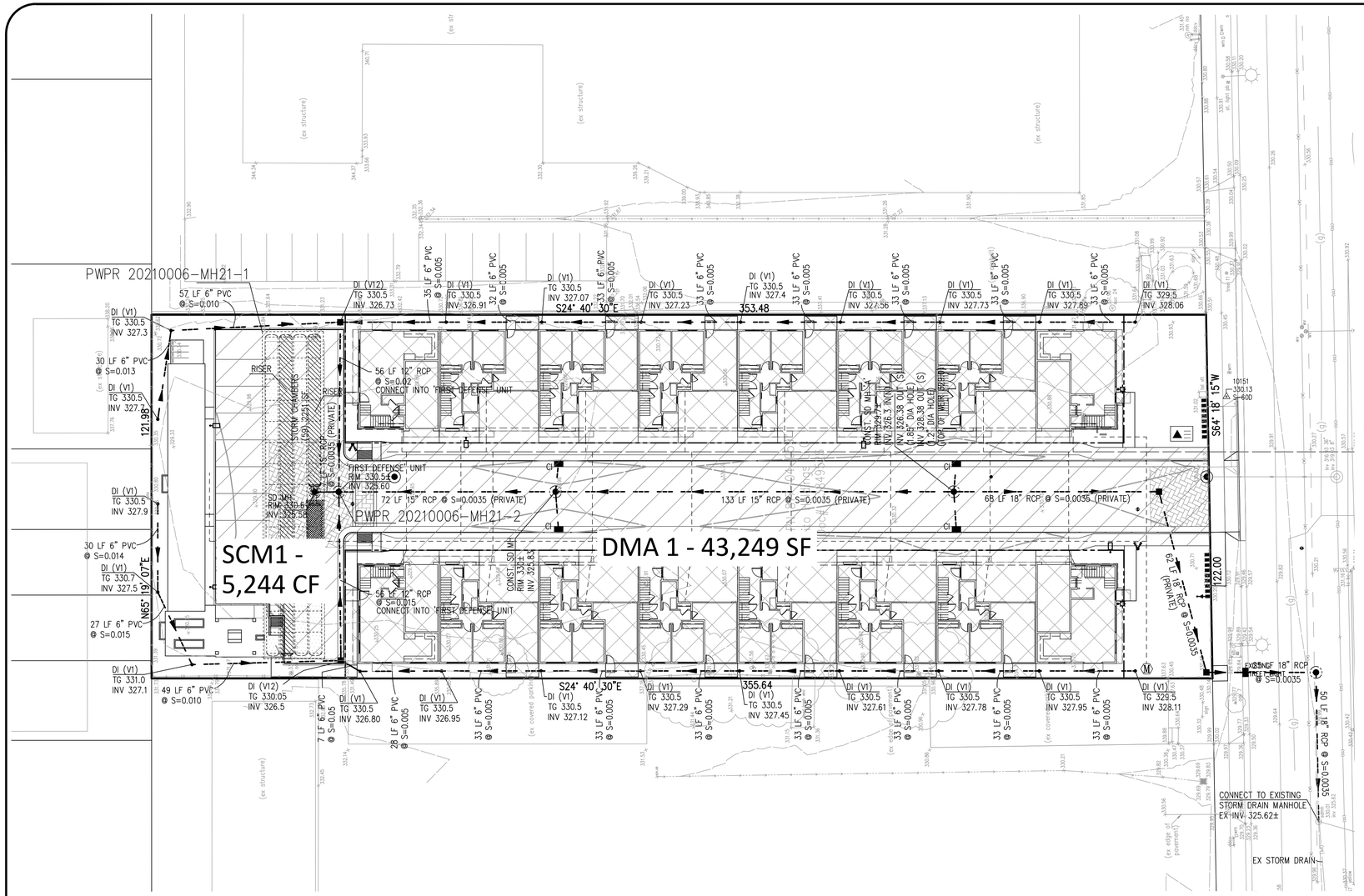

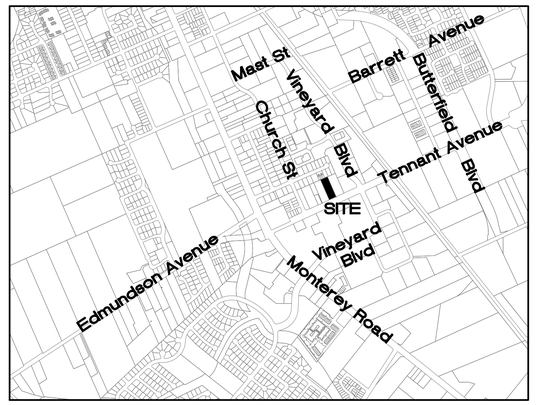

VICINITY MAP
NO SCALE

MAINTENANCE TASK (ROUTINE MAINTENANCE OF INFILTRATION FEATURE)

	FREQUENCY OF TASK
1. REMOVE OBSTRUCTIONS, DEBRIS, AND TRASH FROM INFILTRATION TRENCH AND DISPOSE PROPERLY.	1. MONTHLY, OR AS NEEDED AFTER STORM EVENTS
2. INSPECT TRENCH TO ENSURE THAT IT DRAINS BETWEEN STORMS, AND WITHIN 72 HOURS AFTER RAINFALL. CHECK OBSERVATION 2-3 DAYS AFTER STORM TO CONFIRM DRAINAGE.	2. MONTHLY, DURING WET SEASON, OR AS NEEDED AFTER STORM EVENTS
3. INSPECT FILTER FABRIC FOR SEDIMENT DEPOSITS BY REMOVING A SMALL SECTION OF THE TOP LAYER.	3. ANNUALLY
4. MONITOR OBSERVATION WELL TO CONFIRM THAT TRENCH HAS DRAINED DURING THE DRY SEASON.	4. ANNUALLY, DURING DRY SEASON
5. REMOVE ANY TRASH. GRASS CLIPPINGS AND OTHER DEBRIS FROM THE TRENCH PERIMETER AND DISPOSE OF PROPERLY.	5. AS NEEDED
6. CHECK FOR EROSION AT INFLOW OR OVERFLOW STRUCTURES.	6. AS NEEDED
7. CONFIRM THAT CAP OF OBSERVATION WELL IS SEALED.	7. AT EVERY INSPECTION
8. INSPECT INFILTRATION TRENCH USING THE ATTACHED INSPECTION CHECKLIST.	8. MONTHLY, OR AFTER LARGE STORM EVENTS, AND AFTER REMOVAL OF ACCUMULATED DEBRIS OR MATERIAL
9. FOR MANUFACTURED PRE-TREATMENT DEVICE, FOLLOW MANUFACTURER'S GUIDELINES FOR MAINTENANCE AND CARTRIDGE REPLACEMENT.	9. AS PER MANUFACTURER'S SPECIFICATIONS

SITE DESIGN MEASURES

1. DIRECT RUNOFF FROM ROOFS, SIDEWALKS, PATIOS TO LANDSCAPED AREAS.
2. PARKING: IN TOP OF OR UNDER BUILDING.

SOURCE CONTROL MEASURES

1. COVERED DUMPSTER AREA AND INTERIOR PARKING STRUCTURES DRAIN TO SANITARY SEWER.
2. USE OF WATER EFFICIENT IRRIGATION SYSTEMS.
3. MAINTENANCE (PAVEMENT SWEEPING, CATCH BASIN CLEANING, GOOD HOUSEKEEPING).
4. STORM DRAIN LABELING.

OPERATIONS AND MAINTENANCE

1. RESPONSIBLE PARTY: OSITO HOLDINGS LLC
PO BOX 362
MORGAN HILL, CA

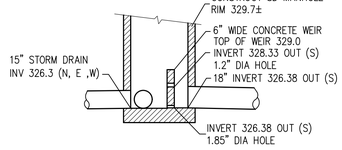

OUTLET STRUCTURE (A)
STORM DRAIN MANHOLE STA 1+40.64
SCALE: 1"=5'

AREA SUMMARY TABLE									
TCM ID	DESCRIPTION OF AREA	TOTAL AREA (SF)	PERVIOUS AREA (SF)	HARDSCAPE/ ROOF (SF)	STORMWATER CONTROL MEASURE	TIER 3 RETENTION REQ'D	TIER 4 RETENTION REQ'D	TOTAL RETENTION REQ'D	RETENTION PROVIDED
DMA 1	ROOF, PARKING LANDSCAPE	43,249	9,844	33,405	PRINSCO HS75	1,111 CF	4,006 CF	5,117 CF	5,244 CF

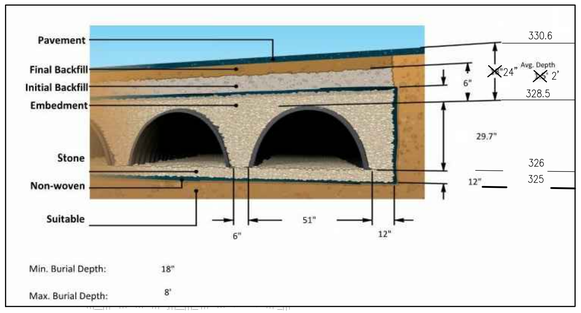

SCM #1 INFILTRATION PIT AND CHAMBER ELEVATIONS DETAIL
NO SCALE

GRAPHIC SCALE
20 0 10 20 40 80
(IN FEET)
1 inch = 20 ft.

NO.	DESCRIPTION	DATE	BY
p:\proj\	Revisions		

Work Accepted: Inspector:
As-Built Corrections
By: Date:

Supervised by: Amanda Joy Musy-Verdel
Registered Civil Engineer
RCE no. 69278
signature 12/4/24 date

HANNA-BRUNETTI EST. 1976
CIVIL ENGINEERS • LAND SURVEYORS
CONSTRUCTION MANAGERS
7651 EIGLEBERRY STREET • GILROY • 95020 • CALIFORNIA
OFFICE (408) 842-2173 • FAX (408) 842-3662
EMAIL: ENGINEERING @ HANNABRUNETTI.COM

DRAWN	DESIGN	HOR. 1"=20'
CHECKED	DATE	VERT
APPROVED	DATE	AS BUILT
Scott C Greer — CITY ENGINEER R.C.E. # 58879		JOB NUMBER 20002

CITY OF MORGAN HILL
City of Morgan Hill
Public Works Department
17575 Peak Avenue, Morgan Hill - California - 95037
(408) 776-6480 - fax (408) 779-7236

Storm Water Control Plan
215 Tennant Avenue - apn 817-04-059

City File no. PWPR2021-0006
PRINT DATE 2/12/24
SHEET NUMBER C.12 of 15

HB JOB NO. 20002

PRINSCO
ENGINEERED WITH INTEGRITY™

TENNANT SQUARE

MORGAN HILL, CA

HYDROSTOR HS75 STORMWATER CHAMBER SYSTEM

STORMWATER CHAMBER SPECIFICATIONS

1. CHAMBERS SHALL BE HYDROSTOR HS75 OR APPROVED EQUIVALENT.
2. CHAMBERS SHALL BE MADE FROM VIRGIN, IMPACT-MODIFIED POLYPROPYLENE COPOLYMERS.
3. CHAMBER ROWS SHALL PROVIDE CONTINUOUS, UNOBSTRUCTED INTERNAL SPACE WITH NO INTERNAL SUPPORT PANELS THAT WOULD IMPEDE FLOW OR LIMIT ACCESS FOR INSPECTION.
4. THE STRUCTURAL DESIGN OF THE CHAMBERS, THE STRUCTURAL BACKFILL, AND THE INSTALLATION REQUIREMENTS SHALL ENSURE THAT THE LOAD FACTORS SPECIFIED IN THE AASHTO LRFD BRIDGE DESIGN SPECIFICATIONS, SECTION 12.12, ARE MET FOR: 1) LONG-DURATION DEAD LOADS AND 2) SHORT-DURATION LIVE LOADS, BASED ON THE AASHTO DESIGN TRUCK WITH CONSIDERATION FOR IMPACT AND MULTIPLE VEHICLE PRESENCES.
5. CHAMBERS SHALL MEET THE REQUIREMENTS OF ASTM F2418, "STANDARD SPECIFICATION FOR POLYPROPYLENE (PP) CORRUGATED WALL STORMWATER COLLECTION CHAMBERS."
6. ONLY CHAMBERS THAT ARE APPROVED BY THE SITE DESIGN ENGINEER WILL BE ALLOWED. THE CHAMBER MANUFACTURER SHALL SUBMIT THE FOLLOWING UPON REQUEST TO THE SITE DESIGN ENGINEER FOR APPROVAL BEFORE DELIVERING CHAMBERS TO THE PROJECT SITE:
   A. A STRUCTURAL EVALUATION SEALED BY A REGISTERED PROFESSIONAL ENGINEER THAT DEMONSTRATES THAT THE SAFETY FACTORS ARE GREATER THAN OR EQUAL TO 1.95 FOR DEAD LOAD AND 1.75 FOR LIVE LOAD, THE MINIMUM REQUIRED BY ASTM F2787 AND BY AASHTO FOR THERMOPLASTIC PIPE.
   B. A STRUCTURAL EVALUATION SEAL BY A REGISTERED PROFESSIONAL ENGINEER THAT DEMONSTRATES THAT THE LOAD FACTORS SPECIFIED IN THE AASHTO LRFD BRIDGE DESIGN SPECIFICATIONS, SECTION 12.12, ARE MET. THE 50 YEAR CREEP MODULUS DATA SPECIFIED IN ASTM F2418 MUST BE USED AS PART OF THE AASHTO STRUCTURAL EVALUATION TO CERTIFY LONG-TERM PERFORMANCE.
   C. STRUCTURAL CROSS SECTION DETAIL ON WHICH THE STRUCTURAL EVALUATION IS BASED.
7. CHAMBERS AND END CAPS SHALL BE PRODUCED AT AN ISO 9001 CERTIFIED MANUFACTURING FACILITY.

NOTES:

1. PRIOR TO BEGINNING INSTALLATION OF HYDROSTOR STORMWATER CHAMBERS, A PRECONSTRUCTION MEETING SHALL BE HELD WITH A PRINSCO REPRESENTATIVE AND THE INSTALLERS.
2. HYDROSTOR STORMWATER CHAMBERS SHALL BE INSTALLED IN ACCORDANCE WITH THE PRINSCO "HYDROSTOR CONSTRUCTION GUIDE."
3. HYDROSTOR STORMWATER CHAMBERS SHALL NOT BE INSTALLED ON WET OR UNSTABLE FOUNDATION OR SUBGRADE. FOUNDATION STONE MUST BE LEVEL AND COMPACTED.
4. PRINSCO RECOMMENDS PRETREATMENT OF STORMWATER RUNOFF USING A PRINSCO STORMWATER QUALITY UNIT AND/OR A SEDIMENT ROW.
5. MAINTAIN MINIMUM SPACING BETWEEN CHAMBERS; 6" FOR HS75 AND 8" FOR HS180.
6. CONSTRUCTION EQUIPMENT SHALL NOT BE SITUATED ATOP THE CHAMBERS UNTIL SUFFICIENT COVER HAS BEEN ACHIEVED. DUMP TRUCKS, RUBBER TIRE LOADERS, EXCAVATORS, WHEEL OR ROLLER LOADS ARE NOT ALLOWED UNTIL PROPER FILL HEIGHTS HAVE BEEN ACHIEVED. REFER TO PRINSCO 'HYDROSTOR CONSTRUCTION GUIDE" FOR SPECIFIC LOADING CRITERIA.
7. EMBEDMENT BACKFILL MUST BE PLACED USING THE FOLLOWING METHODS ONLY:
   - BACKFILL WITH AN EXCAVATOR LOCATED OUTSIDE THE EXCAVATION
   - BACKFILL WITH A STONE SHOOTER LOCATED OUTSIDE THE EXCAVATION
   - BACKFILL AS ROWS ARE BUILT WITH AN EXCAVATOR ON THE SUBGRADE OR FOUNDATION STONE
8. EMBEDMENT BACKFILL SHALL NOT BE PLACED USING THE "DUMP AND PUSH" METHOD. THIS MAY CAUSE DAMAGE TO THE CHAMBERS, WILL RESULT IN IMPROPER INSTALLATION AND WILL VOID THE PRINSCO STANDARD WARRANTY.
9. ONCE SUFFICIENT COVER IS ACHIEVED (12" FOR HS180; 6" FOR HS75), GRADING MAY COMMENCE WITH A SMALL DOZER OR SKID LOADER (LESS THAN 4.5 PSI GROUND PRESSURE). EQUIPMENT SHALL ALWAYS TRAVEL PARALLEL TO CHAMBER ROWS. SEE PRINSCO 'HYDROSTOR CONSTRUCTION GUIDE" FOR SPECIFIC LOADING CRITERIA.

PROJECT INFORMATION:

- PROJECT NUMBER: 21-640
- PRINSCO SALES CONTACT: David Seager: 916-223-9873
- ENGINEER: ----
- CONTRACTOR: ----
- DISTRIBUTOR: ----

THE UNDERSIGNED HEREBY APPROVES THE ATTACHED (8) PAGES

CUSTOMER _____ DATE _____

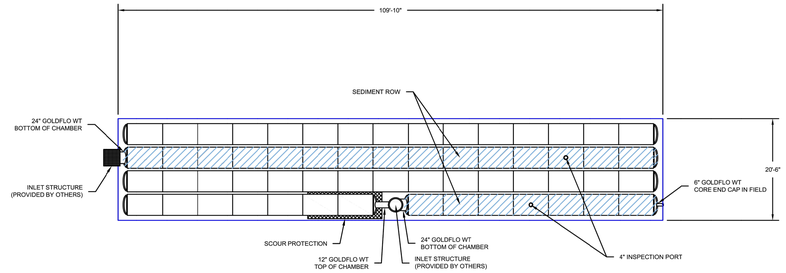

SYSTEM INCLUDES ADDITIONAL STONE.
SEE ELEVATION TABLE FOR MORE INFORMATION

BILL OF MATERIALS

PART	DESCRIPTION	QTY.	PART	DESCRIPTION	QTY.
A1	HYDROSTOR HS75 CHAMBER (HS75C)	59	A2	HYDROSTOR HS75 END CAP (HS75E)	7
A3	HYDROSTOR HS75 END CAP w/ 24" CORED HOLE BOTTOM (HS75E-24HB)	2	A4	HYDROSTOR 24" ADAPTER FOR HS75 ENDCAP (HS75A-24)	2
A5	24GF20NP (FIELD CUT PIPE FOR MANIFOLD)	20'	A6	24" SPLIT COUPLER (SC24)	2
A7	HYDROSTOR HS75 END CAP w/ 12" CORED HOLE TOP (HS75E-12HT)	1	A8	12GF20NP (FIELD CUT PIPE FOR MANIFOLD)	20'
A9	06GF20NP (FIELD CUT PIPE FOR MANIFOLD)	20'			

MINIMUM COVER HEIGHT HAS BEEN INCREASED FROM 18" TO 24" TO SUFFICIENTLY HANDLE H-25 LOADING

TYPICAL ELEVATIONS - HS75 BEDS (ft)

MAXIMUM ALLOWABLE GRADE (TOP OF PAVEMENT/UNPAVED):	336.50
MINIMUM ALLOWABLE GRADE (UNPAVED WITH TRAFFIC):	331.00
MINIMUM ALLOWABLE GRADE (UNPAVED WITH NO TRAFFIC):	330.50
MINIMUM ALLOWABLE GRADE (BASE OF FLEXIBLE PAVEMENT):	330.50
MINIMUM ALLOWABLE GRADE (TOP OF RIGID CONCRETE PAVEMENT):	330.50
TOP OF STONE (MIN):	329.00
TOP OF CHAMBER:	328.50
12" TOP OF CHAMBER (INVERT):	327.13
24" BOTTOM OF CHAMBER (INVERT):	326.04
BOTTOM OF CHAMBER (MIN):	326.00
BOTTOM OF FOUNDATION STONE:	325.00

*BOTTOM OF FOUNDATION STONE INCLUDES AN ADDITIONAL 6" (0.50 FEET) OF STONE.

PROPOSED SYSTEM LAYOUT HS75

INSTALLED SYSTEM VOLUME (ft^3):	5,244
INSTALLED SYSTEM FOOTPRINT (ft^2):	2,251
SYSTEM PERIMETER (ft):	261
TOTAL CHAMBERS:	59
TOTAL END CAPS:	10
STONE REQUIRED (yd^3):	229
NON-WOVEN GEOTEXTILE (yd^2):	739
WOVEN GEOTEXTILE (yd^2):	187

THIS DETAIL DEPICTS RECOMMENDED INSTALLATION PRACTICES AND IS NOT INTENDED TO SUPERSEDE ANY NATIONAL, STATE OR LOCAL SPECIFICATIONS. PRINSCO BEARS NO RESPONSIBILITY FOR ANY ALTERATIONS, REVISION AND/OR DEVIATION FROM THIS STANDARD DETAIL. PRINSCO HAS NOT PERFORMED ANY ENGINEERING OR DESIGN SERVICE FOR THIS PROJECT. THE DESIGN ENGINEER SHALL REVIEW THESE DETAILS PRIOR TO CONSTRUCTION TO VERIFY SUITABILITY. © PRINSCO, INC.

PRINSCO ENGINEERED WITH INTEGRITY — 1717 16TH ST. NE, WILLMAR, MN 56201, www.prinsco.com

TITLE:	TENNANT SQUARE, MORGAN HILL, CA
REV:	C
CHECKED BY: JTC	PRINSCO Sales contact: David Seager: 916-223-9873
DRAWN BY: TJW	DATE: 08-Nov-21
DRAWING NUMBER:	21-640
SCALE: NTS	SHEET: 1 OF 2

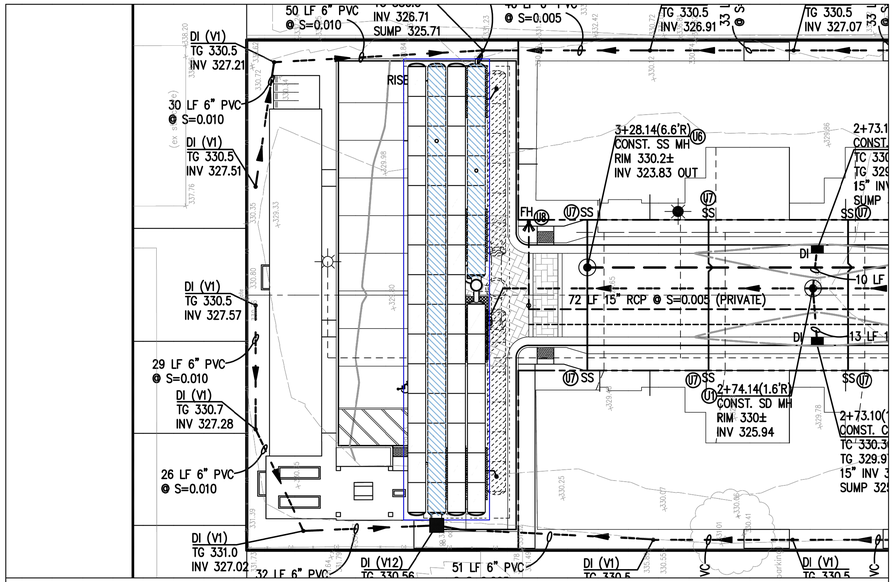

OVERLAY

THIS DETAIL DEPICTS RECOMMENDED INSTALLATION PRACTICES AND IS NOT INTENDED TO SUPERSEDE ANY NATIONAL, STATE OR LOCAL SPECIFICATIONS. PRINSCO BEARS NO RESPONSIBILITY FOR ANY ALTERATIONS, REVISION AND/OR DEVIATION FROM THIS STANDARD DETAIL. PRINSCO HAS NOT PERFORMED ANY ENGINEERING OR DESIGN SERVICE FOR THIS PROJECT. THE DESIGN ENGINEER SHALL REVIEW THESE DETAILS PRIOR TO CONSTRUCTION TO VERIFY SUITABILITY. © PRINSCO, INC.

PRINSCO ENGINEERED WITH INTEGRITY — 1717 16TH ST. NE, WILLMAR, MN 56201, www.prinsco.com

TITLE:	TENNANT SQUARE, MORGAN HILL, CA
REV:	C
CHECKED BY: JTC	PRINSCO Sales contact: David Seager: 916-223-9873
DRAWN BY: TJW	DATE: 08-Nov-21
DRAWING NUMBER:	21-640
SCALE: NTS	SHEET: 2 OF 2

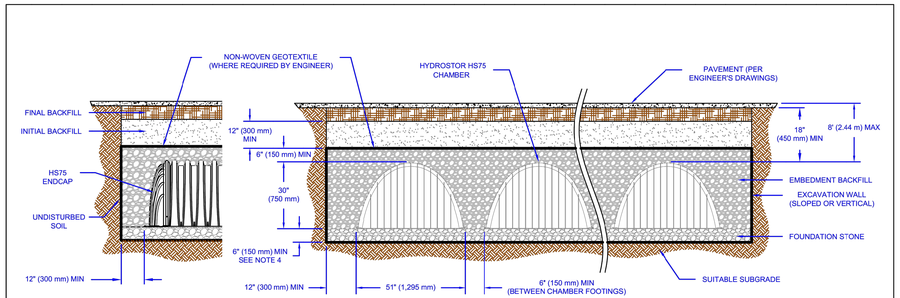

NOTES:

1. HYDROSTOR HS75 CHAMBERS SHALL BE DESIGNED IN ACCORDANCE WITH ASTM F2787 AND SHALL CONFORM TO THE REQUIREMENTS OF ASTM F2418. HS75 CHAMBERS SHALL BE INSTALLED IN ACCORDANCE WITH THE MANUFACTURER'S LATEST INSTALLATION GUIDELINES.
2. **SUBGRADE:** TRENCH BOTTOMS WITH UNSTABLE OR UNYIELDING MATERIAL SHALL BE EXCAVATED TO A DEPTH DIRECTED BY THE ENGINEER AND REPLACED WITH SUITABLE MATERIAL. FOR UNSTABLE MATERIALS, GEOTEXTILE MAY BE USED TO STABILIZE THE TRENCH BOTTOM, IF DIRECTED BY THE ENGINEER. THE DESIGN ENGINEER IS RESPONSIBLE FOR VERIFYING SUBGRADE SUITABILITY.
3. **GEOTEXTILE:** A 4 oz/yd² (136 g/m²) OR HEAVIER NON-WOVEN GEOTEXTILE FILTER FABRIC SHOULD BE USED FOR EMBEDMENT BACKFILL MATERIAL SIZED 3/4 - 1 1/2 INCH (19 - 38 mm). A 6 oz/yd² (203 g/m²) NON-WOVEN GEOTEXTILE FILTER FABRIC SHOULD BE USED FOR EMBEDMENT BACKFILL MATERIAL SIZED 1 1/2 - 2 INCH (38 - 51 mm). GEOTEXTILE FILTER FABRIC IS PLACED AROUND THE SYSTEM TO PREVENT NATIVE SOIL FROM MIGRATING INTO THE EMBEDMENT BACKFILL MATERIAL. TO ENSURE FABRIC IS SUITABLE WITH IN SITU SOILS, A GEOTECHNICAL ENGINEER SHOULD BE CONSULTED.
4. **FOUNDATION STONE:** SUITABLE MATERIAL SHALL BE A 3/4 - 2 INCH (19 - 51 mm), WASHED, CRUSHED ANGULAR STONE, OR AASHTO M43 SIZES (3, 357, 4, 467, 5, 56, 57) WITH WASHED, CRUSHED, ANGULAR STONE ADDED TO THE GRADATION, e.g., WASHED, CRUSHED, ANGULAR #3 (AASHTO M43) STONE. MINIMUM FOUNDATION STONE THICKNESS TO BE DETERMINED BY DESIGN ENGINEER. MINIMUM OF 6" (150 mm) RECOMMENDED. REFER TO PRINSCO DESIGN MANUAL FOR ADDITIONAL GUIDANCE. COMPACTION SHOULD BE DONE IN LIFTS OF NO MORE THAN 6 INCHES (150 mm) TO A DENSITY OF 95% STANDARD PROCTOR DENSITY.
5. **EMBEDMENT BACKFILL:** SUITABLE MATERIAL SHALL BE A 3/4 - 2 INCH (19 - 51 mm), WASHED, CRUSHED ANGULAR STONE, OR AASHTO M43 SIZES (3, 357, 4, 467, 5, 56, 57) WITH WASHED, CRUSHED, ANGULAR STONE ADDED TO THE GRADATION, e.g., WASHED, CRUSHED, ANGULAR #3 (AASHTO M43) STONE. EMBEDMENT BACKFILL SHALL EXTEND FROM TOP OF BEDDING TO NOT LESS THAN 6" (150 mm) INCHES ABOVE THE TOP OF THE CHAMBER. NO COMPACTION IS REQUIRED BUT AN EFFORT SHOULD BE MADE TO HAND KNIFE STONE IN BETWEEN ALL CORRUGATIONS.
6. **INITIAL BACKFILL:** SUITABLE MATERIAL SHALL BE A GRANULAR, WELL GRADED SOIL WITH LESS THAN 35% FINES OR AASHTO M43 SIZES (3, 357, 4, 467, 5, 56, 57, 6, 67, 68, 7, 78, 8, 89, 9, 10). MOST PAVEMENT SUBBASE MATERIALS FALL WITHIN THIS GRADING CRITERIA. INITIAL BACKFILL SHALL EXTEND FROM TOP OF EMBEDMENT BACKFILL TO NOT LESS THAN 18 INCHES (450 mm) ABOVE THE TOP OF THE CHAMBER. COMPACT TO A MINIMUM OF 95% STANDARD PROCTOR DENSITY.
7. **FINAL BACKFILL:** SUITABLE MATERIALS SHALL BE ANY SOIL DIRECTED BY THE ENGINEER. FINAL BACKFILL SHALL EXTEND FROM TOP OF INITIAL BACKFILL TO NO MORE THAN 8 FEET (2.44 m) ABOVE THE TOP OF THE CHAMBER. COMPACTION LEVELS SHOULD FOLLOW ENGINEERS RECOMMENDATIONS.
8. **MINIMUM COVER:** FOR TRAFFIC APPLICATIONS A MINIMUM COVER OF 18 INCHES (450 mm) IS REQUIRED, MEASURED FROM THE TOP OF THE CHAMBER TO THE BOTTOM OF FLEXIBLE PAVEMENT OR TO THE TOP OF RIGID PAVEMENT. FOR UNPAVED INSTALLATIONS WHERE RUTTING MAY OCCUR, INCREASE COVER TO 24 INCHES (600 mm). ADDITIONAL COVER MAY BE REQUIRED FOR CONSTRUCTION LOADS.
9. **MAXIMUM COVER:** A COVER HEIGHT OF OVER 8 FEET (2.44 m) IS NOT RECOMMENDED. COVER HEIGHT IS MEASURED FROM THE TOP OF THE CHAMBER TO THE TOP OF THE PAVEMENT
10. **LOAD RATING:** HS75 CHAMBERS ARE TRAFFIC RATED FOR H-20 VEHICLES WITH ADDITIONAL CONSIDERATION FOR LANE LOADING, COMMONLY REFERRED TO AS HL-93 LOAD RATING (AASHTO DESIGN TRUCK).

THIS DETAIL DEPICTS RECOMMENDED INSTALLATION PRACTICES AND IS NOT INTENDED TO SUPERSEDE ANY NATIONAL, STATE OR LOCAL SPECIFICATIONS. PRINSCO BEARS NO RESPONSIBILITY FOR ANY ALTERATIONS, REVISION AND/OR DEVIATION FROM THIS STANDARD DETAIL. PRINSCO HAS NOT PERFORMED ANY ENGINEERING OR DESIGN SERVICE FOR THIS PROJECT. THE DESIGN ENGINEER SHALL REVIEW THESE DETAILS PRIOR TO CONSTRUCTION TO VERIFY SUITABILITY. © PRINSCO, INC.

PRINSCO WATER MANAGEMENT SOLUTIONS — 1717 16TH ST. NE, WILLMAR, MN 56201, www.prinsco.com

TITLE:	HYDROSTOR HS75 - CROSS SECTION
DRAWN BY: TJW	DATE: 22-Apr-20
DRAWING NUMBER:	D-7-300A
SCALE: NTS	SHEET: 1 OF 1

NO.	DESCRIPTION	DATE	BY

p:\proj\ Revisions

Work Accepted: Inspector:

As-Built Corrections

By: _____ Date: _____

Supervised by:
Amanda Joy Musy-Verdel
Registered Civil Engineer
RCE no. 69278

signature 12/4/24 date

REGISTERED PROFESSIONAL ENGINEER — AMANDA JOY MUSY-VERDEL — NO. 69278 — CIVIL — STATE OF CALIFORNIA

HANNA-BRUNETTI EST. 1910
CIVIL ENGINEERS • LAND SURVEYORS
CONSTRUCTION MANAGERS
7651 EIGLEBERRY STREET • GILROY • 95020 • CALIFORNIA
OFFICE (408) 842-2173 • FAX (408) 842-3662
EMAIL: ENGINEERING @ HANNABRUNETTI.COM

DRAWN	DESIGN	HOR.	1"=20'
CHECKED	DATE	VERT	
APPROVED	DATE	AS BUILT	
Scott C Greer CITY ENGINEER R.C.E. # 58879		JOB NUMBER	20002

CITY OF MORGAN HILL

City of Morgan Hill
Public Works Department
17575 Peak Avenue, Morgan Hill - California - 95037
(408) 776-6480 - fax (408) 779-7236

Stormtech Details
215 Tennant Avenue - apn 817-04-059

City File no. PWPR2021-0006
PRINT DATE
SHEET NUMBER C.13 of 15

HB JOB NO. 20002

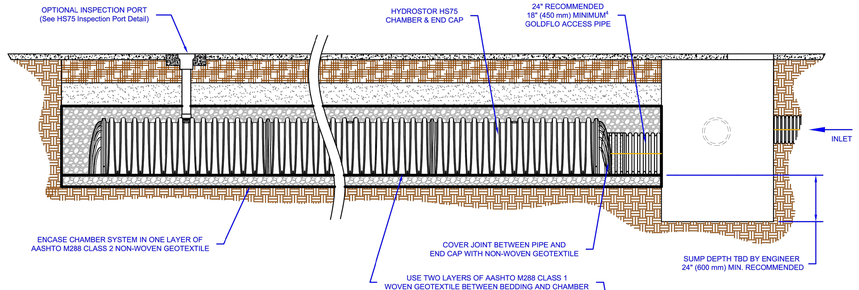

NOTES:

1. HYDROSTOR HS75 CHAMBERS SHALL BE DESIGNED IN ACCORDANCE WITH ASTM F2787 AND SHALL CONFORM TO THE REQUIREMENTS OF ASTM F2418. HS75 CHAMBERS SHALL BE INSTALLED IN ACCORDANCE WITH THE MANUFACTURER'S LATEST INSTALLATION GUIDELINES.
2. **GEOTEXTILE:** TWO DIFFERENT GEOTEXTILES WILL BE USED IN CREATING A FUNCTIONING SEDIMENT ROW. TO ENSURE FABRIC IS SUITABLE WITH IN SITU SOILS, A GEOTECHNICAL ENGINEER SHOULD BE CONSULTED.
   - A NON-WOVEN GEOTEXTILE FILTER FABRIC 4 oz/yd² (136 g/m²) OR HEAVIER SHOULD BE USED AROUND THE PERIMETER OF THE CHAMBER SYSTEM FOR EMBEDMENT BACKFILL MATERIAL SIZED 3/4 - 1 1/2 INCH (19 - 38 mm). A 6 oz/yd² (203 g/m²) NON-WOVEN GEOTEXTILE FILTER FABRIC SHOULD BE USED FOR EMBEDMENT BACKFILL MATERIAL SIZED 1 1/2 - 2 INCH (38 - 51 mm). GEOTEXTILE FILTER FABRIC IS PLACED AROUND THE SYSTEM TO PREVENT NATIVE SOIL FROM MIGRATING INTO THE EMBEDMENT BACKFILL MATERIAL.
   - TWO LAYERS OF 6 oz/yd² (203 g/m²) WOVEN FABRIC IS PLACED BETWEEN THE BEDDING AND THE CHAMBER FOR THE CREATION OF THE SEDIMENT ROW. THE TWO LAYERS PROVIDE A PROTECTIVE BARRIER FOR THE EMBEDMENT BACKFILL BUT STILL ALLOWING WATER TO INFILTRATE INTO THE SYSTEM. THE WOVEN GEOTEXTILE IS DURABLE ENOUGH TO ALLOW JETTING TO CLEAN THE SEDIMENT ROW.
3. **INSPECTION AND MAINTENANCE**: INSPECTION OF THE SYSTEM SHOULD OCCUR BIANNUALLY TO ENSURE LARGE AMOUNTS OF SEDIMENT OR DEBRIS HAVE NOT BEEN DEPOSITED IN THE SEDIMENT ROW. DURING THE FIRST YEAR, INSPECTION SHOULD OCCUR MORE FREQUENTLY DUE TO CONSTRUCTION SEDIMENT LOADING. TO CLEAN THE SYSTEM, A JET/VAC PROCESS CAN BE USED TO REMOVE SEDIMENT AND DEBRIS FROM THE SEDIMENT ROW. FOR MORE INFORMATION, REFER TO PRINSCO'S "RETENTION/DETENTION CLEANING AND MAINTENANCE" TECHNICAL NOTE.
4. **ACCESS PIPE**: PRINSCO RECOMMENDS A 24 INCH (600 mm) DIAMETER ACCESS PIPE TO THE SEDIMENT ROW. A 24 INCH (600 mm) INTERNAL SLEEVE ADAPTER (PART # HS75A-24) WILL BE REQUIRED TO CONNECT TO HS75 END CAPS. CONTACT YOUR LOCAL SALES REPRESENTATIVE WITH ANY QUESTIONS.

THIS DETAIL DEPICTS RECOMMENDED INSTALLATION PRACTICES AND IS NOT INTENDED TO SUPERSEDE ANY NATIONAL, STATE OR LOCAL SPECIFICATIONS. PRINSCO BEARS NO RESPONSIBILITY FOR ANY ALTERATIONS, REVISION AND/OR DEVIATION FROM THIS STANDARD DETAIL. PRINSCO HAS NOT PERFORMED ANY ENGINEERING OR DESIGN SERVICE FOR THIS PROJECT. THE DESIGN ENGINEER SHALL REVIEW THESE DETAILS PRIOR TO CONSTRUCTION TO VERIFY SUITABILITY. © PRINSCO, INC.

PRINSCO WATER MANAGEMENT SOLUTIONS
1717 16TH ST. NE
WILLMAR, MN 56201
www.prinsco.com

TITLE: HYDROSTOR HS75 - SEDIMENT ROW			
DRAWN BY: TJW	DATE: 13-Apr-21	DRAWING NUMBER: D-7-302	
SCALE: NTS	SHEET: 1 OF 1		

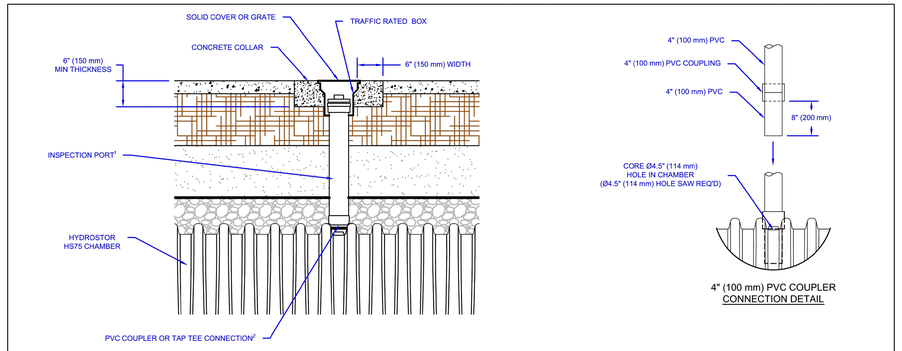

4" (100 mm) PVC COUPLER
CONNECTION DETAIL

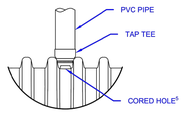

4" (100 mm) TAP TEE
CONNECTION DETAIL
(SEE NOTE 1)

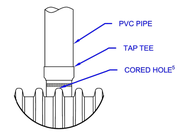

6" (150 mm) & 8" (200 mm) TAP TEE
CONNECTION DETAIL
(SEE NOTE 1)

NOTES:

1. 4" (100 mm) INSPECTION PORTS MAY BE CONNECTED THROUGH ANY CHAMBER CIRCULAR CUT OUT POINT, LOCATED AT THE CENTER OF EACH HS75 CHAMBER. 6" (150 mm) OR 8" (200 mm) INSPECTION PORTS MAY BE CONNECTED THROUGH A CORED HOLE, CENTERED ON A CORRUGATION.
2. TAP TEE CONNECTION CAN CONSIST OF QWICKSEAL, INSERTA TEE OR APPROVED ENGINEERING EQUIVALENT.
3. ALL PVC FITTINGS TO BE SOLVENT CEMENTED.
4. PVC MAY BE EITHER SDR 35 OR SCH 40
5. CORED HOLE SIZES AS FOLLOWS: 4" (100 mm) CUT TO 5" (125 mm); 6" (150 mm) CUT TO 7" (180 mm); 8" (200 mm) CUT TO 9" (230 mm)

THIS DETAIL DEPICTS RECOMMENDED INSTALLATION PRACTICES AND IS NOT INTENDED TO SUPERSEDE ANY NATIONAL, STATE OR LOCAL SPECIFICATIONS. PRINSCO BEARS NO RESPONSIBILITY FOR ANY ALTERATIONS, REVISION AND/OR DEVIATION FROM THIS STANDARD DETAIL. PRINSCO HAS NOT PERFORMED ANY ENGINEERING OR DESIGN SERVICE FOR THIS PROJECT. THE DESIGN ENGINEER SHALL REVIEW THESE DETAILS PRIOR TO CONSTRUCTION TO VERIFY SUITABILITY. © PRINSCO, INC.

PRINSCO ENGINEERED WITH INTEGRITY
1717 16TH ST. NE
WILLMAR, MN 56201
www.prinsco.com

TITLE: HYDROSTOR HS75 - INSPECTION PORT			REV:
DRAWN BY: ARB	DATE: 23-Jul-18	DRAWING NUMBER: D-7-303	
SCALE: NTS	SHEET: 1 OF 1		

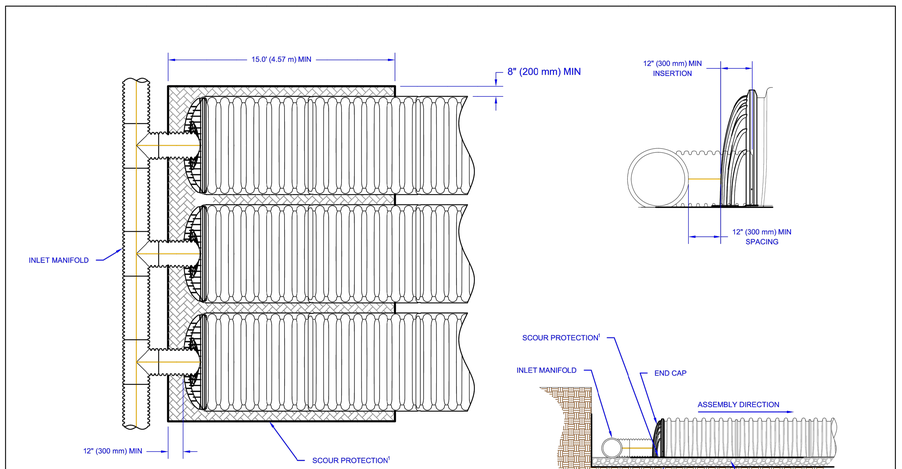

NOTES:

1. SCOUR PROTECTION SHOULD USE A MIN 6 oz/yd² (203 g/m²) WOVEN GEOTEXTILE. GEOTEXTILE SHOULD MEET AASHTO M288 CLASS 1 SPECIFICATION.
2. SCOUR PROTECTION IS ONLY NEEDED WITH CHAMBER ROWS CONNECTED TO THE INLET MANIFOLD.

THIS DETAIL DEPICTS RECOMMENDED INSTALLATION PRACTICES AND IS NOT INTENDED TO SUPERSEDE ANY NATIONAL, STATE OR LOCAL SPECIFICATIONS. PRINSCO BEARS NO RESPONSIBILITY FOR ANY ALTERATIONS, REVISION AND/OR DEVIATION FROM THIS STANDARD DETAIL. PRINSCO HAS NOT PERFORMED ANY ENGINEERING OR DESIGN SERVICE FOR THIS PROJECT. THE DESIGN ENGINEER SHALL REVIEW THESE DETAILS PRIOR TO CONSTRUCTION TO VERIFY SUITABILITY. © PRINSCO, INC.

PRINSCO ENGINEERED WITH INTEGRITY
1717 16TH ST. NE
WILLMAR, MN 56201
www.prinsco.com

TITLE: HYDROSTOR HS75 - SCOUR PROTECTION			REV:
DRAWN BY: TSS	DATE: 11-Oct-18	DRAWING NUMBER: D-7-307	
SCALE: NTS	SHEET: 1 OF 1		

HydroStor HS75

Chamber Specifications	
Chamber Size (L x W x H)	87.1" x 51.0" x 29.7" (2,212 x 1,295 x 754 mm)
Installed Length	84.9" (2,155 mm)
Chamber Storage	46.4 ft³ (1.31 m³)
Min. Installed Storage*	74.9 ft³ (2.12m³)
Weight / Chamber	70 lbs (32 kg)
Chambers / Pallet	33
Approx. Weight / Pallet	2,500 lbs (1,134 kg)

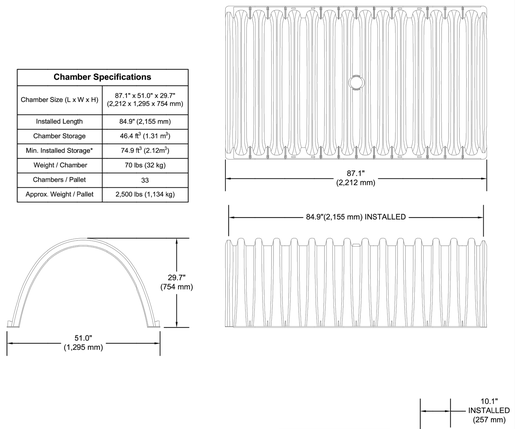

End Cap Specifications	
End Cap Size (L x W x H)	11.6" x 48.1" x 29.4" (295 x 1,222 x 747 mm)
Installed Length	10.1" (257 mm)
End Cap Storage	2.75 ft³ (0.08 m³)
Min. Installed Storage*	13.90 ft³ (0.39 m³)
Weight	12 lbs (5.44 kg)

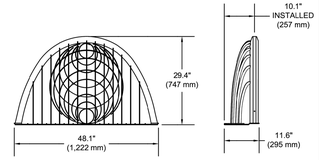

*ASSUMES 6" (150 mm) STONE ABOVE CHAMBERS/END CAPS, 6" (150 mm) OF STONE FOR FOUNDATION STONE, 6" (150 mm) OF STONE BETWEEN CHAMBERS/END CAPS, 12" (300 mm) OF STONE PERIMETER IN FRONT OF END CAPS AND 40% STONE POROSITY.

THIS DETAIL DEPICTS RECOMMENDED INSTALLATION PRACTICES AND IS NOT INTENDED TO SUPERSEDE ANY NATIONAL, STATE OR LOCAL SPECIFICATIONS. PRINSCO BEARS NO RESPONSIBILITY FOR ANY ALTERATIONS, REVISION AND/OR DEVIATION FROM THIS STANDARD DETAIL. PRINSCO HAS NOT PERFORMED ANY ENGINEERING OR DESIGN SERVICE FOR THIS PROJECT. THE DESIGN ENGINEER SHALL REVIEW THESE DETAILS PRIOR TO CONSTRUCTION TO VERIFY SUITABILITY. © PRINSCO, INC.

PRINSCO WATER MANAGEMENT SOLUTIONS
1717 16TH ST. NE
WILLMAR, MN 56201
www.prinsco.com

TITLE: HYDROSTOR HS75 - SPECIFICATION			
DRAWN BY: TJW	DATE: 04-Sep-20	DRAWING NUMBER: D-7-301	
SCALE: NTS	SHEET: 1 OF 1		

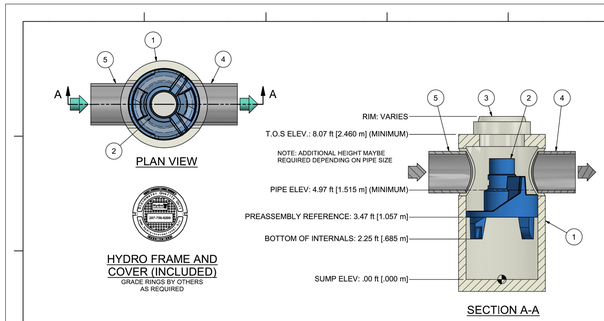

PRODUCT SPECIFICATION:

1. Peak Hydraulic Flow: 18.0 cfs (510 l/s)
2. Min Sediment Storage Capacity: 0.7 cu. yd. (0.5 cu. m.)
3. Maximum Inlet/Outlet Pipe Diameters: 24 in. (600 mm)
4. The Treatment System Shall Use An Induced Vortex To Separate Pollutants From Stormwater Runoff.
5. For More Product Information Including Regulatory Acceptances, Please Visit https://hydro-int.com/en/products/first-defense

GENERAL NOTES:

1. General Arrangement drawings only. Contact Hydro International for site specific drawings.
2. The diameter of the inlet and outlet pipes may be no more than 24".
3. Multiple inlet pipes possible (refer to project plan).
4. Inlet/outlet pipe angle can vary to align with drainage network (refer to project plan.s)
5. Peak flow rate and minimum height limited by available cover and pipe diameter.
6. Larger sediment storage capacity may be provided with a deeper sump depth.

PARTS LIST				
ITEM	QTY	SIZE (in)	SIZE (mm)	DESCRIPTION
1	1	48	1200	I.D. PRECAST MANHOLE
2	1			INTERNAL COMPONENTS (PRE-INSTALLED)
3	1	30	750	FRAME AND COVER (ROUND)
4	1	24 (MAX)	600 (MAX)	OUTLET PIPE (BY OTHERS)
5	1	24 (MAX)	600 (MAX)	INLET PIPE (BY OTHERS)

1. MANHOLE WALL AND SLAB THICKNESSES ARE NOT TO SCALE.
2. CONTACT HYDRO INTERNATIONAL FOR A BOTTOM OF STRUCTURE ELEVATION PRIOR TO SETTING FIRST DEFENSE MANHOLE.
3. CONTRACTOR TO CONFIRM RIM, PIPE INVERTS, PIPE DIA. AND PIPE ORIENTATION PRIOR TO RELEASE OF UNIT TO FABRICATION.

PROJECTION

IF IN DOUBT ASK

DATE: 10/7/2019	SCALE: 1:30
DRAWN BY: ER	ENGINEER BY: MRJ
APPROVED BY:	

A-R DIAMETER
FIRST DEFENSE

GENERAL ARRANGEMENT

Hydro International
hydro-int.com
HYDRO INTERNATIONAL

WEIGHT: 19448 lbmass	MATERIAL:
STOCK NUMBER:	
DRAWING NO.: FD GA-4	
SHEET SIZE: B	SHEET: 1 OF 1

Rev: -

NO.	DESCRIPTION	DATE	BY

p:\proj\ Revisions

Work Accepted: Inspector:

As-Built Corrections

By: _____ Date: _____

Supervised by: Amanda Joy Musy-Verdel
Registered Civil Engineer
RCE no. 69278
Amanda Joy Musy-Verdel 12/4/24
signature date

REGISTERED PROFESSIONAL ENGINEER AMANDA JOY MUSY-VERDEL NO. 69278 CIVIL STATE OF CALIFORNIA

HANNA-BRUNETTI EST. 1910
CIVIL ENGINEERS • LAND SURVEYORS
CONSTRUCTION MANAGERS
7651 EIGLEBERRY STREET • GILROY • 95020 • CALIFORNIA
OFFICE (408) 842-2173 • FAX (408) 842-3662
EMAIL: ENGINEERING @ HANNABRUNETTI.COM

DRAWN	DESIGN	HOR. 1"=20'
CHECKED	DATE	VERT
APPROVED	DATE	AS BUILT
Scott C Greer CITY ENGINEER R.C.E. # 58879		JOB NUMBER 20002

City of Morgan Hill
Public Works Department
17575 Peak Avenue, Morgan Hill - California - 95037
(408) 776-6480 - fax (408) 779-7236

Stormtech Details
215 Tennant Avenue - apn 817-04-059

City File no. PWPR2021-0006
PRINT DATE
SHEET NUMBER C.14 of 15

HB JOB NO. 20002

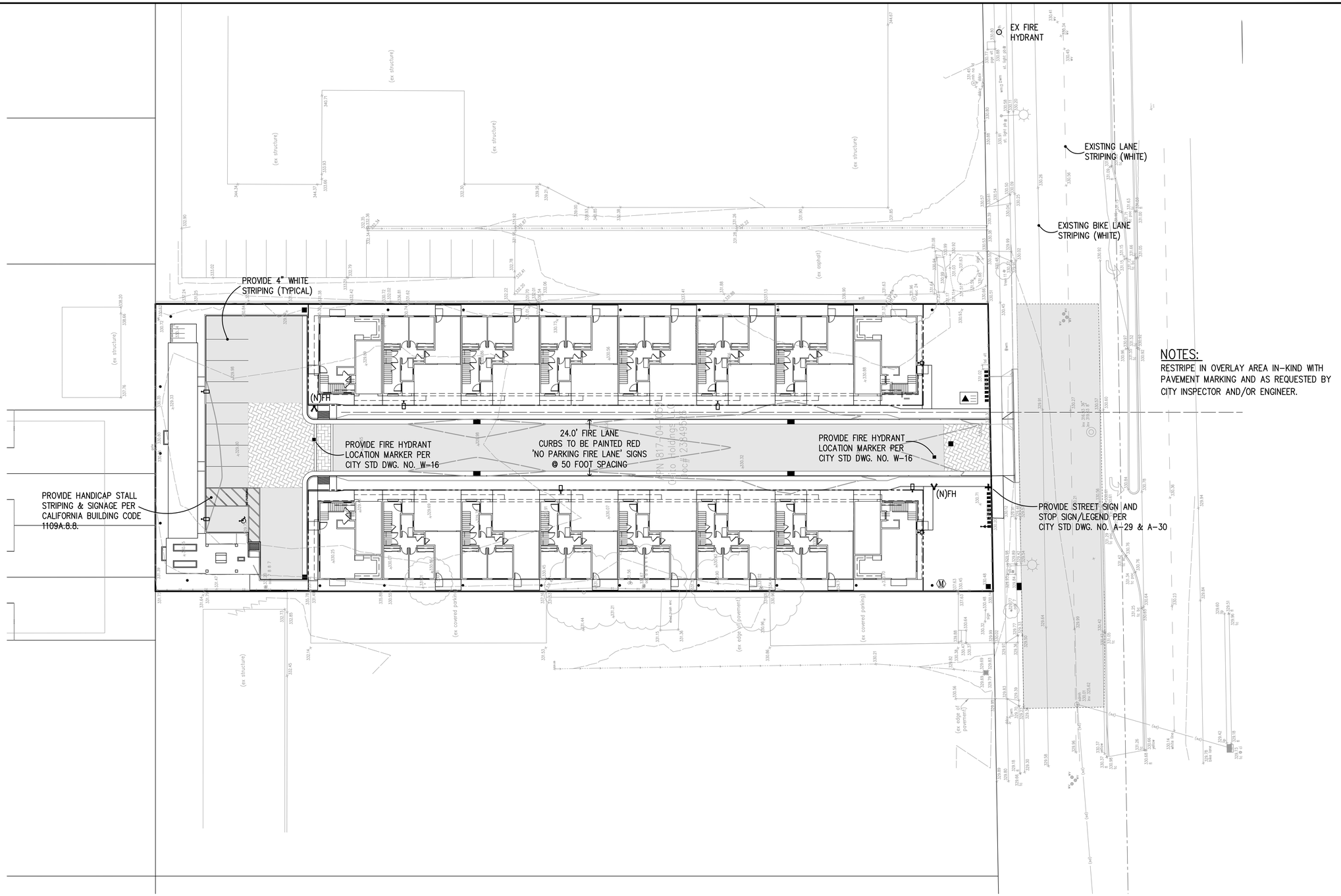

NOTES:

RESTRIPE IN OVERLAY AREA IN-KIND WITH PAVEMENT MARKING AND AS REQUESTED BY CITY INSPECTOR AND/OR ENGINEER.

GRAPHIC SCALE

20 0 10 20 40 80

(IN FEET)
1 inch = 20 ft.

NO.	DESCRIPTION	DATE	BY

p:\proj\ Revisions

Work Accepted: Inspector:

As-Built Corrections

By: Date:

Supervised by:
Amanda Joy Musy-Verdel
Registered Civil Engineer
RCE no. 69278

signature 12/4/24 date

REGISTERED PROFESSIONAL ENGINEER AMANDA JOY MUSY-VERDEL NO. 69278 CIVIL STATE OF CALIFORNIA

HANNA-BRUNETTI EST. 1910
CIVIL ENGINEERS • LAND SURVEYORS CONSTRUCTION MANAGERS
7651 EIGLEBERRY STREET • GILROY • 95020 • CALIFORNIA
OFFICE (408) 842-2173 • FAX (408) 842-3662
EMAIL: ENGINEERING @ HANNABRUNETTI.COM

DRAWN	DESIGN	HOR 1"=20'
CHECKED	DATE	VERT
APPROVED	DATE	AS BUILT
Scott C Creer – CITY ENGINEER R.C.E. # 58879		JOB NUMBER 20002

City of Morgan Hill
Public Works Department
17575 Peak Avenue, Morgan Hill - California - 95037
(408) 776-6480 - fax (408) 779-7236

Striping & Signage Plan

Tennant Square

City File no. PWPR2021-0006
PRINT DATE 5/25/23
SHEET NUMBER C.15 of 15

HB JOB NO. 20002

JOINT TRENCH COMPOSITE PLAN

TENNANT GARDENS

* 16 CONDOMINIUMS *

MORGAN HILL CALIFORNIA

GENERAL NOTES

THIS PLAN SET WAS PREPARED UTILIZING PLANS & ELECTRONIC FILES RECEIVED FROM Hanna-Brunetti, DATED Email, RECEIVED 1-30-24.

1. THESE PLANS AND SPECIFICATIONS SHALL BE CONSIDERED TO BE COMPLIMENTARY TO EACH OTHER. ANYTHING SHOWN ON THE PLANS AND NOT MENTIONED IN THE SPECIFICATIONS, OR MENTIONED IN THE SPECIFICATIONS AND NOT SHOWN ON THE PLANS, SHALL BE OF LIKE EFFECT AS IF SHOWN ON OR MENTIONED IN BOTH. IF DISCREPANCIES ARE FOUND, NOTIFY LIGHTHOUSE DESIGN, INC. PRIOR TO COMMENCING WORK.
2. IN THE EVENT OF ANY DISAGREEMENTS OR DISPUTES OVER THE INSTALLATION, DESIGNS OR PLANS, THE REQUIREMENTS AND SPECIFICATIONS OF THE GOVERNING AGENCY OR THEIR INSPECTORS SHALL TAKE PRECEDENCE.
3. THE CONTRACTOR SHALL PERFORM ALL TRENCHING, EXCAVATING, BACKFILLING AND ALL OTHER WORK AS SHOWN OR NOTED ON THESE PLANS AND BID DOCUMENTS.
4. THE TRENCH AND CONDUIT LAYOUTS ARE SHOWN SCHEMATICALLY. THE CONTRACTOR SHALL INSTALL ALL UTILITY VAULTS, PADS, CONDUIT, ETC. IN PROPER RELATION TO FINAL GRADE. VERIFY ALL SUBSTRUCTURE EXCAVATION DIMENSIONS WITH SUPPLIERS.
5. THE QUANTITIES SHOWN ON THESE PLANS ARE ONLY AN ESTIMATE OF WHAT WILL ACTUALLY BE NEEDED TO COMPLETE THE JOINT TRENCH CONSTRUCTION. FINAL QUANTITIES MAY VARY ACCORDING TO ADDITIONS, CHANGES, OMISSIONS OR DELETIONS FROM THE ORIGINAL PLANS.
6. ALL JOINT TRENCH CONSTRUCTION WORK SHALL BE IN ACCORDANCE WITH THE CURRENT STANDARD PRACTICES AND SPECIFICATIONS OF EACH PARTICIPATING UTILITY COMPANY AND CONFORM TO THE CURRENTLY ADOPTED EDITIONS OF THE STANDARD PLANS AND SPECIFICATIONS OF THE CITY OR COUNTY INVOLVED.
7. THE CONTRACTOR SHALL COMPLY WITH ALL APPLICABLE CONSTRUCTION SAFETY STANDARDS OF THE DIVISION OF INDUSTRIAL SAFETY OF THE STATE OF CALIFORNIA AND WITH O.S.H.A. REQUIREMENTS.
8. ALL WORK IS SUBJECT TO INSPECTION AND SATISFACTION OF EACH PARTICIPATING UTILITY AND CITY OR COUNTY INSPECTORS. THE CONTRACTOR SHALL GIVE AT LEAST A 2 WORKING DAY NOTICE FOR ANY INSPECTIONS.
9. THE PARTICIPATING UTILITY COMPANIES, SOILS ENGINEER AND/OR CITY/COUNTY SHALL APPROVE THE BACKFILL MATERIAL PRIOR TO CONSTRUCTION. CONSULT LOCAL AGENCIES FOR COMPACTION METHODS.
10. THE CONTRACTOR SHALL OBTAIN ALL NECESSARY PERMITS PRIOR TO COMMENCING WORK.
11. IT IS THE CONTRACTORS RESPONSIBILITY TO HAVE ALL INSTALLATIONS INSPECTED PRIOR TO ANY BACKFILLING. NO BACKFILLING SHALL BE PERFORMED UNLESS THE INSPECTOR IS PRESENT OR PRIOR APPROVAL OR CONSENT HAS BEEN RECEIVED BY THE INSPECTOR.
12. IT IS THE CONTRACTORS RESPONSIBILITY TO COORDINATE CONSTRUCTION WITH ALL PARTICIPATING UTILITY AGENCIES AND GIVE AT LEAST 2 WORKING DAYS NOTICE FOR INSTALLATION OF FACILITIES.
13. THE BOTTOM OF ALL TRENCHES SHALL BE CLEARED OF ROCKS AND OTHER HARD SURFACE MATERIAL. A SAND BEDDING OF AT LEAST 2" (TWO INCHES) SHALL BE PROVIDED ON WHICH THE UTILITIES WILL BE PLACED, (MAY NOT BE REQUIRED IN NATIVE SAND AREAS).
14. THE LOCATION OF EXISTING UNDERGROUND UTILITIES ARE SHOWN IN THEIR APPROXIMATE LOCATIONS BASED UPON RECORD INFORMATION PROVIDED TO LIGHTHOUSE DESIGN, INC. AT THE TIME OF PLAN PREPARATION. THEIR LOCATIONS HAVE NOT BEEN FIELD VERIFIED AND NO GUARANTEE IS MADE TO THE ACCURACY OF THE INFORMATION SHOWN. IT IS THE CONTRACTORS RESPONSIBILITY TO VERIFY THE PRECISE LOCATIONS OF ALL UNDERGROUND FACILITIES PRIOR TO COMMENCING WORK. CONTACT (U.S.A.) UNDERGROUND SERVICE ALERT AT LEAST 2 WORKING DAYS PRIOR TO STARTING CONSTRUCTION. CALL 811 or (800) 227-2600 FOR NORTHERN CALIFORNIA AND NEVADA AND 811 or (800) 422-4133 FOR SOUTHERN CALIFORNIA.
15. THE CONTRACTOR SHALL NOTIFY LIGHTHOUSE DESIGN, INC. OF ANY DIFFERENCES IN THE LOCATION OF EXISTING UTILITIES FROM THAT SHOWN, OR ANY OTHER CONFLICTS WITH THE DESIGN, PRIOR TO CONTINUING WORK IN THAT AREA. THE CONTRACTOR SHALL BE HELD RESPONSIBLE FOR ANY FIELD CHANGES MADE WITHOUT FIRST NOTIFYING LIGHTHOUSE DESIGN, INC.
16. TRENCHING AND OR SUBSTRUCTURE EXCAVATIONS MAY TAKE PLACE OVER, UNDER, OR ADJACENT TO OTHER UNDERGROUND FACILITIES (STORM, SEWER, WATER, ETC.) THE CONTRACTOR IS RESPONSIBLE TO LOCATE, EXPOSE AND PROTECT IN PLACE ALL EXISTING FACILITIES. THIS WORK SHALL NOT BE CONSIDERED AS EXTRA WORK. IT IS THE CONTRACTORS RESPONSIBILITY TO REVIEW ALL IMPROVEMENT AND GRADING PLANS, IN CONJUNCTION WITH THESE PLANS, AND BID HIS WORK ACCORDINGLY.
17. LIGHTHOUSE DESIGN, INC. ASSUMES NO RESPONSIBILITY FOR ANY DIFFERENCES BETWEEN THESE PLANS AND ACTUAL FIELD CONDITIONS. THE CONTRACTOR SHOULD VISIT THE PROJECT SITE PRIOR TO SUBMITTING BID.
18. THE CONTRACTOR SHALL COORDINATE ALL CONNECTIONS BETWEEN EXISTING & PROPOSED FACILITIES AS DIRECTED BY THE RESPECTIVE UTILITY INSPECTOR. ALL EXISTING CONDUIT TO BE USED SHALL BE MANDREL TESTED AND PROVED PRIOR TO CONNECTION. UTILITY COMPANIES SHALL MAKE ALL "HOT TIE-INS". THE CONTRACTOR SHALL NOT WORK ON ANY ENERGIZED FACILITIES, UNLESS DIRECTED BY UTILITY COMPANY.
19. THE CONTRACTOR IS REQUIRED TO EXCAVATE "BELL HOLES" AT THE TIE-IN LOCATIONS AS REQUIRED BY THE UTILITY COMPANIES.
20. THE CONTRACTOR SHALL BE RESPONSIBLE FOR MAINTAINING ALL ADJACENT EXISTING PROPERTY IMPROVEMENTS AND POINTS OF ACCESS AT ALL TIMES DURING THE CONSTRUCTION OPERATION. IT IS THE CONTRACTORS RESPONSIBILITY TO REPLACE ALL HARDSCAPE AND LANDSCAPE WHERE REMOVED OR DAMAGED AS A RESULT OF ITS OPERATIONS, UNLESS SHOWN OR NOTED OTHERWISE.
21. IT IS THE CONTRACTORS RESPONSIBILITY TO PRESERVE ALL CONSTRUCTION STAKING, ANY RE-STAKING REQUIRED DUE TO THE SOLE NEGLIGENCE BY THE CONTRACTOR SHALL BE CHARGED AND PAID FOR BY THE CONTRACTOR.
22. THE DEVELOPER AND/OR CONTRACTOR SHALL NOTIFY LIGHTHOUSE DESIGN, INC. TO SCHEDULE A PRE-CONSTRUCTION MEETING WITH ALL AGENCIES INVOLVED AT THE JOB SITE, WHICH SHOULD TAKE PLACE AT LEAST 2 WORKING DAYS PRIOR TO CONSTRUCTION.
23. ALL CONDUIT MUST BE MANDREL TESTED AND PROVED. CONDUIT SHALL ENTER PERPENDICULAR TO BOX WALLS, UNLESS NOTED OTHERWISE. CONDUIT NOT ENTERING BOXES SHALL BE RIGID CAPPED & MARKED. PULL ROPE OR TRUE TAPE SHALL BE PLACED IN ALL CONDUITS, SIZE & PLACEMENT AS REQUIRED BY UTILITY COMPANIES.
24. A 3 FOOT LEVEL WORKING AREA MUST BE MAINTAINED AROUND ALL ELECTRIC ENCLOSURES, EXCEPT 4'-6"x8'-6" VAULTS WHICH SHALL MAINTAIN A 5 FOOT MINIMUM LEVEL WORKING AREA ON THE SHORT WALL SIDES AND 3 FOOT ON THE LONG WALL SIDES AND PAD-MOUNT EQUIPMENT WHICH SHALL MAINTAIN AN 8 FOOT CLEAR AREA IN FRONT OF EQUIPMENT DOORS. REFER TO PG&E "GREEN BOOK" STANDARD DRAWING 051122 FOR CLEARANCE & PROTECTION REQUIREMENTS.
25. THE RESPECTIVE UTILITY INSPECTOR WILL DETERMINE IF RETAINING WALLS ARE NEEDED TO MEET MINIMUM CLEARANCE REQUIREMENTS. REFER TO PG&E "GREEN BOOK" STANDARD DRAWING 051122 FOR APPROVED RETAINING WALL REQUIREMENTS. RETAINING WALLS ARE THE DEVELOPERS RESPONSIBILITY AND ARE NOT INCLUDED IN THIS CONTRACT.
26. THE CONTRACTOR SHALL "RED-LINE" ONE SET OF JOINT TRENCH COMPOSITE PLANS AND TWO SETS OF GAS AND ELECTRIC PLANS WITH "RECORD" INFORMATION AND GIVE TO THE DEVELOPER PRIOR TO SPLICING OF THE PRIMARY ELECTRIC SYSTEM.

KEY MAP TO DRAWINGS N.T.S.

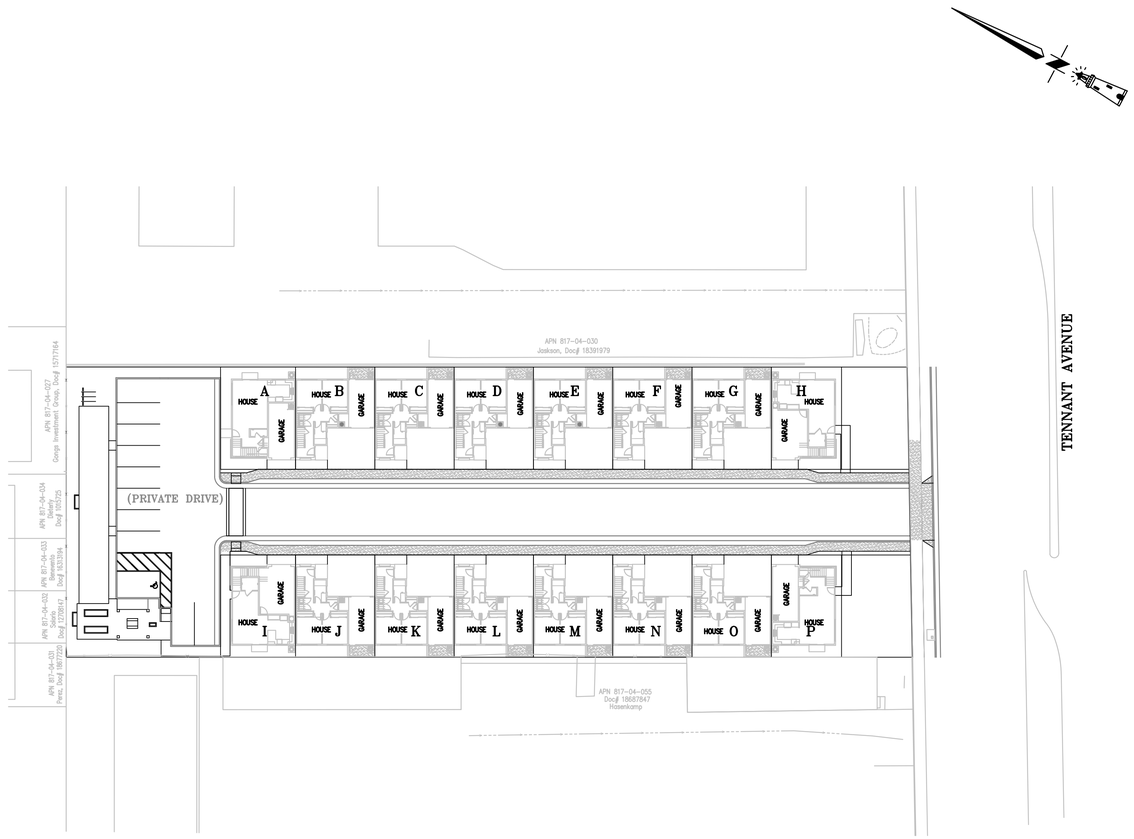

VICINITY MAP N.T.S.

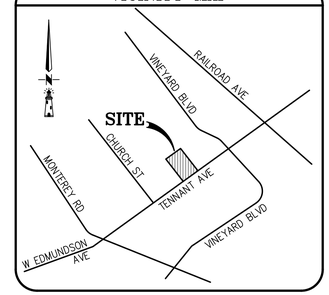

PLAN SET INDEX

SHEET No.	PLAN SHEET DESCRIPTION
JT1	COVER SHEET
JT2	TRENCH SECTIONS & DETAILS
JT3	COMPOSITE PLAN
SL1	STREET LIGHT PLAN
E1	ELECTRIC CONSTRUCTION PLAN

PROJECT REPRESENTATIVES

ELECTRIC Co.:	MICHELE GALL	831-262-0206
TELEPHONE Co.:	GREG WHITING	408-354-6372
CABLE TV Co.:	DAVID RODRIGUEZ	408-846-3794
DEVELOPER:	DAVID HALVORSON	408-981-9114
CIVIL ENGINEER:	AMANDA JOY MUSY-VERDEL	408-842-2173
CITY:		
LIGHTHOUSE DESIGN:	BOBBY YOUNG	925-757-4259

UTILITY Co. JOB NUMBERS

P.G.& E. ELECT. DEPT. JOB NO. PM-35182410

FRONTIER TELEPHONE JOB NO. _

CHARTER CABLE TV JOB NO. _

CONSTRUCTION & LABOR SUMMARY

THE ● BELOW INDICATES THE WORK TO BE PERFORMED BY THE CONTRACTOR AND EACH UTILITY COMPANY.

LEGEND

G = GAS UTILITY COMPANY
E = ELECTRIC UTILITY COMPANY
T = TELEPHONE COMPANY
C = CABLE TV COMPANY
D = CONTRACTOR PERFORMING WORK FOR THE DEVELOPER

JOINT TRENCH RESPONSIBILITY

	G	E	T	C	D
TRENCHING					
EXCAVATE, BACKFILL & COMPACT	○	○	○	○	●
SERVICE COMPLETIONS	○	○	○	○	●
~~GAS MATERIAL~~					
SUPPLY	○	○	○	○	○
INSTALL	○	○	○	○	○
SERVICE COMPLETIONS	○	○	○	○	○
ELECTRIC CONDUIT					
SUPPLY	○	○	○	○	●
INSTALL	○	○	○	○	●
SERVICE COMPLETIONS	○	○	○	○	●
ELECTRIC CONDUCTOR					
SUPPLY	○	○	○	○	●
INSTALL	○	○	○	○	●
SERVICE COMPLETIONS	○	○	○	○	●
ELECTRIC SECONDARY BOX or PED.					
EXCAVATE	○	○	○	○	●
SUPPLY	○	○	○	○	●
INSTALL	○	○	○	○	●
ELECTRIC TRANSFORMER VAULT					
EXCAVATE	○	○	○	○	●
SUPPLY	○	○	○	○	●
INSTALL	○	○	○	○	●
~~ELECTRIC PRIMARY VAULT~~					
EXCAVATE	○	○	○	○	○
SUPPLY	○	○	○	○	○
INSTALL	○	○	○	○	○
~~ELECTRIC TRANSFORMER PAD~~					
GRADE	○	○	○	○	○
SUPPLY	○	○	○	○	○
INSTALL	○	○	○	○	○
~~ELECTRIC SWITCH or JUNCTION PAD~~					
GRADE	○	○	○	○	○
SUPPLY	○	○	○	○	○
INSTALL	○	○	○	○	○
TELEPHONE CONDUIT					
SUPPLY	○	○	○	○	●
INSTALL	○	○	○	○	●
SERVICE ON PRIV PROP	○	○	○	○	●
TELEPHONE CABLE (DB) YES ○ ;NO ●					
SUPPLY	○	○	●	○	○
INSTALL	○	○	●	○	○
TELEPHONE SPLICE BOX or PED.					
EXCAVATE	○	○	○	○	●
SUPPLY	○	○	○	○	●
INSTALL	○	○	○	○	●
~~TELEPHONE INTERFACE PAD~~					
GRADE	○	○	○	○	○
SUPPLY	○	○	○	○	○
INSTALL	○	○	○	○	○

	G	E	T	C	D
CATV CONDUIT					
SUPPLY	○	○	○	○	●
INSTALL	○	○	○	○	●
CATV SPLICE BOX or PED.					
EXCAVATE	○	○	○	○	●
SUPPLY	○	○	○	○	●
INSTALL	○	○	○	○	●

STREET LIGHT RESPONSIBILITY

P.G.& E. RATE SCHEDULE: Private-Metered
CONDUIT SIZE & TYPE: 1-1/2"Ø SCH. 40 PVC
CONDUCTOR SIZE & TYPE: #8 cu. min.
INSTALL IN JOINT TRENCH: No

	E	D
CONDUIT		
SUPPLY	○	●
INSTALL	○	●
CONDUCTOR		
SUPPLY	○	●
INSTALL	○	●
SPLICE BOX		
EXCAVATE		●
SUPPLY		●
INSTALL		●
FOUNDATION BASE		
SUPPLY & INSTALL		●
POLE (including arm if applicable)		
SUPPLY		●
INSTALL		●
LUMINAIRE		
SUPPLY		●
INSTALL		●

COMMENTS

DEVELOPER SHALL SUPPLY & INSTALL THE GAS & ELECTRIC SYSTEM AS SHOWN IN THIS PLANSET UNDER THE COMPETITIVE BIDDING PROVISIONS OF THE CPUC RULES.

No.	Revisions	By	App.	Date
1	REVISED STREET LIGHTS	JM		3-14-24

Lighthouse Design, Inc.
Utility Consulting and Design
1781 Vineyard Drive, Ste. 212
Antioch, CA. 94509
ph: (925) 757-4259 * fax: (925) 756-0725

JOINT TRENCH COMPOSITE PLAN
TENNANT GARDENS
FOR: OSITO HOLDINGS, LLC
MORGAN HILL CALIFORNIA

CALL BEFORE YOU DIG USA 811

Design: B. YOUNT
Drawn: B. YOUNG
Scale: NONE
Date: OCT. 2020
Job No.: 2007

Sheet JT1 Of JT3 Sheets

DATE LAST WORKED ON: 3-25-24

TRENCH SECTION LEGEND

ST. = MINIMUM COVER IN STREET AREAS
[THESE SYMBOLS INDICATE SCHEMATIC AREAS OF OCCUPANCY ONLY]

- G — *GAS MAIN or SERVICE*
- P — *ELECTRIC PRIMARY*
- S — *ELECTRIC SECONDARY or SERVICE*
- SL — *STREET LIGHT SERVICE*
- T — *TELEPHONE*
- C — *CABLE TV*
- Pe — *PRIVATE ELECTRIC*

JOINT TRENCH OCCUPANCY

SECTIONS	GAS	TELEPHONE	CATV	ELEC SEC	ELEC PRI
A	+	+	+	+	+
A1	+	+	+		+
B	+	+		+	+
B1	+	+			+
C	+		+	+	+
C1	+		+		+
D		+	+	+	+
D1		+	+		+
E	+			+	+
E1	+				+
F		+		+	+
F1		+			+
G			+	+	+
G1			+		+
H				+	+
H1					+
I	+	+	+		
J	+	+			
K	+		+		
L		+	+		
M	+	+	+	+	
N	+	+		+	
O	+		+	+	
P		+	+	+	
Q	+			+	
R		+		+	
S			+	+	
T	+				
U		+			
V			+		
W				+	

GENERAL TRENCH SECTION NOTES

1. THE TRENCH FOOTAGES SHOWN ARE APPROXIMATE AND MAY VARY DEPENDING ON FIELD CONDITIONS. THE CONTRACTOR SHALL VERIFY ALL TRENCH FOOTAGES FOR ACCURACY PRIOR TO EXCAVATION.
2. THE TRENCH SECTIONS SHOWN ARE SCHEMATIC AND INDICATE AREAS OF OCCUPANCY ONLY, THEY DO NOT REFLECT THE SIZE OR QUANTITY OF THE FACILITIES BEING INSTALLED AND ARE DESIGNED TO ACCOMMODATE ALL REQUIRED FACILITIES AS SHOWN ON EACH TRENCH PARTICIPANTS' CONSTRUCTION PLANS. REFER TO THE COMPOSITE, CONDUIT, STREETLIGHT PLAN AND/OR EACH RESPECTIVE UTILITY COMPANIES CONSTRUCTION PLANS FOR THE NECESSARY CONDUIT, CABLE AND/OR PIPE BEING INSTALLED.
3. THE MINIMUM TRENCH DEPTHS SHOWN ARE BASED ON THE MINIMUM UTILITY COMPANY REQUIREMENTS FOR DEPTH AND SEPARATION. THE CONTRACTOR SHALL EXCAVATE FOR ADDITIONAL DEPTH OR WIDTH WHERE THE PROPOSED JOINT TRENCH FACILITIES APPROACH AND CROSS OTHER EXISTING UTILITY LINES (STORM, SEWER, WATER, ETC.) TO ADEQUATELY CLEAR THESE FACILITIES. THE JOINT TRENCH FACILITIES MAY BE PLACED EITHER UNDER OR ABOVE THE EXISTING UTILITY LINES WITH AT LEAST 6" FREE CLEARANCE BETWEEN THE EXISTING UTILITY LINES BEING CROSSED, OR SUCH GREATER MINIMUM DISTANCE AS MAY BE REQUIRED BY THE LOCAL GOVERNMENTAL AGENCY OR OTHER PUBLIC REGULATORY AGENCY. (SEE MINIMUM COVER AND CLEARANCE TABLE)
4. "M2" SERVICE COMPLETION TRENCH SHALL BE INSTALLED AFTER CURB AND GUTTER. CONTRACTOR SHALL COORDINATE ADDITIONAL MOVE-INS AS NECESSARY TO COMPLETE THE SERVICES TO EACH INDIVIDUAL UNIT WITH THE DEVELOPER, UTILITY COMPANIES AND ALL INVOLVED AGENCIES. THE COST OF THESE MOVE-INS SHALL BE INCLUDED IN THE CONTRACTORS UNIT BID PRICE FOR TRENCHING.
5. ALL TRENCH SECTIONS SHOWN ON THESE PLANS INCLUDE A 2" (2 INCH) SAND BEDDING, SEE GENERAL NOTE 13 ON SHEET 1. CONTRACTOR SHALL USE SAND BEDDING AND SHADING AS REQUIRED BY THE RESPECTIVE UTILITY COMPANY.

SUBSTRUCTURE VERIFICATION

DEVELOPER PLEASE READ & SIGN

ALL PG&E ENCLOSURES AND BOXES HAVE BEEN SET TO GRADE ACCORDING TO GRADE STAKES PROVIDED BY DEVELOPERS ENGINEER. ALL COSTS TO RELOCATE OR RE-ADJUST BOXES AT A LATER DATE WILL BE BILLED TO THE DEVELOPER. PLEASE HAVE YOUR JOB SUPT. VERIFY THE CORRECT GRADE OF ALL ENCLOSURES AND BOXES, AND SIGN AND DATE DRAWING. THANK YOU

SIGNED:____________________ **DATE:**__________

TYP. P.G.&E. PRI. BOX EXCAVATION (CONDUIT)

"A" BEND

PRIMARY BOX SIZE	DISTANCE (when conduit enters "A") "X"	"Y"	"Z"
3' x 5'	24'	7'	5'
4'-6" x 8'-6"	24'	11'	7'

BEND IS 60' RADIUS WITH AN ANGLE OF 10°. USE 2-5 COUPLINGS WITH 1-5' CONDUIT SECTION FOR EACH BEND SHOWN.

"B" BEND

PRIMARY BOX SIZE	DISTANCE (when conduit enters "B") "X"	"Y"	"Z"
3' x 5'	32'	7'	5'
4'-6" x 8'-6"	32'	11'	7'

BEND IS 30' RADIUS WITH AN ANGLE OF 15°. USE 3-5 COUPLINGS WITH 2-2 1/2' CONDUIT SECTIONS FOR EACH BEND SHOWN.

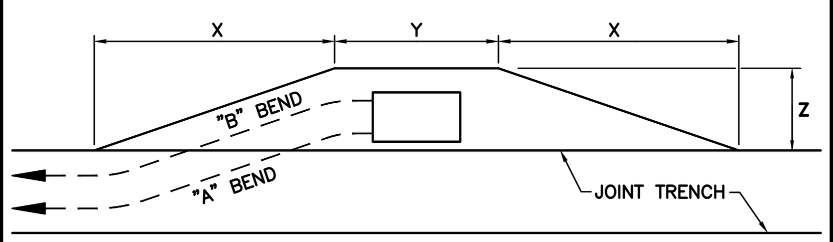

TYPICAL TRENCH TRANSITION DETAIL

1) CONTRACTOR SHALL EXCAVATE TRENCH TRANSITIONS FROM MAIN-LINE TRENCH TO UTILITY VAULTS AS REQUIRED BY EACH UTILITY COMPANY.
2) TRANSITION TRENCHES NOT SHOWN ON COMPOSITE PLAN FOR CLARITY.
3) CONTRACTOR SHALL INCLUDE THE COST OF TRENCH TRANSITIONS IN VAULT EXCAVATION COSTS.

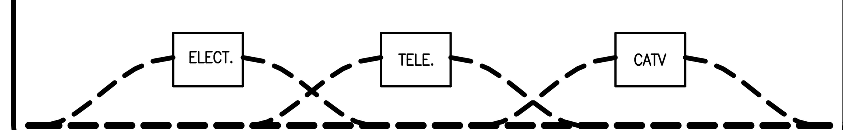

MINIMUM COVER & CLEARANCES

UTILITY	G	T (DUCT)	T (DB)	C	S	P	SL	COVER
GAS	—	12"	12"	12"	6"	12"	6"	24"
TELE. DUCT	12"	—	1"	1"	12"	12"	12"	24"
TELE. DIRECT BURIED	12"	1"	—	1"	12"	12"	12"	24"
CATV	12"	1"	1"	—	12"	12"	12"	24"
ELEC. SEC.	6"	12"	12"	12"	1.5"	3"	1.5"	24"
ELEC. PRI.	12"	12"	12"	12"	3"	3"	3"	36"
STREETLIGHT	6"	12"	12"	12"	1.5"	3"	1.5"	24"
FOREIGN ELECTRIC	12"	12"	12"	12"	12"	12"	12"	24"

1. MIN. COVER BASED ON TRENCH BEING LOCATED BEHIND CURB. ADDITIONAL COVER MAY BE REQUIRED BY UTILTY COMPANY &/OR MUNICIPALITY DUE TO FIELD CONDITIONS.
2. IT IS RECOMMENDED THAT ALL FACILITIES ARE TO BE A MINIMUM OF 12" BELOW SUBGRADE DISTURBANCE.
3. WHEN COMMUNICATION DUCTS ARE INSTALLED, A MINIMUM OF 12" RADIAL SEPARATION SHALL BE MAINTAINED FROM GAS FACILITIES UNLESS A MUTUAL AGREEMENT IS MADE WHEN A 4" DIAMETER OR SMALLER GAS PIPE IS INSTALLED THE SEPERATION MAY BE REDUCED TO NOT LESS THAN 6".

BACKFILL REQUIREMENTS

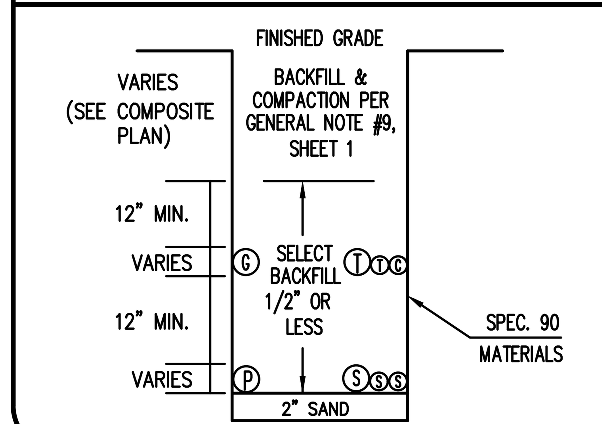

DESIGN CHANGE COMPONENT

ANY CHANGES TO THIS DESIGN MUST BE APPROVED BY

GAS ADE
PG&E

JOINT TRENCH UNDER WET UTILITIES (PREFERRED METHOD)

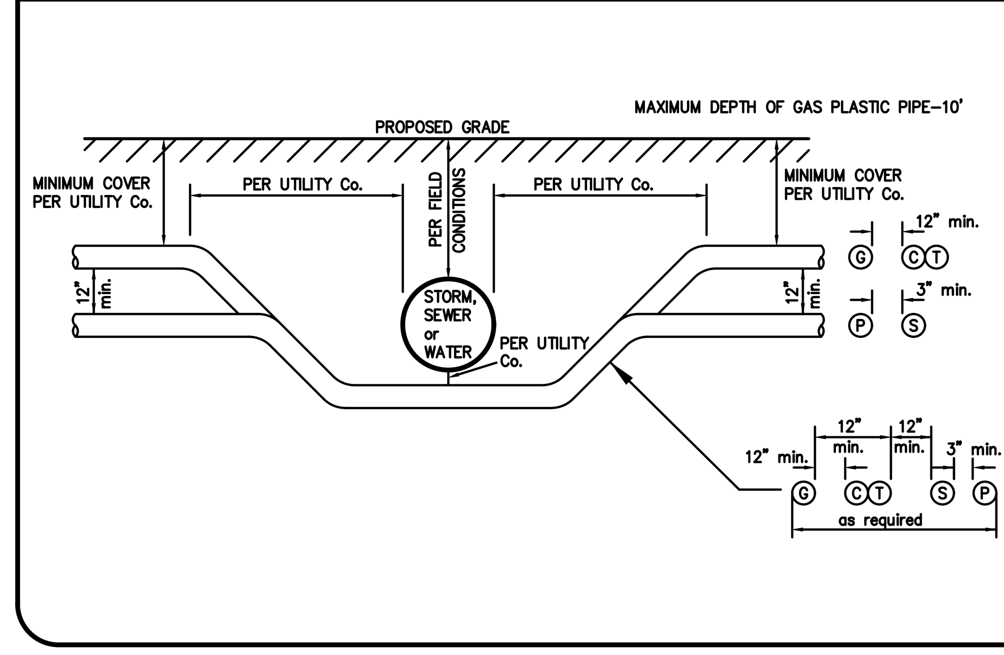

JOINT TRENCH OVER WET UTILITIES (ALTERNATE METHOD)

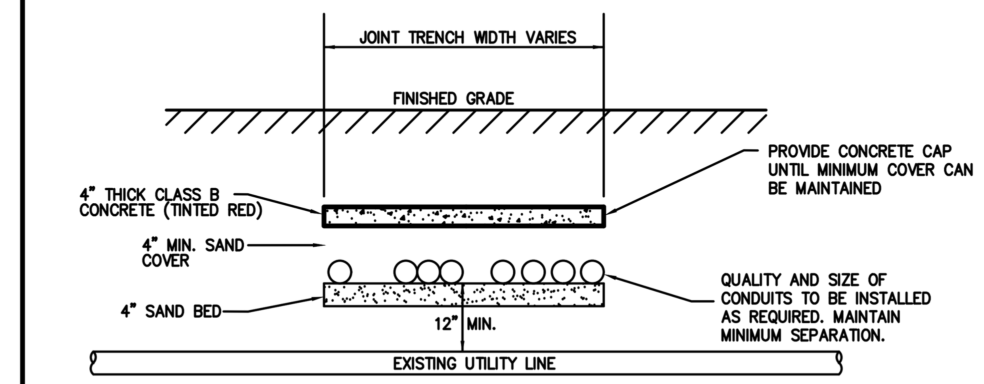

NOTES:

1. THIS DETAIL SHALL BE USED WHEN MINIMUM DEPTHS COVER CANNOT BE MAINTAINED DUE TO OBSTRUCTION OF EXISTING FACILITIES.
2. TRENCH DEPTH NOT TO EXCEED 5' UNLESS APPROVED BY PG&E INSPECTOR. IN NO CASE SHOULD PLASTIC GAS PIPE BE INSTALLED AT A DEPTH GREATER THAN 10' UNLESS APPROVED BY PG&E SENIOR GAS ENGINEER.

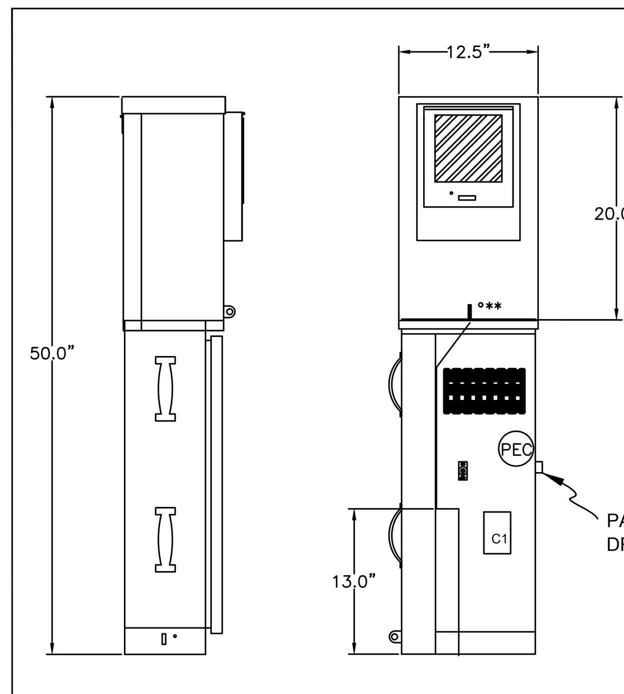

LEFT SIDE FRONT VIEW

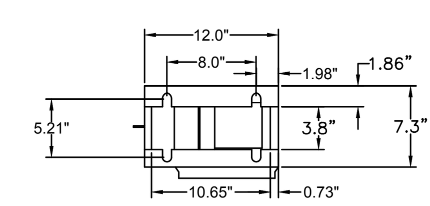

BASE PLAN

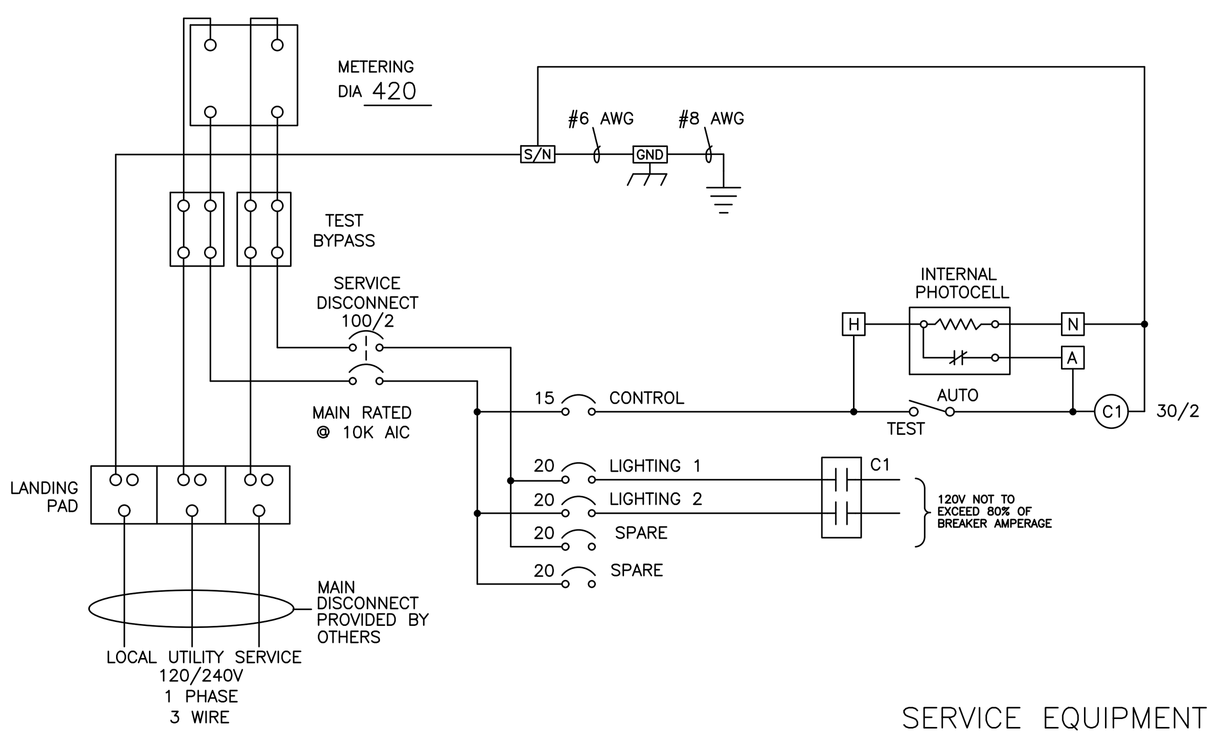

SERVICE EQUIPMENT WIRING DIAGRAM

NOTE: LOAD CURRENT FOR ALL BREAKERS NOT TO EXCEED 80% OF BREAKER AMPERAGE

ENCLOSURE CONSTRUCTION NOTES

1. EXTERIOR 12 GA. H.D. GALV. STEEL AND INTERIOR 14 GA. COLD ROLLED STEEL ELECTRICALLY WELDED AND REINFORCED WHERE REQUIRED.
2. CONSTRUCTION WILL BE NEMA 3R, RAINTIGHT.
3. ALL NUTS, BOLTS AND SCREWS WILL BE STAINLESS STEEL.
4. NUTS, BOLTS & SCREWS WILL NOT BE VISIBLE FROM OUTSIDE OF ENCLOSURE.
5. NAMEPLATES WILL BE PROVIDED AS REQUIRED.
6. CONTROL WIRING WILL BE MARKED AT BOTH ENDS BY PERMANENT WIRE MARKERS.
7. A PLASTIC COVERED WIRING DIAGRAM WILL BE ATTACHED TO THE INSIDE OF THE FRONT DOOR.
8. ENCLOSURE WILL BE FACTORY WIRED AND CONFORM TO REQUIRED NEMA AND UL 508A STANDARDS.
9. COLOR TO BE: *RANCH GREEN*

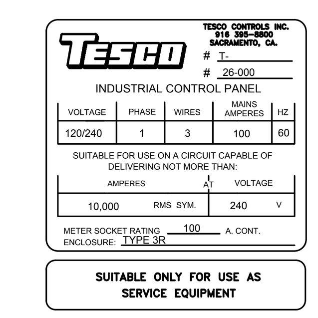

REV	DATE	BY	DESCRIPTION

TESCO CONTROLS, INC.
3434 52ND AVENUE
SACRAMENTO, CA 95823
(916) 395-8800

26-000
ELECTRICAL SCHEMATICS

DATE	DESIGN BY	DRAWN BY	CHK'D BY	SHEET #	DRAWING #
04-29-15		LB		OF	

TYPICAL TRENCH SECTIONS

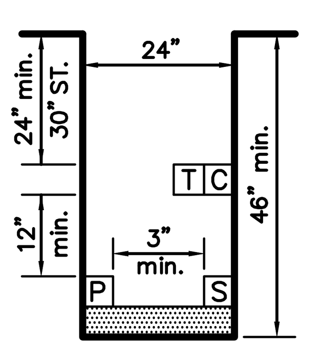

SECTION 'D'
128 LF -TOTAL
____ LF -PVMT

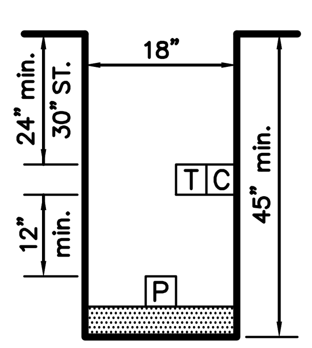

SECTION 'D1'
17 LF -TOTAL
____ LF -PVMT

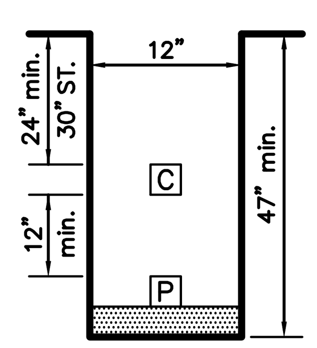

SECTION 'G1'
127 LF -TOTAL
113 LF -PVMT
(14' TRENCH)
(113' BORE)

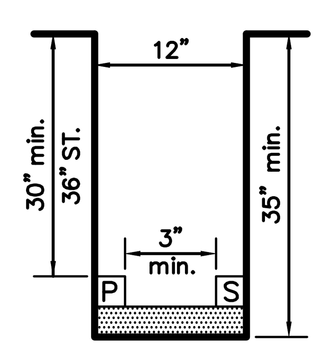

SECTION 'H'
21 LF -TOTAL
____ LF -PVMT

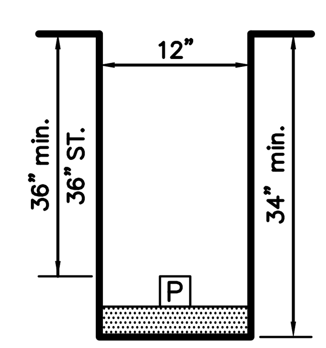

SECTION 'H1'
17 LF -TOTAL
17 LF -PVMT

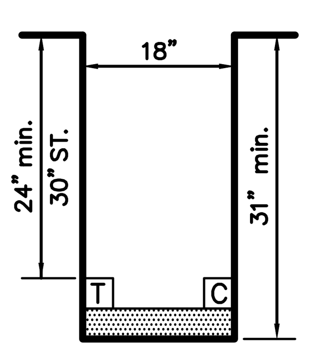

SECTION 'L'
30 LF -TOTAL
____ LF -PVMT

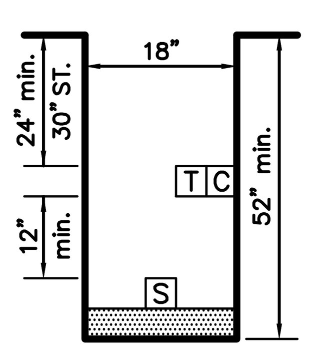

SECTION 'P'
609 LF -TOTAL
____ LF -PVMT

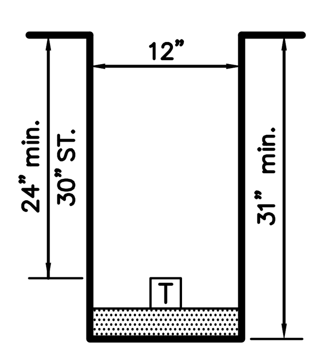

SECTION 'U'
20 LF -TOTAL
____ LF -PVMT

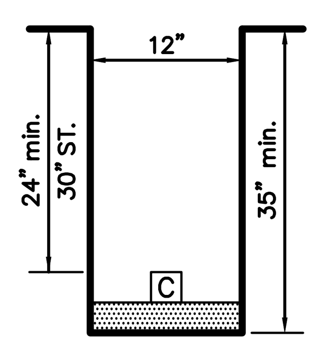

SECTION 'V'
7 LF -TOTAL
7 LF -PVMT

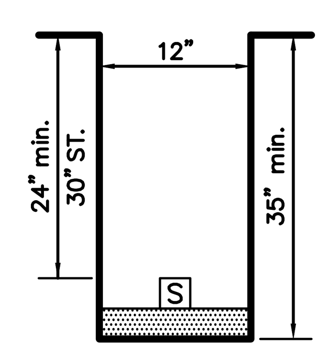

SECTION 'W'
89 LF -TOTAL
____ LF -PVMT

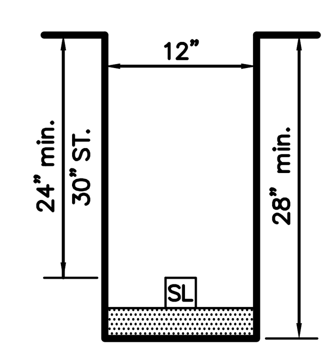

SECTION 'W2'
523 LF -TOTAL
____ LF -PVMT

No.	Revisions	By	App.	Date
1	REVISED STREET LIGHTS	JM		3-14-24

Lighthouse Design, Inc.
Utility Consulting and Design
1781 Vineyard Drive, Suite 212
Antioch, CA. 94509
ph: (925) 757-4259 * fax: (925) 756-0725

JOINT TRENCH COMPOSITE PLAN

TENNANT GARDENS
FOR: OSITO HOLDINGS, LLC
MORGAN HILL CALIFORNIA

Design: B. YOUNG
Drawn: B. YOUNG
Scale: 1"-20'
Date: OCT. 2020
Job No.: 2007

Sheet JT2 Of JT3 Sheets

DATE LAST WORKED ON: 3-25-24

JOINT TRENCH OCCUPANCY GUIDE

SECTIONS	A	B	C	D	E	F	G	H	I	J	K	L	M	N	O	P	Q	R	S	T	U	V	W
GAS	+	+	+	+	+	+			+	+					+	+	+		+	+			
TELEPHONE	+	+	+	+			+	+			+	+			+	+	+		+			+	
CATV	+	+			+	+	+	+					+	+			+	+			+		+
ELEC SEC	+		+		+		+		+		+		+	+			+	+	+	+			
ELEC PRI	+	+	+	+	+	+	+	+	+	+	+	+	+	+			+	+	+	+			+

COMPOSITE NOTES

1. CONTRACTOR SHALL COORDINATE ALL TIE-INS WITH UTILITY COMPANIES AS REQUIRED.
2. PROVIDE TIE-IN HOLE TO 12" BELOW EXISTING GAS MAIN FOR P.G.& E. GAS TIE-IN.
3. ALL VAULTS/PEDESTALS SHALL BE INSTALLED WITHIN RIGHT-OF-WAY or P.U.E. AREA.
4. FIELD ADJUST VAULTS/PEDESTALS AS REQUIRED TO AVOID CONFLICTS WITH DRIVEWAYS, SIDEWALKS, HANDICAP RAMPS, FIRE HYDRANTS, WATER & SEWER LATERALS, ETC.
5. TRANSITION TRENCH TO VAULTS/PEDESTALS NOT SHOWN FOR CLARITY. CONTRACTOR SHALL PROVIDE INCIDENTAL TRENCHING AS REQUIRED FOR CONDUIT ROUTING INTO VAULTS/PEDESTALS. CONTRACTOR SHALL INCLUDE COST OF TRANSITION TRENCH IN VAULT/PEDESTAL EXCAVATION COST.
6. OFFSET VAULTS/PEDESTALS AS REQUIRED FOR CONDUIT/CABLE ROUTING.
7. USE CARE WHEN TRENCHING AROUND EXISTING FACILITIES TO AVOID CONFLICTS, CALL U.S.A. (811) FOR MARK & LOCATE PRIOR TO CONSTRUCTION.
8. REMOVE & REPLACE EXISTING HARDSCAPE & LANDSCAPE AS REQUIRED.
9. FIELD ADJUST SERVICE CROSSINGS AS REQUIRED TO MINIMIZE CONFLICTS WITH EXISTING FACILITIES.
10. SERVICE/STUB LOCATIONS SHOWN ARE APPROXIMATE; CONTRACTOR SHALL VERIFY THEIR EXACT LOCATION IN FIELD PRIOR TO COMMENCING WORK. CONTRACTOR SHALL FIELD ADJUST SERVICE/STUB LOCATIONS AS REQUIRED TO AVOID CONFLICTS WITH OTHER FACILITIES.
11. JOINT TRENCH FACILITIES SHALL MAINTAIN A MINIMUM 3' HORIZONTAL CLEARANCE FROM EDGE OF JOINT TRENCH TO ALL WET UTILITIES WITH A MINIMUM 6" VERTICAL CLEARANCE WHEN CROSSING, PER PG&E STANDARD S5453.

CAUTION:
EXACT LOCATION AND DEPTH OF EXISTING FACILITIES WERE UNKNOWN AT THE TIME OF COMPOSITE PREPARATION. USE EXTREME CARE WHEN TRENCHING AND EXCAVATING. CALL U.S.A. (811) FOR MARK AND LOCATE PRIOR TO COMMENCING WORK. POT-HOLE AS NECESSARY. COORDINATE WITH DEVELOPER, CITY AND UTILITY COMPANIES AS REQUIRED.

COMPOSITE LEGEND

SYMBOL	DESCRIPTION
——EXJT——	EXISTING JOINT TRENCH
▬ ▬	PROPOSED JOINT TRENCH MAIN
- - - -	PROPOSED JOINT TRENCH SERVICE
▲	4'x6'6"x5' SUBSURFACE TRANSFORMER
2	17"x30"x18" SECONDARY SPLICE BOX
T7	24"x36" TELEPHONE SPLICE BOX
C	24"x36" CABLE TV SPLICE BOX
SL	STATE #3-1/2 PULL BOX
✶	STREET LIGHT (ROADWAY)
✶	STREET LIGHT (PARKING)
M	100A METER PEDESTAL "TESCO" OR EQUAL

20 0 10 20 40
(IN FEET)
1 INCH = 20 FT.

ALL BOXES LOCATED IN PAVEMENT AREA
REQUIRE FULL TRAFFIC LIDS

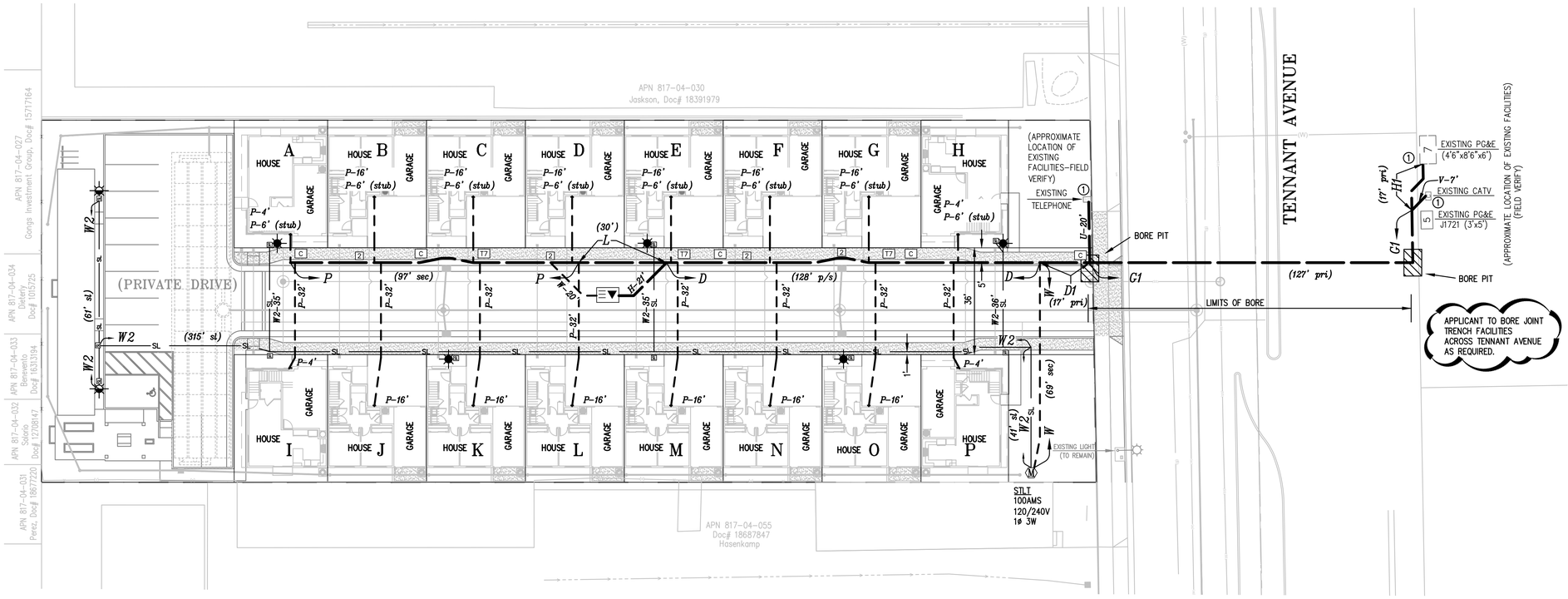

No.	Revisions	By	App.	Date
1	REVISED STREET LIGHTS	JM		3-14-24

Lighthouse Design, Inc.
Utility Consulting and Design
1781 Vineyard Drive, Suite 212
Antioch, Ca. 94509
ph. (925) 757-4259 * fax: (925) 756-0725

JOINT TRENCH COMPOSITE PLAN
TENNANT GARDENS
FOR: OSITO HOLDINGS, LLC
MORGAN HILL CALIFORNIA

CALL BEFORE YOU DIG USA 811

Design:	B. YOUNG
Drawn:	B. YOUNG
Scale:	1"=20'
Date:	OCT. 2020
Job No.:	2007

Sheet
JT3
Of JT3 Sheets

DATE LAST WORKED ON: 3-25-24

(4) 1/2" x 18" Anchor Bolts, 8" Bolt Circle, Diamond pattern

Access Door Orientation: 0°
Street Side Orientation: 180°

555 Lawrence Avenue | Roselle, IL 60172 | p 847.588.3400 | www.sternberglighting.com

CONCEPTUAL ASSEMBLY DRAWING, SUBJECT TO ENGINEERING VERIFICATION BY THE FACTORY

PT FIXTURE: PT

The medium scale Solana SL660 post-top Luminaire's modern geometric design complements a diverse assortment of contemporary architectural settings. Its urbanesque yoke design offers not only aesthetic beauty, durability, and optical efficiency, but takes street, area, and medium mount lighting to another level. The Solana SL660 is well suited for all roadway, site, and pedestrian environments. Our connective AAD "Advanced Air-flow Dynamics" maximizes heat sink expulsion to deliver unsurpassed thermal management for long-life LED performance and energy efficiency. The cast aluminum slipfitter slips a 3" OD x 3" tall tenon. The luminaire shall be UL listed in US and Canada.

PT FIXTURE OPTIONS: -SV1-BLOC

Lens: Flat Diffuse Acrylic Lens (SV1)
House Side Shield or Back Light Optical Control: Yes (BLOC)

POLE: 450P4-16

The 10-1/2" diameter cast 356 aluminum alloy base and aluminum shaft shall be a one-piece construction. For fixtures using remote ballasts or drivers, the servicing of these components requires pulling the pole. The pole shall be U.L. or E.T.L. listed in U.S. and Canada. All pole heights to have a tolerance of ± 2".

Model: 450 Lexington (450)
Shaft Type: Smooth Straight 4 Inch, 6061-T6 Aluminum Alloy (P4) (P4-)
Height: 16 Ft (16)

FINISH: /USLT

Assembly shall be powder coated to Urban Silver Textured finish. Prior to coating, the assembly shall be chemically cleaned and etched in a 5-stage washing system which includes alkaline cleaning, rinsing, phosphoric etching, reverse osmosis water rinsing, and non-chrome sealing to ensure corrosion resistance.

Catalog Number: PT-SL660-24L30T4-MDL018-SV1-BLOC / 450P4-16 / USLT

Job Name: Customer Signature: Drawing #54809
Job Location: Date: 2024/10/17 1 of 2

555 Lawrence Avenue | Roselle, IL 60172 | p 847.588.3400 | www.sternberglighting.com

CONCEPTUAL ASSEMBLY DRAWING, SUBJECT TO ENGINEERING VERIFICATION BY THE FACTORY

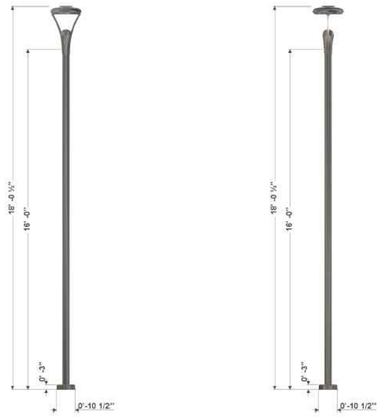

Catalog Number: PT-SL660-24L30T4-MDL018-SV1-BLOC / 450P4-16 / USLT

Job Name: Customer Signature: Drawing #54809
Job Location: Date: 2024/10/17 2 of 2

(4) 1/2" x 18" Anchor Bolts, 8" Bolt Circle, Diamond pattern

Access Door Orientation: 0°
Street Side Orientation: 180°

555 Lawrence Avenue | Roselle, IL 60172 | p 847.588.3400 | www.sternberglighting.com

CONCEPTUAL ASSEMBLY DRAWING, SUBJECT TO ENGINEERING VERIFICATION BY THE FACTORY

PT FIXTURE: SL760

The Solanah Post Top Luminaire's modern geometric design complements a diverse assortment of contemporary architectural settings. Its urbanesque yoke design offers not only aesthetic beauty, durability and optical efficiency, but takes street, area, and medium mount lighting to another level. The Solana SL760 is well suited for all roadway, site and pedestrian environments.

PT FIXTURE OPTIONS: -SV1-BLOC

Lens: Flat Soft Vue Light Diffused Acrylic (SV1)
Houseside Shield or Back Lighting Optical Control: Yes (BLOC)

POLE: 450P4-16

The 10-1/2" diameter cast 356 aluminum alloy base and aluminum shaft shall be a one-piece construction. For fixtures using remote ballasts or drivers, the servicing of these components requires pulling the pole. The pole shall be U.L. or E.T.L. listed in U.S. and Canada. All pole heights to have a tolerance of ± 2".

Model: 450 Lexington (450)
Shaft Type: Smooth Straight 4 Inch, 6061-T6 Aluminum Alloy (P4) (P4-)
Height: 16 Ft (16)

FINISH: /USLT

Assembly shall be powder coated to Urban Silver Textured finish. Prior to coating, the assembly shall be chemically cleaned and etched in a 5-stage washing system which includes alkaline cleaning, rinsing, phosphoric etching, reverse osmosis water rinsing, and non-chrome sealing to ensure corrosion resistance.

Catalog Number: PT-SL760-33L30T4-MDL018-SV1-BLOC / 450P4-16 / USLT

Job Name: Customer Signature: Drawing #54808
Job Location: Date: 2024/10/17 1 of 2

555 Lawrence Avenue | Roselle, IL 60172 | p 847.588.3400 | www.sternberglighting.com

CONCEPTUAL ASSEMBLY DRAWING, SUBJECT TO ENGINEERING VERIFICATION BY THE FACTORY

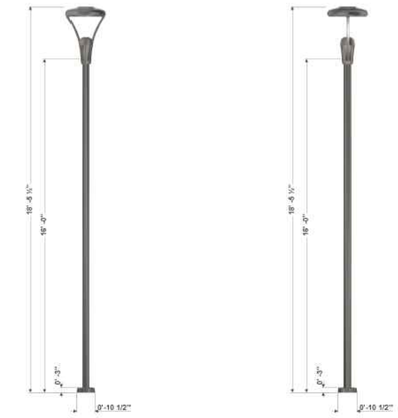

Catalog Number: PT-SL760-33L30T4-MDL018-SV1-BLOC / 450P4-16 / USLT

Job Name: Customer Signature: Drawing #54808
Job Location: Date: 2024/10/17 2 of 2

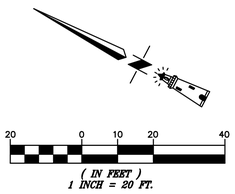

TYPICAL STREETLIGHT BASE DETAIL

N. T. S.

POLE DETAIL SHOWN SCHEMATIC, REFER TO MFR. SPECS. FOR ADDITIONAL INFORMATION.

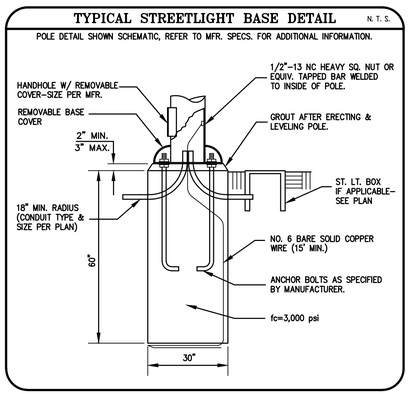

NOTE:
STREET LIGHT PLAN IS FOR CONDUIT AND CIRCUITING. REFER TO THE JOINT TRENCH COMPOSITE PLAN FOR ACTUAL LOCATION OF STREET LIGHT TRENCH.

STREETLIGHT LEGEND

SYMBOL	DESCRIPTION
—SL—	1 1/2"ø SCH. 40 PVC W/2–#8 COPPER WIRE
M	100A METER PEDESTAL "TESCO" OR EQUAL
SL	STATE #3–1/2 PULL BOX ("STREET LIGHT")
	STREET LIGHT (ROADWAY) (PT–SL660–24L30T4–MDL018–SV1–BLOC 450P4–16 USLT)
	STREET LIGHT (PARKING) (PT–SL660–32L30T4–MDL018–SV1–BLOC 450P4–16 USLT)

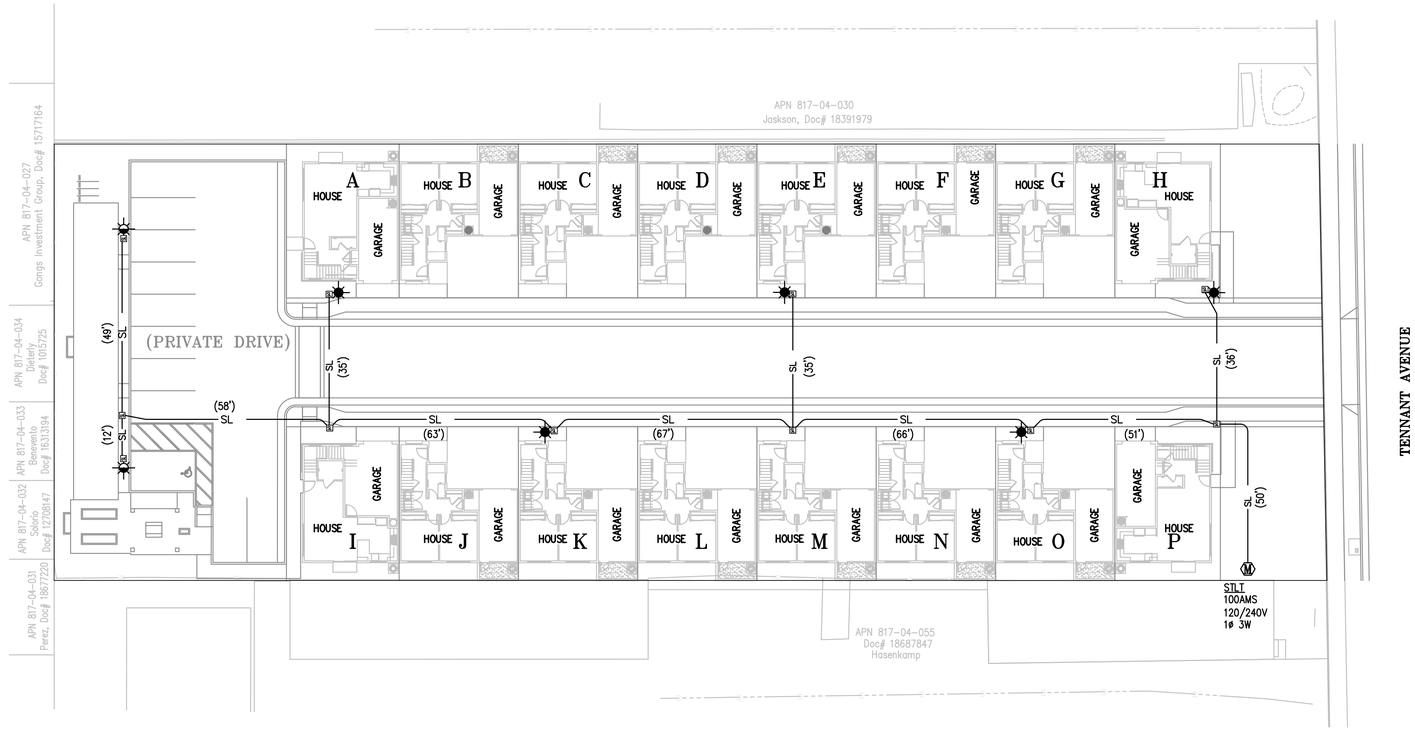

No.	Revisions	By	App.	Date
2	REVISED STREET LIGHT DETAILS	JM		11–26–24
1	REVISED STREET LIGHTS	JM		3–14–24

Lighthouse Design, Inc.
Utility Consulting and Design
1781 Vineyard Drive, Suite 212
Antioch, CA. 94509
ph: (925) 757–4259 • fax: (925) 756–0725

STREET LIGHT PLAN
TENNANT GARDENS
FOR: OSITO HOLDINGS, LLC
MORGAN HILL CALIFORNIA

CALL BEFORE YOU DIG 811 USA

Design:	B. YOUNG
Drawn:	B. YOUNG
Scale:	1"–20'
Date:	OCT. 2020
Job No.:	2007

Sheet SL1 Of SL1 Sheets

DATE LAST WORKED ON: 11–26–24

LEGEND

- P — INSTALL 1-1/0AL EPR CONC ENCAP 25KV PRIMARY CABLE IN 2" DUCT
- EXISTING THREE PHASE PRIMARY CABLE (SIZE AS SHOWN)
- EXISTING SINGLE PHASE PRIMARY CABLE (SIZE AS SHOWN)
- S — INSTALL 4/0A TPX 600V SECONDARY CABLE IN 3" DUCT
- SV — INSTALL 4/0A TPX 600V SERVICE CABLE IN 3" DUCT
- SV1 — INSTALL 1/0A TPX 600V SERVICE CABLE IN 3" DUCT
- INSTALL 4'x6'6"x5' SUBSURFACE TRANSFORMER, 1ø
- INSTALL 600A J W/200A TAP
- [2] INSTALL 17"x30"x18" (IVT) SECONDARY ENCLOSURE

(CONDUIT) (CABLE LENGTH W/TAILS) (XX'/XX') (DISTRIBUTION)

(CONDUIT FRANCHISE) (CONDUIT PRIVATE) (CABLE LENGTH W/TAILS) (XX'/XX'/XX') (DISTRIBUTION)

GENERAL NOTES

1. THIS IS AN APPLICANT INSTALLED JOB. APPLICANT TO PERFORM ALL WORK, EXCEPT AS NOTED.
2. TRENCH TO BE JOINT WITH ELECTRIC, GAS, TELEPHONE, AND CATV.
3. CITY PERMITS ARE REQUIRED.
4. DESIGN CRITERIA: 1,530 SQ. FT. AVG. SINGLE FAMILY RESIDENCE, 200 AMS, 120/240, 1ø, 3 TON AC., 4/0A TPX SVC IN 3" DUCT, CLIMATE ZONE 'S' (SUMMER INTERIOR)
5. THE FAULT DUTY AT ALL MAIN SWITCHES IS AT OR BELOW 10,000A BASED ON PG&E STANDARDS.
6. RIGID CAP ALL SPARE CONDUITS.
7. SERVICE CABLE LENGTHS INCLUDE TAILS (CONDUIT (F)/CONDUIT(PP)/CABLE)
8. LOCATE ALL UNDERGROUND FACILITIES BEFORE TRENCH AND EXCAVATION, CALL UNDERGROUND SERVICE ALERT AT 811 AT LEAST TWO WORKING DAYS PRIOR TO DIGGING.
9. FACILITIES TO BE LOCATED IN RIGHT OF WAY. EASEMENTS TO BE GRANTED AS NECESSARY AT APPLICANT'S EXPENSE.
10. SECONDARY AND SERVICE CONDUITS SHALL ENTER BOXES/PEDESTALS FROM UNDERNEATH WITH 90 DEGREE VERTICAL BENDS.
11. BEFORE BEGINNING SUBSTRUCTURE WORK, PLEASE CALL PG&E UNDERGROUND INSPECTOR 48 HOURS IN ADVANCE.
12. DO NOT EXCEED 300 DEGREES OF BENDS IN ANY PRIMARY CONDUIT RUN. DO NOT EXCEED 315 DEGREES OF BENDS IN ANY SECONDARY/SERVCE CONDUIT RUN (200' MAX). DO NOT EXCEED 300 DEGREES OF BENDS IN ANY SECONDARY/SERVCE CONDUIT RUN (OVER 200'). (INCLUDING BEND AT THE FEED LOCATION)
13. PROVIDE CLEARANCES AND WORKING SPACE PER PG&E DWG. 051122.
14. PG&E TO PERFORM WORK AT 800 LOCATIONS & ALL HOT TIE-IN WORK.

PRIMARY PULL DATA

CABLE RUN LOC.	ESTIMATED PULLING TENSION	PREFERRED DIRECTION OF PULL	ACTUAL PULLING TENSION	PULLING COMPOUND	FOREMAN'S INITIALS
801	91 lbs.	LOC. 800 – LOC. 802/7		.5 lbs.	

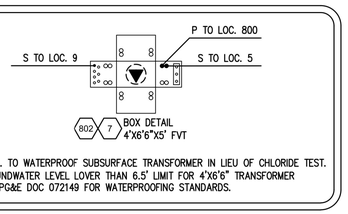

APPL. TO WATERPROOF SUBSURFACE TRANSFORMER IN LIEU OF CHLORIDE TEST. GROUNDWATER LEVEL LOVER THAN 6.5' LIMIT FOR 4'X6'6" TRANSFORMER SEE PG&E DOC 072149 FOR WATERPROOFING STANDARDS.

LOCATION 802/7
T169540 C#
100 KVA 1ø SS TFR.
12/21Y 21KV 120/240V 3W 1ø
TOTAL CUSTOMERS = 16+MISC.
PROPOSED LOAD = 76 KVA (S)
COOR# 100000062080
MFG.
S/N#

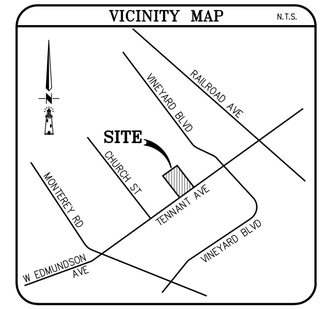

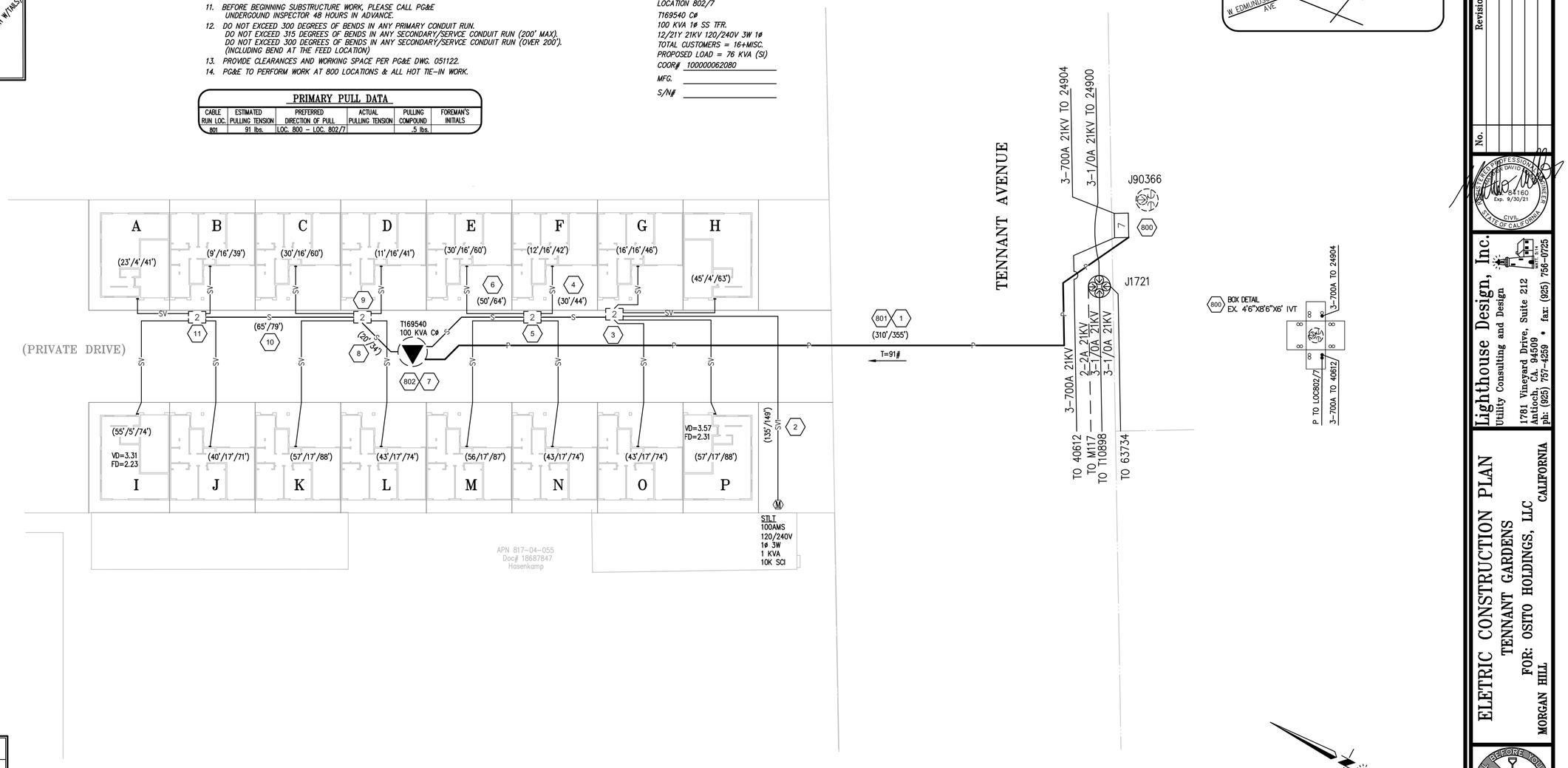

UNDERGROUND SERVICE ALERT

CALL BEFORE YOU DIG
CALL: TOLL FREE 811
TWO WORKING DAYS BEFORE YOU DIG

PG&E GAS CONFLICTS IDENTIFIED FOR THIS PROJECT
GAS PLATS 204-13

PG&E FACILITIES IN CONFLICT WITH EXCAVATION AT LOC(S):
800/1

PG&E FACILITIES IN CONFLICT WITH EXCAVATION AT LOC(S):
N/A

PG&E APPLICANT DESIGN APPROVAL

PG&E Plan Check does not release the Applicant from responsibility to construct the facilities according to PG&E Standards. In the event of a conflict during construction, PG&E Standards take precedence.

Electric ADE: Dan Chavis Desk Phone: 916-760-2983

Approval Signature: Dan Chavis

Date: 12/9/2020

CIRCUIT MAP: AS127-N
BLOCK MAP: AS127-N 01
SUMMER COASTAL
CLIMATE ZONE: X
FEEDER: MORGAN HILL 2106
PRIMARY VOLTAGE: CLASS 1
INSULATION DISTRICT: B
CORROSION AREA: NON-CORROSION
HIGH FIRE THREAT: TIER #1
SNOW LOADING AREA: LIGHT
SSD: SW 26465
PM #35182410
NOT #119127504

No.	Revisions	By	App.	Date

Lighthouse Design, Inc.
Utility Consulting and Design
1781 Vineyard Drive, Suite 212
Antioch, CA. 94509 * fax: (925) 756-0725
ph: (925) 757-4259

REGISTERED PROFESSIONAL ENGINEER
84160
Exp. 9/30/21
CIVIL
STATE OF CALIFORNIA

ELETRIC CONSTRUCTION PLAN
TENNANT GARDENS
FOR: OSITO HOLDINGS, LLC
MORGAN HILL CALIFORNIA

CALL BEFORE YOU DIG USA 811

Design: B. YOUNG
Drawn: B. YOUNG
Scale: 1"=20'
Date: MAY 2020
Job No.: 2007

Sheet E1 Of E1 Sheets

DATE LAST WORKED ON: 12-4-20

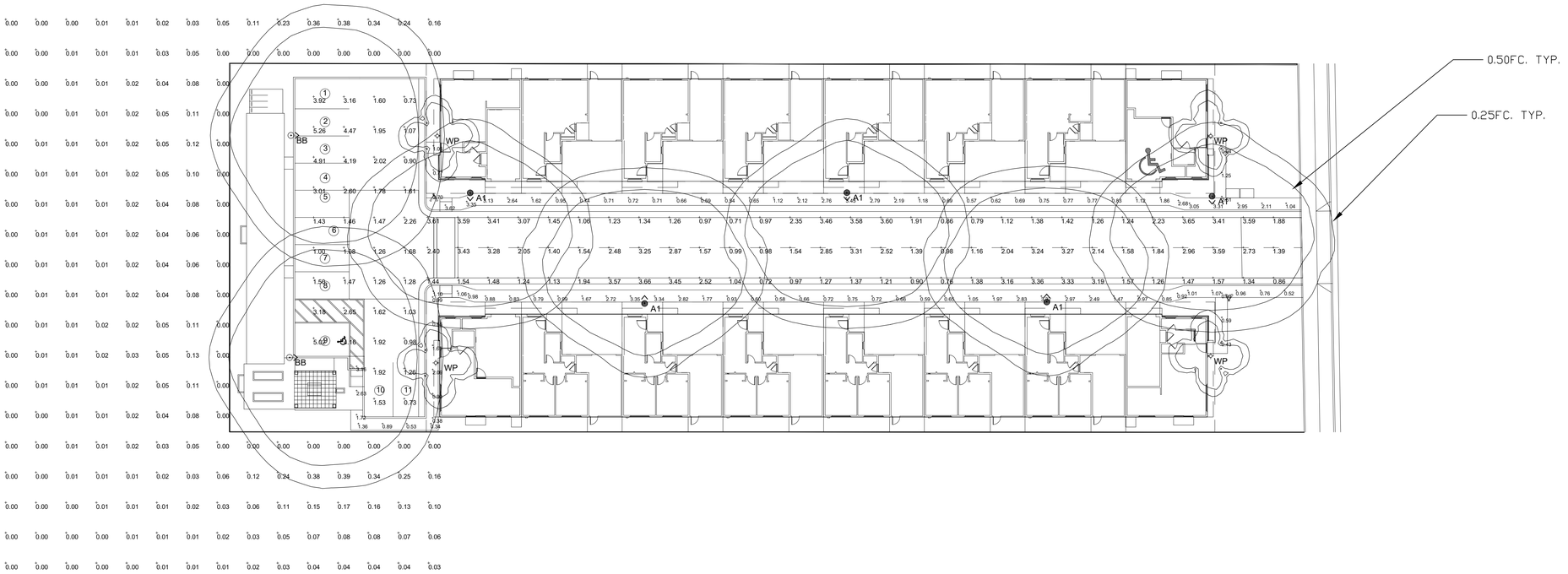

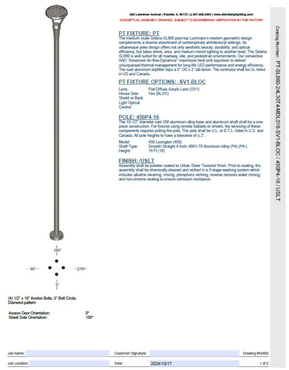

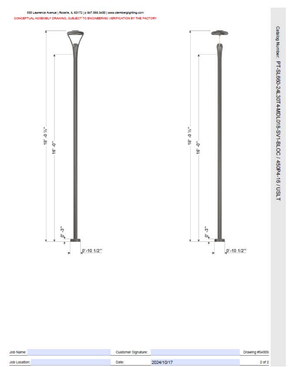

A1

Luminaire Schedule - LED								
Project: 215 TENNANT AVE - MORGAN HILL								
Symbol	Qty	Label	Arrangement	LLF	Luminaire Lumens	Luminaire Watts	Description	Filename
	4	WP	Single	0.900	726	10.77	SCONCE BY OTHERS @ 7'	SATW091508Lxx_IES (2).IES
	5	A1	SINGLE	0.837	6998	117	STERNBERG SL660-24L30T4-MDL018-SV1-BLOC @ 18' LC	SL660-24L40T4-MDL018-SV1-BLOC.IES
	2	BB	SINGLE	0.837	9899	154	STERNBERG SL760-32L30T4-MDL018-SV1-BLOC @ 18' LC	SL760-32L40T4-MDL018-SV1-BLOC.IES

Calculation Summary							
Project: 215 TENNANT AVE - MORGAN HILL							
Description	CalcType	Units	Avg	Max	Min	Avg/Min	Max/Min
PARKING LOT	Illuminance	Fc	2.16	5.26	0.73	2.96	7.21
SIDEWALKS	Illuminance	Fc	1.48	3.62	0.34	4.35	10.65
ALLEY DRIVE AISLE	Illuminance	Fc	2.04	3.66	0.71	2.87	5.15

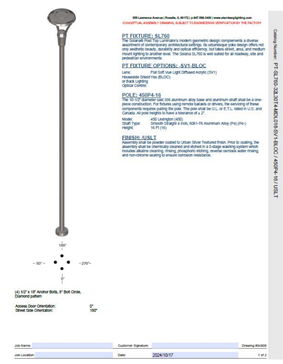

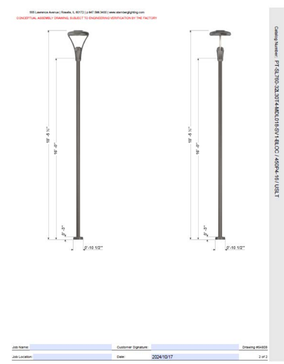

BB

ALL VALUES SHOWN ARE MAINTAINED HORIZONTAL FOOTCANDLES AT GRADE

PHOTOMETRIC DATA USED AS INPUT FOR THESE CALCULATIONS IS BASED ON ESTABLISHED IES PROCEDURES AND PUBLISHED LAMP, RATINGS, FIELD PERFORMANCE WILL DEPEND ON ACTUAL LAMP, BALLAST, ELECTRICAL, AND SITE CHARACTERISTICS.

Calculations have been performed according to IES standards and good practice. Some differences between measured values and calculated results may occur due to tolerances in calculation methods, testing procedures, component performance, measurement techniques and field conditions such as voltage and temperature variations. Input data used to generate the attached calculations such as room dimensions, reflectances, furniture and architectural elements significantly affect the lighting calculations. If the real environment conditions do not match the input data, differences will occur between measured values and calculated values.

Associated Lighting Representatives, Inc.

ASSOCIATED LIGHTING REPRESENTATIVES, INC
7777 PARDEE LANE
P.O. BOX 2265
OAKLAND, CA 94621
PHONE: (510) 638-0158 - FAX (510) 638-2908

REPORT FOR: LIGHTHOUSE
BY: APPLICATIONS ENGINEERING; RAMON ZAPATA
SALES REPRESENTATIVE: ALR; JOHN BENSON

AGI32 VERSION 19.14
AGI (C) 2020 LIGHTING ANALYSTS, INC.
10268 W. CENTENNIAL ROAD, SUITE 202
LITTLETON, CO 80127

PROJECT DESCRIPTION

215 TENNANT AVE
CITY OF MORGAN HILL

PHM

DRAWING NO. / INPUT FILE
17951BEN-R7.DWG / 17951BEN-R7.A32

SCALE	SHEET	DATE	REV
1" = 20'	1 OF 1	10.02.2024	7

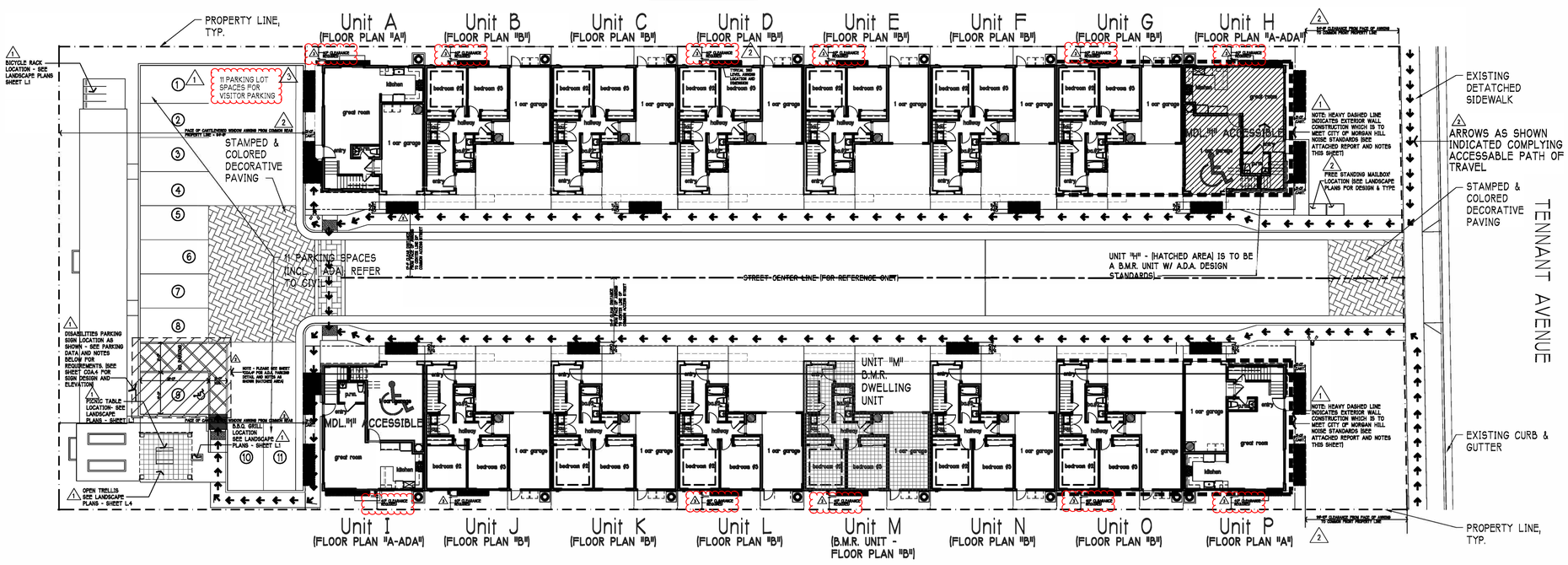

SCALE: 1" = 10.00'

ARCHITECTURAL SITE DEVELOPMENT PLAN

⚠ NOTE: THIS "ARCHITECTURAL SITE DEVELOPMENT PLAN IS SHOWN TO ADDRESS THE SITE DEVELOPMENT STANDARDS AS SET FORTH BY THE MORGAN HILL PLANNING AND HOUSING DEVELOPMENT DEPARTMENTS. FOR ALL ON SITE AMENITIES, SITE DRAINAGE AND GRADING AND OTHER DESIGN FEATURES RELATING TO THE OVERALL SITE DEVELOPMENT OF THIS PROJECT PLEASE REFER TO BOTH THE CIVIL ENGINEERS DOCUMENTS AS WELL AS THE LANDSCAPE ARCHITECTS DESIGN DOCUMENTS

⚠ GENERAL NOTE FOR REFERENCE ONLY: "THE BUILDING DEPARTMENT DOES NOT REVIEW "JOINT TRENCH" PLANS (SHEETS JT1 THRU JT3).

⚠ NOTE: "FIXED OR BUILT-IN SEATING, TABLES AND COUNTERS IN COMMON USE AREAS (OUT DOOR PICNIC AREA) SHALL COMPLY WITH C.B.C. SECTIONS 1127A.1 & 1127A.12.

⚠ PARKING NOTES AND DATA:

PLEASE NOTE THAT: "UNCOVERED PARKING IS UNASSIGNED" AND ALL 11 PARKING SPACES IN PARKING LOT ARE "VISITOR PARKING."

C.B.C. 1109A.5 - UNASSIGNED AND VISITOR PARKING SPACES:
WHEN PARKING IS PROVIDED FOR "COVERED MULTIFAMILY DWELLINGS" AND IS NOT ASSIGNED TO A RESIDENT OR A GROUP OF RESIDENTS AT LEAST 5 PERCENT OF THE PARKING SPACES SHALL BE ACCESSIBLE AND PROVIDE ACCESS TO GRADE-LEVEL ENTRANCES OF COVERED MULTIFAMILY DEWELLINGS AND FACILITIES (E.G., SWIMMING POOLS, CLUB HOUSES, RECREATION AREAS AND LAUNDRY ROOMS) THAT SERVE COVERED MULTIFAMILY DWELLINGS. ACCESSIBLE PARKING SPACES SHALL BE PROVIDED SIGNAGE AS REQUIRED BY SECTION 1109A.8.8. SUCH SIGNAGE SHALL NOT BE BLOCKED FROM VIEW BY A VEHICLE PARKED IN THE SPACE.

C.B.C. 1109A.8.8 - IDENTIFICATION:
EACH ACCESSIBLE PARKING SPACE SHALL BE IDENTIFIED WITH SIGNAGE AND SURFACE MARKING IN ACCORDANCE WITH SECTIONS 1109A.8.8.1 AND 1109A.8.8.2.

C.B.C. 1109A.8.8.1 - PARKING SIGNAGE:
EACH ACCESSIBLE PARKING SPACE RESERVED FOR PERSONS WITH DISABILITIES SHALL BE IDENTIFIED BY A REFLECTIVE SIGN CONSISTING OF THE "INTERNATIONAL SYMBOL OF ACCESSIBILITY" COMPLYING WITH SECTION 1143A.8. THE SIGN SHALL NOT BE SMALLER THAN 70 SQUARE INCHES (4516mm2) IN AREA, AND SHALL BE POSTED 60 INCHES MINIMUM ABOVE THE FINISH FLOOR OR GROUND SURFACE, MEASURED TO THE BOTTOM OF THE SIGN, SIGNS LOCATED ON ACCESSIBLE ROUTES SHALL BE POSTED AT A MINIMUM HEIGHT OF 80 INCHES (2032 mm)ABOVE THE FINISH FLOOR OR GROUND SURFACE OF THE ACCESSIBLE ROUTE MEASURED TO THE BOTTOM OF THE SIGN.
SIGNS IDENTIFYING ACCESSIBLE PARKING SPACES SHALL BE VISIBLE FROM EACH PARKING SPACE THEY SERVE, AND SHALL BE PERMANENTLY POSTED IMMEDIATELY ADJACENT TO THE PARKING SPACE OR WITHIN THE PROJECTED PARKING SPACE WIDTH AT THE HEAD END OF THE PARKING SPACE. SIGNS MAY ALSO BE PERMANENTLY POSTED ON A WALL AT THE INTERIOR END OF THE PARKING SPACE.
VAN ACCESSIBLE SPACES SHALL COMPLY WITH SECTION 1109A.8.6 AND SHALL HAVE AN ADDITIONAL SIGN OR ADDITIONAL LANGUAGE STATING "VAN ACCESSIBLE" BELOW THE SYMBOL OF ACCESSIBILITY.
AN ADDITIONAL SIGN SHALL ALSO BE POSTED IN A CONSPICUOUS PLACE AT EACH ENTRANCE TO OFF-STREET PARKING FACILITIES OR IMMEDIATELY ADJACENT TO AND VISIBLE FROM EACH ACCESSIBLE STALL OR SPACE. THE SIGN SHALL NOT BE LESS THAN 17 INCHES (432mm) BY 22 INCHES (559mm) IN SIZE WITH LETTERING NOT LESS THAN 1 INCH (25.4MM) IN HEIGHT, AND SHALL CLEARLY AND CONSPICOUSLY STATE THE FOLLOWING:

"UNAUTHORIZED VEHICLES PARKED IN DESIGNATED ACCESSIBLE SPACES NOT DISPLAYING DISTIGUISHING PLACARDS OR SPECIAL LICENSE POLATES ISSUED FOR PERSONS WITH DISABILITIES WILL BE TOWED AWAY AT THE OWNERS EXPENSE. TOWED VEHICLES MAY BE RECLAIMED AT ----------OR BY TELEPHONING ----------"

"UNAUTHORIZED VEHICLES PARKED IN DESGNATED ACCESSIBLE SPACES NOT DISPLAYING DISTINGUISHING PLACARDS OR SPECIAL LICENSE PLATES ISSUED FOR PERSONS WITH DISABILITIES WILL BE TOWED AWAY AT THE OWNERS EXPENSE. TOWED VEHICLES MAY BE RECLAIMED AT ---------- OR BY TELEPHONING ----------"
BLANK SPACES ARE TO BE FILLED IN WITH APPROPRIATE INFORMATION AS A PERMANENT PART OF THE SIGN.

1109A.8.8.2 PARKING SPACE MARKING:
DIAGRAM - IN ADDITION TO THE SIGNAGE REQUIREMENTS, EACH ACCESSIBLE PARKING SPACE SHALL HAVE A SURFACE IDENTIFICATION COMPLYING WITH EITHER OF THE FOLLOWING:
1. THE PARKING SPACE SHALL BE OUTLINED OR PAINTED BLUE, AND SHALL BE MARKED WITH THE "INTERNATIONAL SYMBOL OF ACCESSIBILITY" IN WHITE OR A SUITABLE CONTRASTING COLOR. THE "INTERNATIONAL SYMBOL OF ACCESSIBILITY" SHALL BE 36 INCHES (914mm) WIDE BY 36 INCHES (914mm) HIGH MINIMUM, WITH THE CENTERLINE 6 INCHES (152mm) MAXIMUM FROM THE CENTERLINE OF THE PARKING SPACE ITS SIDES PARALLEL TO THE LENGTH OF THE PARKING SPACE AND ITS LOWER SIDE ALIGNED WITH THE END OF THE PARKING SPACE.
2. THE PARKING SPACE SHALL BE MARKED WITH THE "INTERNATIONAL SYMBOL OF ACCESSIBILITY", IN WHITE ON A BLUE BACKGROUND, 36 INCHES (914mm) WIDE BY 36 INCHES (914mm) HIGH MINIMUM SIZE. THE CENTERLINE OF THE "INTERNATIONAL SYMBOL OF ACCESSIBILITY" SHALL BE 6 INCHES (152mm) MAXIMUM FROM THE CENTERLINE OF THE PARKING SPACE, ITS SIDES SHALKL BE PARALLEL TO THE LENGTH OF THE PARKING SPACE AND ITS LKOWER SIDE SHALL BE ALIGNED WITH THE END OF THE PARKING SPACE LENGTH.

NOISE CONTROL NOTES AND RECOMMENDATIONS:

TO ACHIEVE COMPLIANCE WITH THE 45dB DNL AND 55 dBA Lmax LIMITS OF THE CITY OF MORGAN HILL NO8ISE ELEMENT AND TITLE 24, THE FOLLOWING WINDOW AND DOOR CONTROLS WILL BE REQUIRED. IN ADDITION, GENERAL BUILDING SHELL CONTROLS ARE ALSO RECOMMENDED, AS DESCRIBED IN APPENDIX B.
1. MAINTAINED CLOSED AT ALL TIMES ALL WINDOWS AND GLASS DORS OF LIVING SPACES WITH A DIRECT OR SIDE VIEW OF TENNANT AVENUE AND WITHIN 135 FT. OF THE CENERLINE OF THE ROAD. INSTALL WINDOWS AND GLASS DOORS RATED MINIMUM SOUND TRANSMISSION CLASS (STC) 31 AT THESE LIVING SPACES.
2. THE POROJECT ENTRY DOORS WITHIN 135 FT. OF THE CENTERLINE OF TENNANT AVENUE AND WITH A DIRECT OR SIDE VIEW OF THE ROAD SHALL BE SOLID CORE WOOD OR STEEL INSULATED DOORS WITH FULL PERIMETER ACOUSTICAL SEALS, INCLUDING THE THRESHOLD.
WHEN WINDOWS AND GLASS DOORS ARE MAITAINED CLOSED AT ALL TIMES FOR NOISE CONTROL, SOME TYPE OF MECHANICAL VENTILATION MUST BE PROVIDED (SEE REVISED TITLE #24 MECHANICAL OR APPROPRIATE DESIGN DOCUMENTS) THE MECHANICAL VENTILATION SYSTEM SHALL CONFORM TO THE REQUIREMENTS OF THE CALIFORNIA MECHANICAL CODE, AS DESCRIBED IN APPENDIX "C", AND SHALL NOT COMPRIMISE THE ACOUSTICAL INTEGRITY OF THE BUILDING SHELL.

THE WINDOWS AND GLASS DOORS SPECIFIED ABOVE TO BE MAINTAINED CLOSES SHALL BE OPERABLE AS THE REQUIREMENT DOES NOT IMPLY A FIXED OR INOPERABLE CONDITION. ALL OTHER WINDOWS OF THE DEVELOPMENT MAY BE KEPT OPEN AS DESIRED WITH THE EXCEPTION OF BATHROOMS THAT ARE AN INTEGRAL PART OF A LIVING SPACE AND NOT SEPARATED BY A CLOSEABLE DOOR, SUCH AS THOSE COMMON IN MASTER BEDROOM SUITES.
IN ADDITION, THE WINDOWS AND DOORS SHALL BE INSTALLED IN AN ACOUSTICALLY-EFFECTIVE MANNER. TO ACHIEVE AN ACOUSTICALLY-EFFECTIVE WINDOW AND DOOR CONSTRUCTION THE OPERABLE WIND9OW PANELS MUST FORM AN AIR-TIGHT SEAL WHEN IN THE CLOSED POSITION AND THE WINDOW FRAMES MUST BE CAULKED TO THE WALL OPENING AROUND THEIR ENTIRE PERIMETER WITH A NON-HARDENING CAULKING COMPOUND TO PREVENT SOUND INFILTRATION. DO NOT USE EXPANDABLE FOAM PRODUCTS.
PLEASE BE AWARE THAT MANY DUAL-PANE AND TRIPLE-PANE WINDOW AND GLASS DOOR ASSEMBLIES HAAVE INHERENT NOISE REDUCTIN PROBLEMS IN THE TRAFFIC NOISE FREQUENCY SPECTRUM DUE TO RESONANCE THAT OCCURES WITHIN THE AIR SPACE BETWEEN THE WINDOW LITES, AND THE NOISE REDUCTION CAPABILITIES VARY FROM MANUFACTURER TO MANUFACTURER. THEREFORE, THE ACOUSTICAL TEST REPORT OF ALL SOUND RATED WIJNDOWS AND GLASS DOORS SHOULD BE REVIEWED BY A QUALIFIED ACOUSTICIAN TO ENSURE THAT THE CHOSEN WINDOWS WILL ADEQUATELY REDUCE TRAFFIC NOISE TO ACCEPTABLE LEVELS.

THE IMPLEMINTENTATION OF THE ABOVE RECOMMENDED MEASURES WILL REDUCE UBTERUIR BIUSE EXPOSURES TO 45dB DNL OR LOWER AND 55 dBA Lmax OR LOWER.

DEVELOPMENT DATA TABLE:

PLAN	QUANTITY	SQUARE FOOTAGE	TOTAL SQ.FT.	BEDRMS.	BATHRMS.	REQUIRED COVERED PARKING PER UNIT	TOTAL REQUIRED COVERED PARKING	INCLUDED COVERED PARKING PER UNIT	TOTAL INCLUDED COVERED PARKING	LOCATION	REQUIRED UNCOVERED PARKING	TOTAL REQUIRED UNCOVERED PARKING	INCLUDED UNCOVERED PARKING	TOTAL INCLUDED UNCOVERED PARKING	LOCATION
"A" STANDARD	2	1,624.3	3,248.6	3	2.5	1	2	1	2	GARAGE	1.5	3	1.5	3	
"A" ADA	2	1,561.3	3,122.6	3	2.5	1	2	1	2	GARAGE	1.5	3	1.5	3	
"B" STANDARD	12	1,592.4	19,108.8	3	2.5	1	12	1	12	GARAGE	1.5	18	1.5	18	
GUEST PARKING											1 PER 4 UNITS	4	11	11	
TOTAL	16		25,480				16		16			28		35	

SITE DEVELOPMENT DATA TABLE:

SITE DEVELOPMENT BASED ON TABLE 18.18-2:		
	SITE REQUIREMENTS	PROPOSED
MULTI-FAMILY LOT AREA (MIN)	3,500 SQUARE FEET	43,437 SQUARE FEET
LOT WIDTH (MINIMUM)	50.00'	121.988'
LOT DEPTH (MINIMUM)	85.00'	353.48'
	STRUCTURE REQUIREMENTS	PROPOSED
SETBACKS (MINIMUM):		
FRONT	20.00'	30.10'
REAR	20.00'	69.80'
INTERIOR SIDE	5.00'	5.00'
STREET SIDE	15.00'	N/A
HEIGHT (MAXIMUM)	30.00'	29'-8"

OPEN SPACE REQUIREMENTS BASED ON TABLE 18.18-2		
COMMON USUABLE OPEN SPACE	15% ISTE AREA = 6,516 SQUARE FEET	6,799 SQUARE FEET
PRIVATE USABLE OPEN SPACE	16 UNITS * 50% * 48 SQUARE FEET = 384 SQUARE FEET	(4) PLAN A REAR YARD: 4 QTY. *5'*27' = 540 SQUARE FEET (12) PLAN B REAR YARD: Q2 QTY.*5*33.3' = 1,998 SQUARE FEET TOTAL PRIVATE SQ. FT.: 540 + 1,998 + 1,998 = 4,536 SQUARE FEET
FRONT PORCHES	16 UNITS * 50% = 8 UNITS	(12) PLAN B 5' X 6' FRONT PORCHES
BALCONY	16 UNITS * 25% = 4 UNITS	(12) PLAN B BALCONY: 12 QTY. * 9 * 18.5' = 1,998.00 SQUARE FEET

THESE DRAWINGS ARE THE PROPERTY OF OSITO HOLDINGS, LLC AND ARE INTENDED FOR USE SOLELY ON THE PROJECT TITLED HEREON. THESE DRAWINGS AS PROTECTED UNDER COPYRIGHT LAWS ARE NOT TO BE REPRODUCED IN WHOLE OR PART IN ANY MANNER WITHOUT THE EXPRESSED WRITTEN CONSENT OF THE DESIGNER. USE OF THESE DRAWINGS IS LIMITED TO THE SITE INTENDED AND THEIR USE AT ANY OTHER SITE, OR ON OTHER PROJECTS IS PROHIBITED EXCEPT BY PRIOR WRITTEN CONSENT OF THE DESIGNER. ALL REPRODUCTINS OF THESE DRAWINGS, IN WHOLE OR PART, REMAIN UNDER THE OWNERSHIP OF THE DESIGNER AND SHALL BE RETURNED UPON COMPLETION OF THE PROJECT OR UPON REQUEST OF THE DESIGNER.
COPYRIGHT © 2020

OWNER / DEVELOPER:
OSITO HOLDINGS, LLC
P.O. BOX 2827
MESA, AZ 85214
(480) 646.6323

PROJECT:
TENNANT SQUARE
215 TENNANT AVENUE
MORGAN HILL, CA.
COUNTY OF
SANTA CLARA

DRAWING:
ARCH. SITE DEVELOPMENT PLAN & DATA

LICENSED ARCHITECT
ZUISHIANG CHEN
REN. 5/31/25
STATE OF CALIFORNIA

REVISIONS:
⚠ 03.20.2025 PLAN CHECK RESPONSE
⚠ 05.08.2024 PLAN CHECK RESPONSE
⚠ 10.12.2024 PLAN CHECK RESPONSE

DATE: OCTOBER 30, 2024
SCALE: AS NOTED
DRAWN BY: G.E.MOORE
PROJ. MGR. G.E.MOORE
PROJECT FILE: 0.20-TENNANT
DRAWING: AS.1

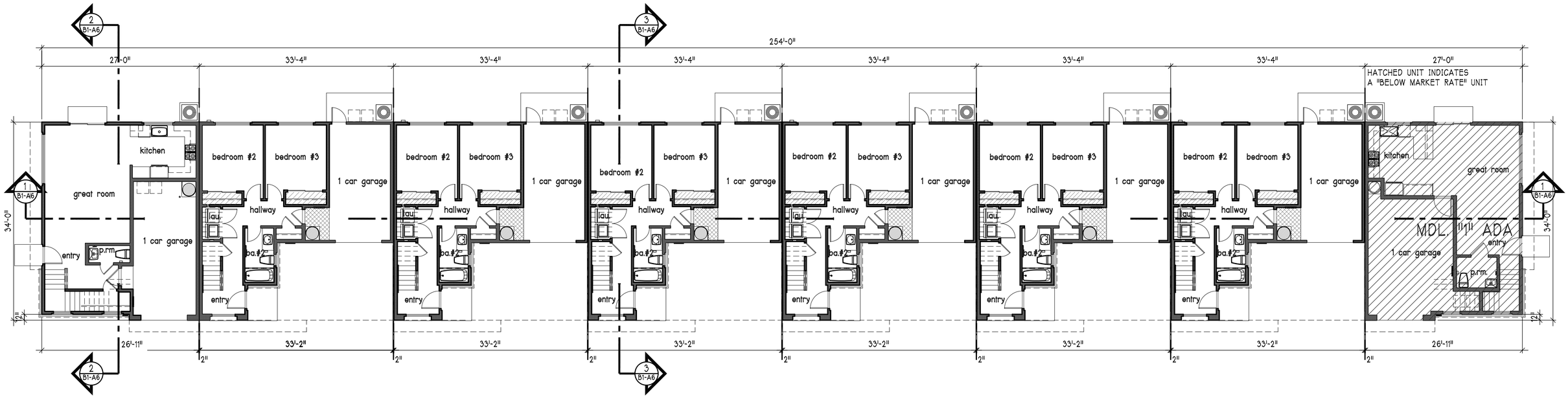

1ST LEVEL MASTER FLOOR PLAN

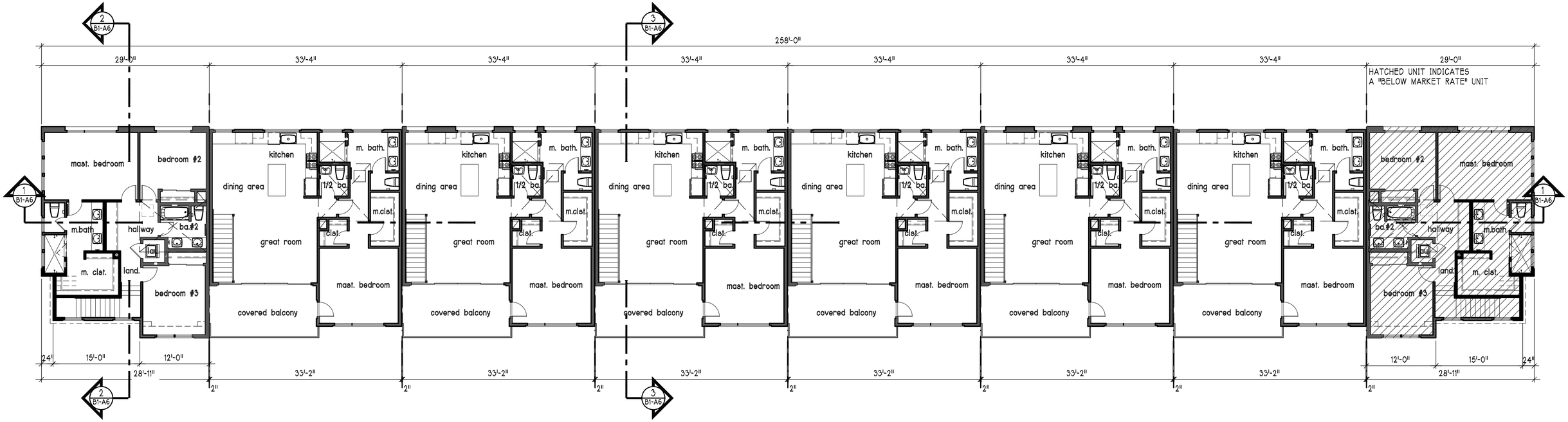

2ND LEVEL MASTER FLOOR PLAN

MASTER FLOOR PLAN BUILDING "1"

SCALE: 1/8" = 1'-0"

THESE DRAWINGS ARE THE PROPERTY OF OSITO HOLDINGS, LLC AND ARE INTENDED FOR USE SOLELY ON THE PROJECT TITLED HEREON. THESE DRAWINGS AS PROTECTED UNDER COPYRIGHT LAWS ARE NOT TO BE REPRODUCED IN WHOLE OR PART IN ANY MANNER WITHOUT THE EXPRESSED WRITTEN CONSENT OF THE DESIGNER. USE OF THESE DRAWINGS IS LIMITED TO THE SITE INTENDED AND THEIR USE AT ANY OTHER SITE, OR ON OTHER PROJECTS IS PROHIBITED EXCEPT BY PRIOR WRITTEN CONSENT OF THE DESIGNER. ALL REPRODUCTIONS OF THESE DRAWINGS, IN WHOLE OR PART, REMAIN UNDER THE OWNERSHIP OF THE DESIGNER AND SHALL BE RETURNED UPON COMPLETION OF THE PROJECT OR UPON REQUEST OF THE DESIGNER.

COPYRIGHT © 2020

OWNER / DEVELOPER:

OSITO HOLDINGS, LLC
P.O. BOX 2827
MESA, AZ 85214
(480) 646.6323

PROJECT:

TENNANT SQUARE
215 TENNANT AVENUE
MORGAN HILL, CA.
COUNTY OF
SANTA CLARA

DRAWING:

MASTER FLOOR PLAN BUILDING "1"

LICENSED ARCHITECT
ZUISHUANG CHEN
NO. C-28156
REN. 5/31/25
STATE OF CALIFORNIA

REVISIONS:
1 02.20.2025 PLAN CHECK RESPONSE

DATE: JUNE 03, 2024
SCALE: AS NOTED
DRAWN BY: G.E.MOORE
PROJ. MGR. G.E.MOORE
PROJECT FILE: 0.20-TENNANT
1 DRAWING: B1 A.0

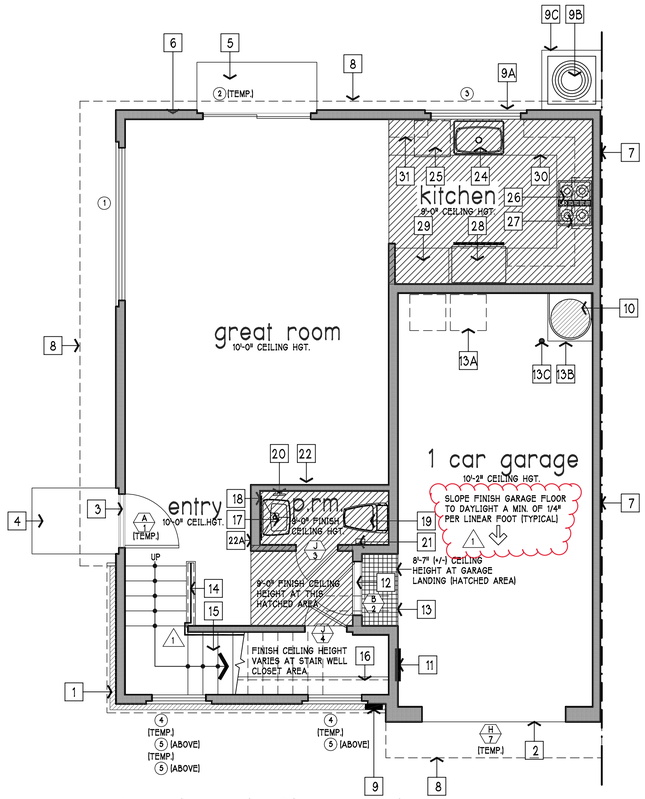

1st level floor plan

631.000 SQUARE FEET

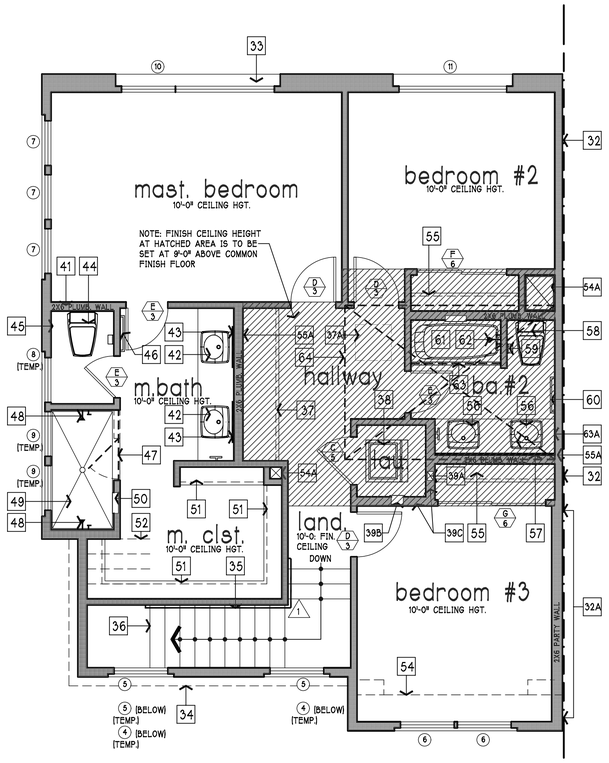

2nd level floor plan

886.000 SQUARE FEET

⚠ NOTE: LANDINGS AT THE REQUIRED EGRESS DOOR SHALL NOT BE MORE THAN 1 1/2" LOWER THAN THE TOP OF THE THRESHOLD. LANDINGS WITH DOORS THAT DO NOT SWING OVER THE LANDING OR DOORS OTHER THAN THE REQUIRED EGRESS DOOR MAY HAVE A DIFFERENCE IN ELEVATION OF 7 3/4" MAXIMUM BELOW THE TOP OF THE THRESHOLD (R311.3.1 - C.R.C.)

FLOOR PLAN "A" (notes and tags only)

SCALE: 1/4" = 1'-0"

1ST FLOOR LIVING AREA:	632.100 SQUARE FEET
2ND FLOOR LIVING AREA:	992.200 SQUARE FEET
TOTAL LIVING AREA:	1624.300 SQUARE FEET
GARAGE AREA:	278.600 SQUARE FEET

FLOOR PLAN KEYNOTES:

1ST FLOOR KEYNOTES:

EXTERIOR:

1. MASONRY VENEER EXTERIOR WALL FINISH (SEE EXT. ELEVATIONS)
2. GARAGE CONCRETE FLOOR NOSING
3. BRONZE ANODIZED ALUMINUM ENTRY THRESHOLD
4. 3'-8" X 4'-10" (+/-) CONCRETE FRONT DOOR LANDING W/ BROOM FINISH
5. 3'-0" X 6'-8" CONCRETE LANDING W/ BROOM FINISH
6. 2X6 STUD FRAMED EXTERIOR WALL TYPICAL UNLESS NOTED OTHERWISE
7. 2X4 COMMON UNIT D.F. STUD FRAMED FIRE WALL - SEE FRAMING DETAILS
8. CANTILEVERED FLOOR AT 2ND LEVEL
9. WALL MOUNT ELECTRIC PANEL W/ U-FER GROUND AND MAIN POWER SWITCH
9A. EXTERIOR WINDOW COMMON WALL LINE
9B. DECK MOUNT AIR-CONDITIONER LOCATION
9C. PRE-FABRICATED LIGHT WEIGHT CONCRETE A.C. PAD

GARAGE:

10. WATER HEATER SET W/ SIESMIC TRAPS TOP AND BOTTOM
11. ELECTRICAL SUB-PANEL LOCATION (VERIFY AT JOB SITE)
12. BRONZE ANODIZED ALUMINUM DOOR THRESHOLD
13. 2'-0" X 3'-4" CONCRETE LANDING W/ BROOM FINISH
13A. TRASH BIN LOCATION
13B. WATER HEATER BASE W/ 26GA. G.I. CAP AND FLASHING
13C. 4" DIA. COLLISION COLUMN FILL WITH CONCRETE (OPTIONAL)

STAIRCASE:

14. STAIR HANDRAIL SET 36" ABOVE COMMON STAIR TREAD NOSING
15. STAIR ASSEMBLY TO 2ND FLOOR (10" RUN W/ 7.333" RISER)
16. ENTRY CLOSET (BELOW STAIRS) POLE AND SHELF ASSEMBLY

POWDER ROOM (P.R.M.):

17. FREE STANDING PEDISTAL SINK LOCATION
18. WALL MOUNT MIRROR LOCATION
19. DECK MOUNT TOILET W/ MAX. 1.28 GAL. FLUSH CAPACITY
20. WALL MOUNT TOWEL RING
21. WALL MOUNT TOILET PAPER DISPENSER LOCATION
22. 2X4 STUD WALL W/ INSULATION
22A. 2X6 STUD FRAMED PLUMBING WALL

KITCHEN:

24. SINGLE COMPARTMENT KITCHEN W/ DISPOSAL UNIT
25. DISHWASHER LOCATION
26. 4 BURNER ELECTRIC RANGE W/ SELF-CLEANING OVEN BELOW
27. OVERHEAD RANGE HOOD W/ FAN, LIGHT AND MICRO-WAVE OVEN
28. REFRIGERATOR AND FREEZER LOCATION
29. 3'-0" WIDE, FULL HEIGHT WALL PANTRY AND STORAGE CABINET
30. LOWER KITCHEN CABINET ASSEMBLY
31. UPPER KITCHEN CABINET ASSEMBLY
32. 8" WIDE RANGE HOOD DUCT CHASE SOFFIT

FLOOR PLAN KEYNOTES:

2ND FLOOR KEYNOTES:

2ND FLOOR EXTERIOR:

32. 2X4 COMMON UNIT D.F. STUD FRAMED FIRE WALL - SEE FRAMING DETAILS
32A. 2X6 COMMON UNIT D.F. STUD FRAMED FIRE WALL - SEE FRAMING DETAILS
33. EXTERIOR WINDOW COMMON WALL LINE
34. 1ST FLOOR MASONRY VENEER PROFILE LINE BELOW

STAIR CASE & LANDING:

35. WALL MOUNT STAIR HANDRAIL SET 36" ABOVE COMMON STAIR TREAD NOSING
36. STAIR CASE ASSEMBLY TO 1ST FLOOR BELOW (10" RUN W/ 7.333" RISER) (TYPICAL)

HALLWAY:

37. UPPER AND LOWER LINEN CABINET ASSEMBLY
37A. 24" X 30" ATTIC CEILING ACCESS PANEL

LAUNDRY CLOSET:

38. STACKED CLOTHES WASHER AND DRYER LOCATION
39. THIS NUMBER NOT USED
39A. DRYER VENTING DUCT TO ROOF
39B. RECESSED WALL MOUNT HOT & COLD WATER HOOK UP LOCATION
39C. 2X6 STUD FRAMED PLUMBING WALL

MASTER BEDROOM:

40. 9'-0" CEILING SOFFIT LINE
41. 2X6 FRAMED PLUMBING WALL

MASTER BATHROOM:

42. BATHROOM SINK LOCATION
43. WALL MOUNT MIRROR
44. DECK MOUNT TOILET W/ MAX. 1.28 GAL. FLUSH CAPACITY
45. WALL MOUNT TOUILET PAPER DISPENSER LOCATION
46. WALL MOUNT TOWEL BAR
47. TEMPERED GLASS SHOWER DOOR
48. WALL MOUNT SHOWER HEAD AND SHOWER VALVE ASSEMBLY
49. 3'-6" X 6'-0" TILE SHOWER W/ NON-SLIP SURFACED SHOWER PAN
50. SOAP AND SHAMPOO WALL NICHE

MASTER BEDROOM CLOSET:

51. CLOSET POLE AND SHELF ASSEMBLY
52. STAIR ASSEMBLY BELOW

BEDROOM #2&#3:

53. 9'-0" CEILING SOFFIT LINE
54. 1ST FLOOR GARAGE WALL ASSEMBLY
54A. HVAC CHASE FROM ROOF MOUNT AIR HANDLER

BEDROOM #2 & #3 CLOSETS:

55. CLOSET POLE AND SHELF ASSEMBLY
55A. 2X6 STUD FRAMED PLUMBING WALL

BATHROOM #2:

56. BATHROOM SINK LOCATION
57. WALL MOUNT MIRROR
58. DECK MOUNT TOILET W/ MAX. 1.28 GAL. FLUSH CAPACITY
59. WALL MOUNT TOILET PAPER DISPENSER LOCATION
60. WALL MOUNT TOWEL BAR
61. 2'-6" X 5'-0" ENAMEL CAST IRON TUB W/ SHOWER
62. WALL MOUNT TUB FILLER AND SHOWER HEAD ASSEMBLY
63. SHOWER CURTAIN ROD
63A. WALL MOUNT TOWEL RING
64. HORIZONTAL ATTIC-MOUNT HVAC THIS LOCATION

THESE DRAWINGS ARE THE PROPERTY OF OSITO HOLDINGS, LLC AND ARE INTENDED FOR USE SOLELY ON THE PROJECT TITLED HEREON. THESE DRAWINGS AS PROTECTED UNDER COPYRIGHT LAWS ARE NOT TO BE REPRODUCED IN WHOLE OR PART IN ANY MANNER WITHOUT THE EXPRESSED WRITTEN CONSENT OF THE DESIGNER. USE OF THESE DRAWINGS IS LIMITED TO THE SITE INTENDED AND THEIR USE AT ANY OTHER SITE, OR ON OTHER PROJECTS IS PROHIBITED EXCEPT BY PRIOR WRITTEN CONSENT OF THE DESIGNER. ALL REPRODUCTINS OF THESE DRAWINGS, IN WHOLE OR PART, REMAIN UNDER THE OWNERSHIP OF THE DESIGNER AND SHALL BE RETURNED UPON COMPLETION OF THE PROJECT OR UPON REQUEST OF THE DESIGNER.

COPYRIGHT © 2020

OWNER / DEVELOPER:

OSITO HOLDINGS, LLC
P.O. BOX 2827
MESA, AZ 85214
(480) 646.6323

PROJECT:

TENNANT SQUARE
215 TENNANT AVENUE
MORGAN HILL, CA.
COUNTY OF
SANTA CLARA

DRAWING:

FLOOR PLAN "A" - (notes & tags only)

LICENSED ARCHITECT
ZUISHUANG CHEN
NO. C-28156
REN. 5/31/25
STATE OF CALIFORNIA

REVISIONS:
⚠ 02.20.2025 PLAN CHECK RESPONSE

DATE: JUNE 03, 2024
SCALE: AS NOTED
DRAWN BY: G.E.MOORE
PROJ. MGR. G.E.MOORE
PROJECT FILE: 0.20-TENNANT
DRAWING: B1-A.1

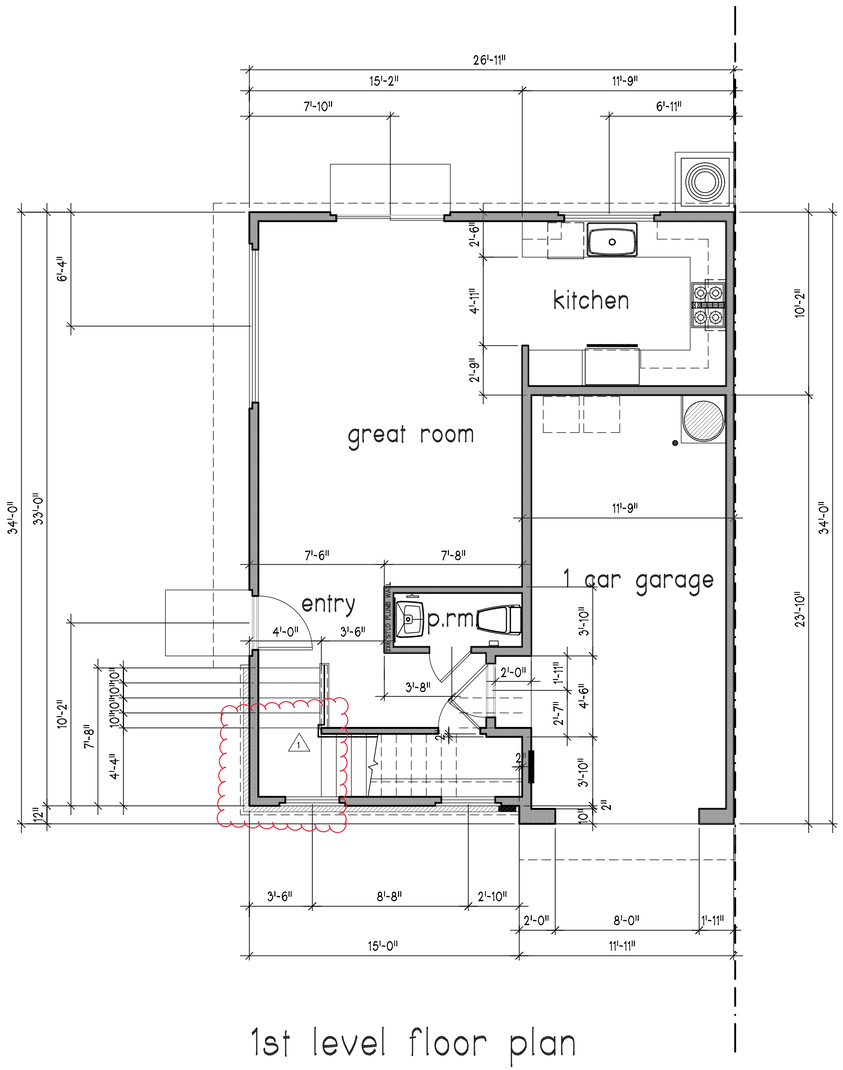

1st level floor plan

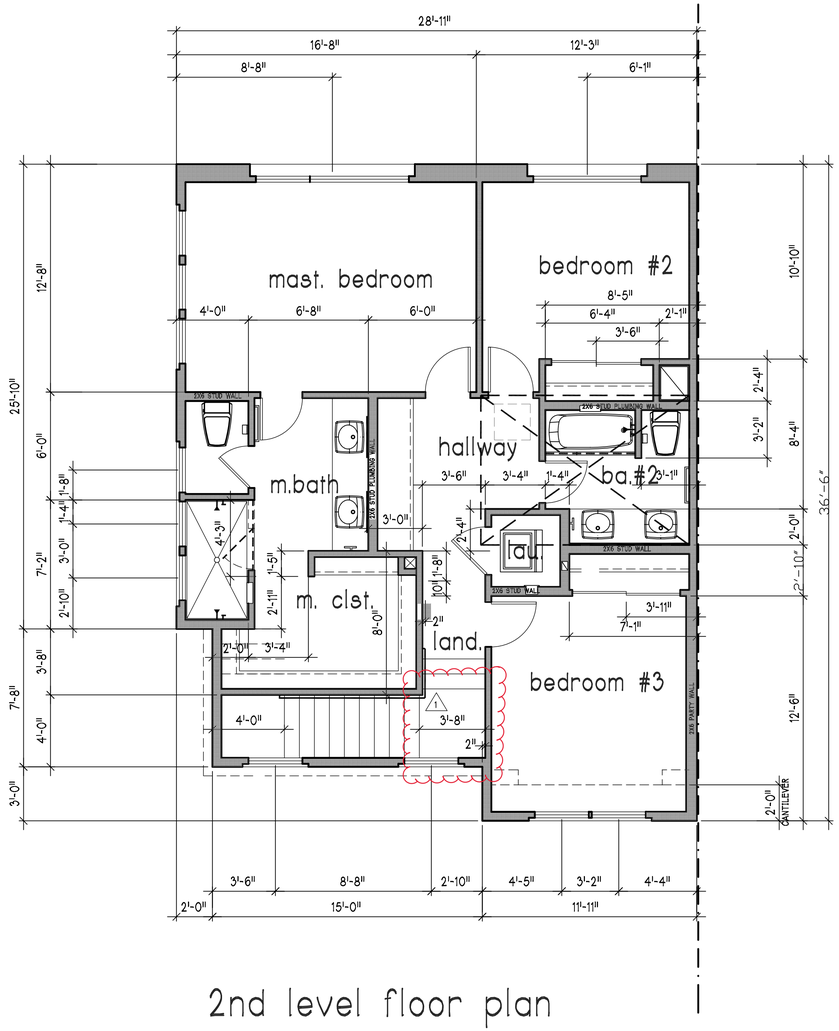

2nd level floor plan

FLOOR PLAN UNIT "A" (dimensions only)

SCALE: 1/4" = 1'-0"

THESE DRAWINGS ARE THE PROPERTY OF OSITO HOLDINGS, LLC AND ARE INTENDED FOR USE SOLELY ON THE PROJECT TITLED HEREON. THESE DRAWINGS AS PROTECTED UNDER COPYRIGHT LAWS ARE NOT TO BE REPRODUCED IN WHOLE OR PART IN ANY MANNER WITHOUT THE EXPRESSED WRITTEN CONSENT OF THE DESIGNER. USE OF THESE DRAWINGS IS LIMITED TO THE SITE INTENDED AND THEIR USE AT ANY OTHER SITE, OR ON OTHER PROJECTS IS PROHIBITED EXCEPT BY PRIOR WRITTEN CONSENT OF THE DESIGNER. ALL REPRODUCTING OF THESE DRAWINGS, IN WHOLE OR PART, REMAIN UNDER THE OWNERSHIP OF THE DESIGNER AND SHALL BE RETURNED UPON COMPLETION OF THE PROJECT OR UPON REQUEST OF THE DESIGNER.

COPYRIGHT © 2020

OWNER / DEVELOPER:

OSITO HOLDINGS, LLC
P.O. BOX 2827
MESA, AZ 85214
(480) 646.6323

PROJECT:

TENNANT SQUARE
215 TENNANT AVENUE
MORGAN HILL, CA.
COUNTY OF
SANTA CLARA

DRAWING:

FLOOR PLAN UNIT "A" – (dimensions only)

LICENSED ARCHITECT
ZUISHUANG CHEN
NO. C-28158
REN. 5/31/25
STATE OF CALIFORNIA

REVISIONS:
⚠1 02.20.2025 PLAN CHECK RESPONSE

DATE: JUNE 03, 2024
SCALE: AS NOTED
DRAWN BY: G.E.MOORE
PROJ. MGR. G.E.MOORE
PROJECT FILE: 0.20-TENNANT
DRAWING: B1-A11

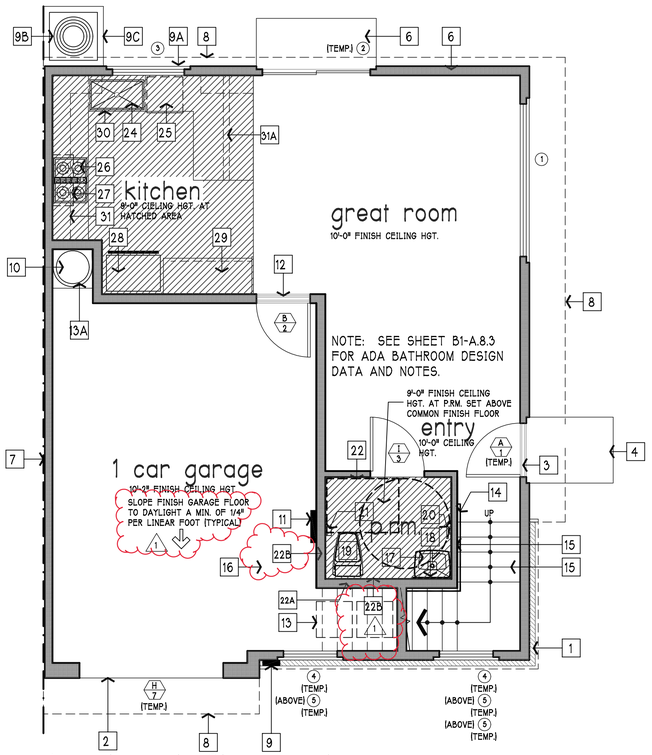

1st level floor plan

631.000 SQUARE FEET

FLOOR PLAN KEYNOTES:

1ST FLOOR KEYNOTES:

EXTERIOR:

1	MASONRY VENEER EXTERIOR WALL FINISH (SEE EXT. ELEVATIONS)
2	GARAGE CONCRETE FLOOR NOSING
3	BRONZE ANODIZED ALUMINUM ENTRY THRESHOLD
4	3'-8" X 4'-10" (+/-) CONCRETE FRONT DOOR LANDING W/ BROOM FINISH
5	3'-0" X 6'-8" CONCRETE LANDING W/ BROOM FINISH
6	2X6 STUD FRAMED EXTERIOR WALL TYPICAL UNLESS NOTED OTHERWISE
7	2X4 COMMON UNIT D.F. STUD FRAMED FIRE WALL - SEE FRAMING DETAILS
8	CANTILEVERED FLOOR AT 2ND LEVEL
9	WALL MOUNT ELECTRIC PANEL W/ U-FEED GROUND AND MAIN POWER SWITCH
9A	EXTERIOR WINDOW COMMON WALL LINE
9B	DECK MOUNT AIR-CONDITIONER LOCATION
9C	PRE-FABRICATED LIGHT WEIGHT CONCRETE A.C. PAD

GARAGE:

10	WATER HEATER SET W/ SIESMIC TRAPS TOP AND BOTTOM
11	ELECTRICAL SUB-PANEL LOCATION (VERIFY AT JOB SITE)
12	BRONZE ANODIZED ALUMINUM DOOR THRESHOLD
13	TRASH BIN LOCATION
13A	WATER HEATER BASE W/ 26GA. G.I. CAP AND FLASHING

STAIRCASE:

14	STAIR HANDRAIL SET 36" ABOVE COMMON STAIR TREAD NOSING
15	STAIR ASSEMBLY TO 2ND FLOOR (10" RUN W/ 7.333" RISER)
16	STAIR ASSEMBLY ABOVE GARAGE AREA

POWDER ROOM (P.RM.):

17	WALL-MOUNT SINK
18	WALL MOUNT MIRROR LOCATION
19	DECK MOUNT TOILET W/ MAX. 1.28 GAL. FLUSH CAPACITY
20	WALL MOUNT TOWEL RING
21	WALL MOUNT TOILET PAPER DISPENSER LOCATION
22	2X4 STUD WALL W/ INSULATION
22A	2X6 STUD FRAMED PLUMBING WALL
22B	INSTALL SOLID BLOCKING AS REQUIRED FOR FUTURE WALL MOUNT GRAB BARS (SEE DETAIL SHEET 9A.8.5*)

KITCHEN:

23	8" WIDE HOOD VENT SOFFIT SET 9'-0" ABOVE COMMON FINISH FLOOR
24	SINGLE COMPARTMENT KITCHEN W/ DISPOSAL UNIT
25	DISHWASHER LOCATION
26	4 BURNER ELECTRIC RANGE W/ SELF-CLEANING OVEN BELOW
27	OVERHEAD RANGE HOOD W/ FAN, LIGHT AND MICRO-WAVE OVEN
28	REFRIGERATOR AND FREEZER LOCATION
29	3'-0" WIDE, FULL HEIGHT WALL PANTRY AND STORAGE CABINET
30	LOWER KITCHEN CABINET ASSEMBLY W/ 2 PORTABLE CUTTING AND FOOD PREPARTION BOARDS IN CONFORMANCE W/ ADA REGULATIONS AND DESIGN STANDARDS
31	UPPER KITCHEN CABINET ASSEMBLY
31A	4" THK. HALF COUNTER WALL BELOW

NOTE: LANDINGS AT THE REQUIRED EGRESS DOOR SHALL NOT BE MORE THAN 1 1/2" LOWER THAN THE TOP OF THE THRESHOLD. LANDINGS WITH DOORS THAT DO NOT SWING OVER THE LANDING OR DOORS OTHER THAN THE REQUIRED EGRESS DOOR MAY HAVE A DIFFERENCE IN ELEVATION OF 7 3/4" MAXIMUM BELOW THE TOP OF THE THRESHOLD (R311.3.1 - C.R.C.)

NOTE: THRESHOLDS AT THE PRIMARY ENTRY AND REQUIRED EXIT DOORS SHALL BE NO HIGHER THAN 1/2 INCH. THRESHOLDS AT SECONDARY EXTERIOR DOORS, INCLUDING SLIDING DOOR TRACKS, SHALL BE NO HIGHER THAN 3/4 INCH. CHANGES IN HEIGHT AT INTERIOR DOOR THRESHOLDS (E.G., FLOOR MATERIAL CHANGES AT DOOR THRESHOLDS) SHALL NOT EXCEED 1/2 INCH. THRESHOLDS SHALL COMPLY WITH THE FOLLOWING PER C.B.C 1132A.4.1:
A. THRESHOLDS WITH A CHANGE IN HEIGHT OF NOT MORE THAN 1/4 INCH (6.35mm) MAY BE VERTICAL.
B. THRESHOLDS WITH A CHANGE IN HEIGHT BETWEEN 1/4 INCH (6.35mm) AND 3/4 INCH (19.05mm) SHALL BE BEVELED WITH A SLOPE NO GREATER THAN 1 UNIT VERTICAL IN 2 UNITS HORIZONTAL (50-PERCENT SLOPE)

NOTE: A.D.A. KITCHEN CABINET COMPLIANT DESIGN DATA:
CLEAR FLOOR OR GROUND SPACE: (804.3.1)
A CLEAR FLOOR SPACE COMPLYING WITH 305 POSITIONED FOR A FORWARD APPROACH SHALL BE PROVIDED. THE CLEAR FLOOR OR GROUND SPACE SHALL BE CENTERED ON THE KITCHEN WORK SURFACE AND SHALL PROVIDE KNEE AND TOE CLEARANCE COMPLYING WITH 306.
EXCEPTIONS:
CABINETRY SHALL BE PERMITTED UNDER THE KITCHEN WORK SURFACE PROVIDED THAT ALL OF THE FOLLOWING CONDITIONS ARE MET:
(a) THE CABINETRY CAN BE REMOVED WITHOUT REMOVAL OR REPLACEMENT OF THE KITCHEN WORK SURFACE.
(b) THE FINISH FLOOR EXTENDS UNDER THE CABINETRY: AND
(c) THE WALLS BEHIND AND SURROUNDING THE CABINETRY ARE FINISHED.

FLOOR PLAN "A" - A.D.A. UNIT (notes and tags only)

SCALE: 1/4" = 1'-0"

1ST FLOOR LIVING AREA:	569.100 SQUARE FEET
2ND FLOOR LIVING AREA:	992.200 SQUARE FEET
TOTAL LIVING AREA:	1,561.300 SQUARE FEET
GARAGE AREA:	341.600 SQUARE FEET

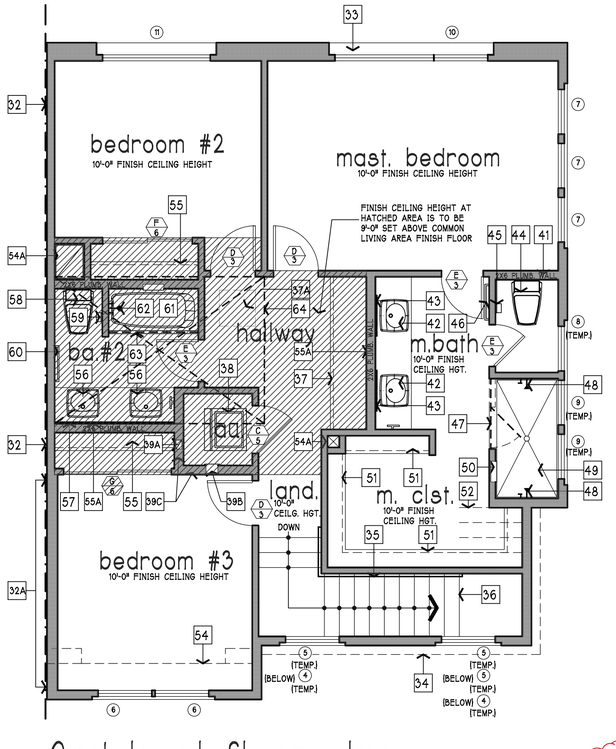

2nd level floor plan

886.000 SQUARE FEET

FLOOR PLAN KEYNOTES:

2ND FLOOR KEYNOTES:

2ND FLOOR EXTERIOR:

32	2X4 COMMON UNIT D.F. STUD FRAMED FIRE WALL - SEE FRAMING DETAILS
32A	2X6 COMMON UNIT D.F. STUD FRAMED FIRE WALL - SEE FRAMING DETAILS
33	EXTERIOR WINDOW COMMON WALL LINE
34	1ST FLOOR MASONRY VENEER PROFILE LINE BELOW

STAIR CASE & LANDING:

35	WALL MOUNT STAIR HANDRAIL SET 36" ABOVE COMMON STAIR TREAD NOSING
36	STAIR CASE ASSEMBLY TO 1ST FLOOR BELOW (10" RUN W/ 7.333" RISER) (TYPICAL)

HALLWAY:

37	UPPER AND LOWER LINEN CABINET ASSEMBLY
37A	24" X 30" ATTIC ACCESS PANEL LOCATION

LAUNDRY CLOSET:

38	STACKED CLOTHES WASHER AND DRYER LOCATION
39	THIS NUMBER NOT USED
39A	DRYER VENTING DUCT TO ROOF
39B	RECESSED WALL MOUNT HOT & COLD WATER HOOK UP LOCATION
39C	2X6 STUD FRAMED PLUMBING WALL

MASTER BEDROOM:

40	9'-0" CEILING SOFFIT LINE
41	2X6 FRAMED PLUMBING WALL

MASTER BATHROOM:

42	BATHROOM SINK LOCATION
43	WALL MOUNT MIRROR
44	DECK MOUNT TOILET W/ MAX. 1.28 GAL. FLUSH CAPACITY
45	WALL MOUNT TOUILET PAPER DISPENSER LOCATION
46	WALL MOUNT TOWEL BAR
47	TEMPERED GLASS SHOWER DOOR
48	WALL MOUNT SHOWER HEAD AND SHOWER VALVE ASSEMBLY
49	3'-0" X 6'-0" TILE SHOWER W/ NON-SLIP SURFACED SHOWER PAN
50	SOAP AND SHAMPOO WALL NICHE

MASTER BEDROOM CLOSET:

51	CLOSET POLE AND SHELF ASSEMBLY
52	STAIR ASSEMBLY BELOW

BEDROOM #2&#3:

53	9'-0" CEILING SOFFIT LINE
54	1ST FLOOR GARAGE WALL ASSEMBLY
54A	HVAC CHASE FROM ROOF MOUNT AIR HANDLER

BEDROOM #2 & #3 CLOSETS:

55	CLOSET POLE AND SHELF ASSEMBLY
55A	2X6 STUD FRAMED PLUMBING WALL

BATHROOM #2:

56	BATHROOM SINK LOCATION
57	WALL MOUNT MIRROR
58	DECK MOUNT TOILET W/ MAX. 1.28 GAL. FLUSH CAPACITY
59	WALL MOUNT TOILET PAPER DISPENSER LOCATION
60	WALL MOUNT TOWEL BAR
61	2'-6" X 5'-0" ENAMEL CAST IRON TUB W/ SHOWER
62	WALL MOUNT TUB FILLER AND SHOWER HEAD ASSEMBLY
63	SHOWER CURTAIN ROD
63A	WALL MOUNT TOWEL RING
64	HORIZONTAL ATTIC-MOUNT ACCESS THIS LOCATION

NOTE: A.D.A. KITCHEN CABINET COMPLIANT DESIGN DATA:
CABINET HEIGHT (804.3.2)
THE KITCHEN WORK SURFACE SHALL BE 34 INCHES (865 mm) MAXIMUM ABOVE THE FINISH FLOOR OR GROUND.
EXCEPTION:
A COUNTER THAT IS ADJUSTABLE TO PROVIDE A KITCHEN WORK SURFACE AT VARIABLE HEIGHTS, 29 INCHES (735 mm) MINIMUM AND 36 INCHES (915 mm) MAXIMUM, SHALL BE PERMITTED.

NOTE: A.D.A. KITCHEN CABINET COMPLIANT DESIGN DATA:
CABINET EXPOSED SURFACES. (804.3.3)
THERE SHALL BE NO SHARP OR ABRASIVE SURFACES UNDER THE WORK SURFACE COUNTERS.
SINKS. (804.4)
SINKS SHALL COMPLY WITH SECTION 606.
STORAGE. (804.5)
AT LEAST 50 PERCENT OF SHELF SPACE IN STORAGGE FACILITIES SHALL COMPLY WITH SECTION 811.
APPLIANCES. (804.6)
WHERE PROVIDED, KITCHEN APPLIANCES SHALL COMPLY WITH SECTION 804.6.
CLEAR FLOOR OR GROUND SPACE. (804.6.1)
A CLEAR FLOOR OR GROUND SPACED COMPLYING WITH 305 SHALL BE PROVIDED AT EACH KITCHEN APPLIANCE. CLEAR FLOOR OR GROUND SPACES SHALL BE PERMITTED TO OVERLAP.
OPERABLE PARTS. (804.62)
APPLIANCE CONTROLS SHALL COMPLY WITH SECTION 309.
EXCEPTIONS:
1. APPLIANCE DOORS AND DOOR LATCHING DEVICES SHALL NOT BE REQUIRED TO COMPLY WITH SECTION 309.4
2. BOTTOM-HINGED APPLIANCE DOORS, WHEN IN THE OPEN POSITION, SHALL NOT BE REQUIRED TO COMPLY WITH SECTION 309.3.

NOTE: A.D.A. KITCHEN CABINET COMPLIANT DESIGN DATA:
DISHWASHER. (804.6.3)
CLEAR FLOOR OR GROUND SPACE SHALL BE POSITIONED ADJACENT TO THE DISHWASHER DOOR. THE DISHWASHER DOOR, IN THE OPEN POSITION, SHALL NOT OBSTURCT THE CLEAR FLOOR OR GROUND SPACE FOR THE DISHWASHER OR THE SINK.
RANGE OR COOKTOP. (804.6.4)
WHERE A FORWARD APPROACH IS PROVIDED, THE CLEAR FLOOR OR GROUND SPACE SHALL PROVIDE KNEE AND TOE CLEARANCE COMPLYING WITH 306. WHERE KNEE AND TOE SPACE IS PROVIDED, THE UNDERSIDE OF THE RANGE OR COOKTOP SHALL BE INSULATED OR OTHERWISE CONFIGURED TO PREVENT BURNS, ABRASIONS, OR ELECTRICAL SHOCK. THE LOCATION OF CONTROLS SHALL NOT REQUIRE REACHING ACROSS BURNERS.
OVEN. (804.6.5)
OVENS SHALL COMPLY WITH SECTION 804.6.5.
SIDE-HINGED DOOR OVENS. (804.6.5.1)
SIDE-HINGED DOOR OVENS SHALL HAVE THE WORK SURFACE REQUIRED BY SECTION 804.3. POSITIONED ADJACENT TO THE LATCH SIDE OF THE OVEN DOOR.
BOTTOM-HINGED DOOR OVENS. (804.6.5.2)
BOTTOM-HINGED DOOR OVENS SHALL HAVE THE WORK SURFACE REQUIRED BY SECTION 804.3. POSITIONED ADJACENT TO ONE SIDE OF THE DOOR.
CONTGROLS. (804.6.5.3)
OVENS SHALL HAVE CONTROLS ON FRONT PANELS.
REFRIGERATOR / FREEZER. (804.6.6)
CONBINATION REFRIGERATORS AND FREEZERS SHALL HAVE AT LEAST 50 PERCENT OF THE FREEZER SPACE 54 INCHES (1370 mm) MAXIMUM ABVOVE THE FINISH FLOOR OR GROUND. THE CLEAR FLOOR OR GROUND SPACE SHALL ABE POSITIONED FOR A PARALLEL APPROACH TO THE SPACE DEDICATED TO A REFRIGERATOR/FREEZER WITH THE CENTERLINE OF THE CLEAR FLOOR OR GROUND SPACE OFFSET 24 INCHES (610mm) MAXIMUM FROM THE CENTERLINE OF THE DEDICATED SPACE.

THESE DRAWINGS ARE THE PROPERTY OF OSITO HOLDINGS, LLC AND ARE INTENDED FOR USE SOLELY ON THE PROJECT TITLED HEREON. THESE DRAWINGS AS PROTECTED UNDER COPYRIGHT LAWS ARE NOT TO BE REPRODUCED IN WHOLE OR PART IN ANY MANNER WITHOUT THE EXPRESSED WRITTEN CONSENT OF THE DESIGNER. USE OF THESE DRAWINGS IS LIMITED TO THE SITE INTENDED AND THEIR USE AT ANY OTHER SITE, OR ON OTHER PROJECTS IS PROHIBITED EXCEPT BY PRIOR WRITTEN CONSENT OF THE DESIGNER. ALL REPRODUCTINS OF THESE DRAWINGS, IN WHOLE OR PART, REMAIN UNDER THE OWNERSHIP OF THE DESIGNER AND SHALL BE RETURNED UPON COMPLETION OF THE PROJECT OR UPON REQUEST OF THE DESIGNER.
COPYRIGHT © 2020

OWNER / DEVELOPER:
OSITO HOLDINGS, LLC
P.O. BOX 2827
MESA, AZ 85214
(480) 646.6323

PROJECT:
TENNANT SQUARE
215 TENNANT AVENUE
MORGAN HILL, CA.
COUNTY OF
SANTA CLARA

DRAWING:
FLOOR PLAN "A" - ADA - (notes & tags only)

LICENSED ARCHITECT
ZUISHUANG CHEN
NO. C-28156
REN. 5/31/25
STATE OF CALIFORNIA

REVISIONS:
1. 02.20.2025 PLAN CHECK RESPONSE
2. 02.09.2024 PLAN CHECK RESPONSE

DATE: JUNE 03, 2024
SCALE: AS NOTED
DRAWN BY: G.E.MOORE
PROJ. MGR. G.E.MOORE
PROJECT FILE: 0.20-TENNANT
DRAWING: B1-A.2

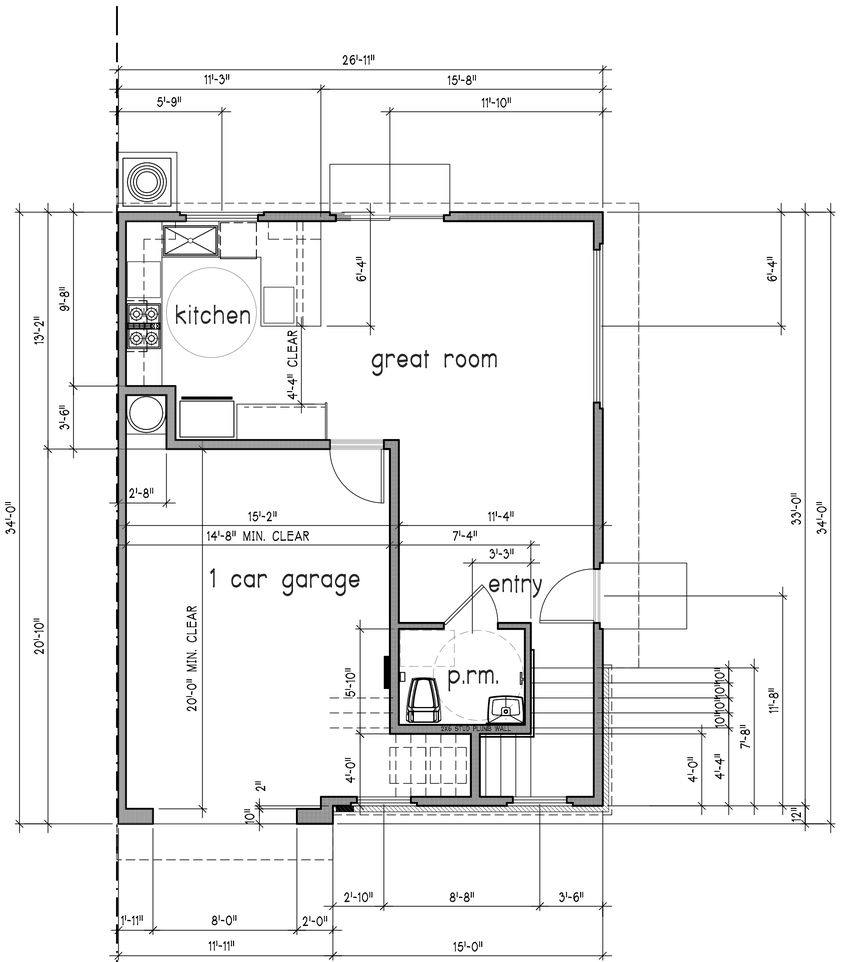

1st level floor plan

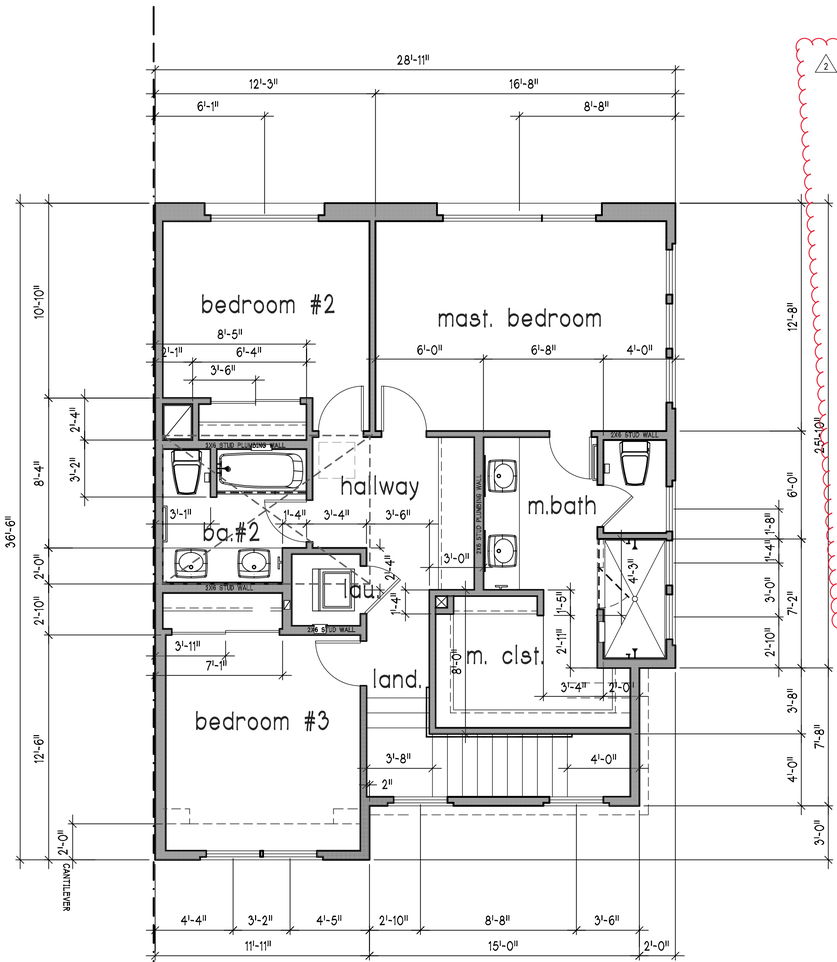

2nd level floor plan

⚠2 ACCESSIBLE UNIT KITCHEN NOTES:

CLEAR FLOOR SPACE:

- A CLEAR FLOOR SPACE AT LEAST 30 INCHES [762 mm] BY 48 INCHES [1219 mm] THAT ALLOWS A PARALLEL APPROACH BY A PERSON IN A WHEELCHAIR SHALL BE PROVIDED AT THE RANGE OR COOKTOP.
- A CLEAR FLOOR SPACE AT LEAST 30 INCHES [762 mm] BY 48 INCHES [1219 mm] THAT ALLOWS EITHER A PARALLEL OR FORWARD APPROACK SHALL BE PROVIDED AT THE KITCHEN SINK AND ALL OTHER FIXTURES OR APPLIANCES INCLUDING THE OVEN, DISHWASHER, REFRIGERATOR/FREEZER AND TRASH COMPACTOR.
- A CLEAR FLOOR SPACE AT LEAST 30 INCHES [762 mm] BY 48 INCHES [1219 mm] THAT ALLOWS EITHER A PARALLEL OR FORWARD APPROACH SHALL BE PROVIDED AT THE WORK SURFACE REQUIRED BY SECTION 1133A.4.
- THE CENTERLINE OF THE 30-INCH [762 mm] BY 48-INCH [1219 mm] CLEAR FLOOR SPACE PROVIDED FOR PARALLEL OR FORWARD APPROACH SHALL BE ALIGNED WITH THE CENTERLINE OF THE WORK SPACE, APPLIANCE OR FIXTURE.

CLEAR WIDTH:

- U-SHAPED KITCHENS, DESIGNED WITH PARALLEL APPROACH AT A RANGE OR COOKTOP LOCATED AT THE BASE OF THE U, SHALL HAVE A MINIMUM CLEAR WIDTH OF AT LEAST 60 INCHES [1524 mm]. (SEE FIGURE 11AL-10A)
- U-SHAPED KITCHENS, DESIGNED WITH A COOKTOP OR SINK LOCATED AT THE BASE OF THE U, WHICH PROVIDES A KNEE AND TOE SPACE IN ACCORDANCE WITH SECTION 1133A.7 TO ALLOW FOR A FORWARD APPROACH, SHALL HAVE A CLEAR WIDTH OF AT LEAST 48 INCHES [1219 mm]. (SEE FIGURE 11A-10A)
- ALL OTHER KITCHEN DESIGNS SHALL PROVIDE A MINIMUM CLEAR WIDTH OF AT LEAST 48 INCHES [1219 mm]. (SEE FIGURE 11A-10A)

REMOVABLE BASE CABINETS:

- SINKS AND WORK SURFACES REQUIRED BY SECTION 1133A.4 (SEE ITEM 1 AND ITEM 2) SHALL BE PROVIDED WITH KNEE AND TOE SPACE COMPLYING WITH SECTION 1133A.7. BASE CABINETS (INCLUDING TOE BOARD AND SHELVING) DIRECTLY UNDER KITCHEN SINKS AND WORK SURFACES SHALL BE REMOVABLE WITHOUT THE USE OF SPECIALIZED TOOLS OR SPECIALIZED KNOWLEDGE IN ORDER TO PROVIDE KNEE AND TOE SPACE. THE FINISH FLOOR BENEATH KITCHEN SINKS AND WORK SURFACES SHALL BE EXTENDED TO THE WALL.

COUNTERTOPS:

- A MINIMUM LINEAR LENGTH OF 30 INCHES [762 mm] OF COUNTERTOP SHALL BE PROVIDED FOR THE KITCHEN SINK INSTALLATION.
- A MINIMUM LINEAR LENGTH OF 30 INCHES [762 mm] OF COUNTERTOP SHALL BE PROVIDED FOR A WORK SURFACE.
- SINKS AND WORK SURFACES MAY E A SINGLE INTEGRAL UNIT A MINIMUM OF 60 INCHES [1574 mm] IN LENGTH, OR BE SEPARATE COMPONENTS.
- EXCEPTION: TWO 15-IINCH (381 mm) WIDE MINIMUM BREADBOARDS MAY BE PROVIDED IN LIEU OF THE REQUIRED 30 INCHES [762 mm] OF COUNTERTOP WORK SURFACE.

REPOPSITIONABLE COUNTERTOPS:

- SINKS AND WORK SURFACES REQUIRED BY SECTION 1133A.4 SHALL BE DESIGNED TO ENABLE REPOSITIONING TO A MINIMUM HFEIGHT OF 28 INCHES [711 mm].
- BASE CABINETS DIRECTLY UNDER SINKS AND WORK SURFACES SHALL BE REMOVABLE AS REQUIRED IN SECTION 1133A.3.
- THE SIDES OF ADJACENT CABINETS AND THE BACK WALL, WHICH MAY BECOME EXPOSED TO MOISTURE OR FOOD HANDLING WHEN A COUNTERTOP IS LOWERED, SHALL BE CONSTRUCTED OF DURABLE, NONABSORBENT MATERIALS APPROPRIATE FOR SUCH USES.
- FINISH FLOORING SHALL BE EXTENDED TO THE WALL BENEATH THE SINK AND WORK SURFACE.
  EXCEPTIONS:
  - STONE, CULTURED STONE AND TILED COUNTERTOPS MAY BE USED WITHOUT MEETING THE REPOSITIONING REQUIREMENTS.
  - TWO 15-INCH (381 mm) WIDE MINIMUM BREADBOARDS MAY BE PROVIDED IN LIEU OF THE REQUIRED 30 INCHES [762 mm] OF COUNTERTOP WORK SURFACE, AND USED WITHOUT MEETING THE REPOSITIONING REQUIREMENTS.

KNEE AND TOE SPACE:

- THE KNEE AND TOE SPACE SHALL BE CLEAR AND UNOBSTRUCTED, OR REMOVABLE BASE CABINETS IN COMPLIANCE WITH SECTION 1133A.3 SHALL BE PROVIDED.
- THE KNEE AND TOE SPACE SHALL BE 30 INCHES [762 mm] WIDE MINIMUM, CENTERED ON THE SINK, COUNTERTOP OR APPLIANCE.
- A CLEAR FLOOR SPACE SHALL NOT EXTEND INTO THE KNEE AND TOE SPACE MORE THAN 19 INCHES [483 mm].

PLUMBING PROTECTIONS:

- WATER SUPPLY AND DRAIN PIPES UNDER KITCHEN SINKS SHALL BE INSTALLED OR OTHERWISE COVERED TO PROTECT AGAINST CONTACT. THERE SHALL BE NO SHAP OR ABRASIVE SURFACES UNDER KITCHEN SINKS.

FLOOR PLAN UNIT "A" - A.D.A. UNIT (dimensions only)

SCALE: 1/4" = 1'-0"

THESE DRAWINGS ARE THE PROPERTY OF OSITO HOLDINGS, LLC AND ARE INTENDED FOR USE SOLELY ON THE PROJECT TITLED HEREON. THESE DRAWINGS AS PROTECTED UNDER COPYRIGHT LAWS ARE NOT TO BE REPRODUCED IN WHOLE OR PART IN ANY MANNER WITHOUT THE EXPRESSED WRITTEN CONSENT OF THE DESIGNER. USE OF THESE DRAWINGS IS LIMITED TO THE SITE INTENDED AND THEIR USE AT ANY OTHER SITE, OR ON OTHER PROJECTS IS PROHIBITED EXCEPT BY PRIOR WRITTEN CONSENT OF THE DESIGNER. ALL REPRODUCTING OF THESE DRAWINGS, IN WHOLE OR PART, REMAIN UNDER THE OWNERSHIP OF THE DESIGNER AND SHALL BE RETURNED UPON COMPLETION OF THE PROJECT OR UPON REQUEST OF THE DESIGNER.

COPYRIGHT © 2020

OWNER / DEVELOPER:

OSITO HOLDINGS, LLC
P.O. BOX 2827
MESA, AZ 85214
(480) 646.6323

PROJECT:

TENNANT SQUARE
215 TENNANT AVENUE
MORGAN HILL, CA.
COUNTY OF
SANTA CLARA

DRAWING:

FLOOR PLAN UNIT "A" - ADA - (dims. only)

LICENSED ARCHITECT
ZUISHUANG CHEN
NO. C-28156
REN. 5/31/25
STATE OF CALIFORNIA

REVISIONS:
⚠2 02.08.2024 PLAN CHECK RESPONSE

DATE: JUNE 03, 2024
SCALE: AS NOTED
DRAWN BY: G.E.MOORE
PROJ. MGR. G.E.MOORE
PROJECT FILE: 0.20-TENNANT
DRAWING: B1-A21

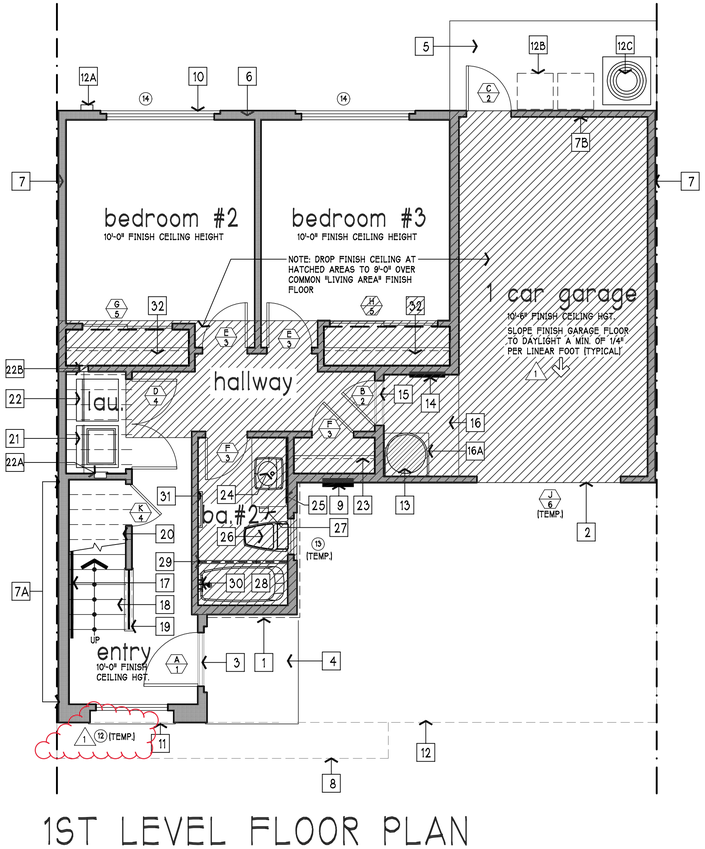

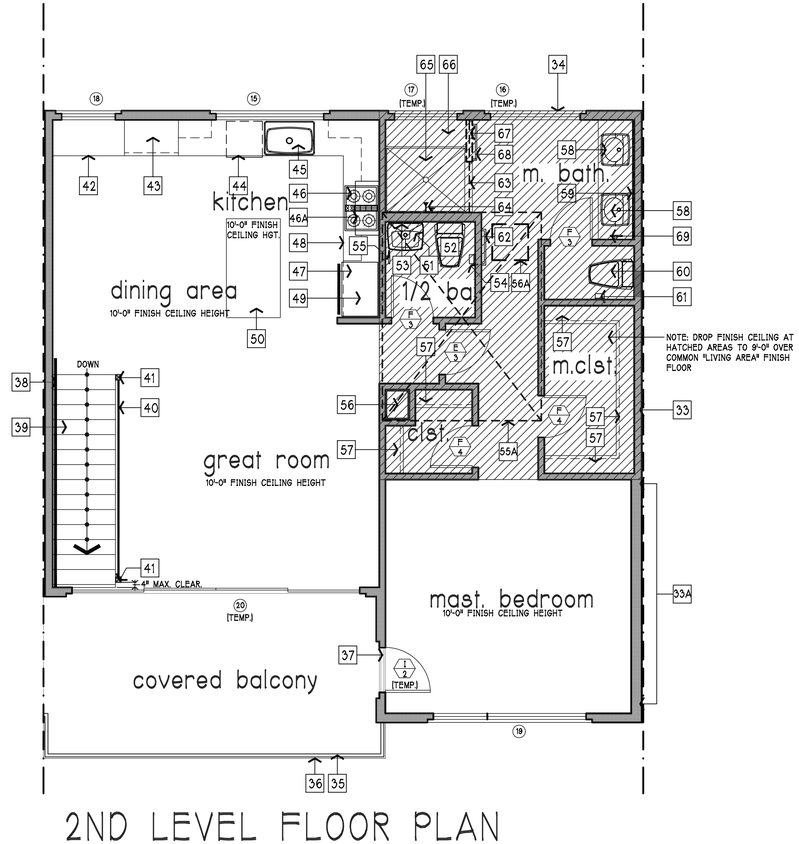

1ST LEVEL FLOOR PLAN

FLOOR PLAN KEYNOTES:

1ST FLOOR KEYNOTES:

EXTERIOR:

1 MASONRY VENEER EXTERIOR WALL FINISH (SEE EXT. ELEVATIONS)
2 GARAGE CONCRETE FLOOR NOSING
3 BRONZE ANODIZED ALUMINUM ENTRY THRESHOLD
4 5'-0" X 6'-0" CONCRETE FRONT DOOR LANDING W/ BROOM FINISH
5 11'-6" X 5'-0" CONCRETE SERVICE LANDING W/ NON-SLIP BROOM FINISH
6 2X6 STUD FRAMED EXTERIOR WALL TYPICAL UNLESS NOTED OTHERWISE
7 2X4 COMMON UNIT D.F. STUD FRAMED FIRE WALL - SEE FRAMING DETAILS
7A 2X6 COMMON UNIT D.F. STUD FRAMED FIRE WALL - SEE FRAMING DETAILS (2X4 WALL WHERE ADJACENT TO FLOOR PLAN "A" UNIT)
7B 2X4 COMMON UNIT D.F. STUD FRAMED
8 CANTILEVERED FLOOR AT 2ND LEVEL
9 WALL MOUNT POWER PANEL W/ U-FER GROUND AND MAIN POWER SWITCH
10 EXTERIOR WINDOW COMMON WALL LINE
11 WINDOW WALL SHELF LINE (CEMENT PLASTER FINISH)
12 UPPER LEVEL EXTERIOR WALL LINE
12A DRYER EXHAUST VENT / DUCT LOCATION
12B TRASH RECEPTICAL STORAGE LOCATION
12C AIR-CONDITIONER LOCATION

GARAGE:

13 WATER HEATER SET W/ SIESMIC TRAPS TOP AND BOTTOM
14 ELECTRICAL SUB-PANEL LOCATION (VERIFY AT JOB SITE)
15 BRONZE ANODIZED ALUMINUM DOOR THRESHOLD
16 4'-2" X 5'-8" CONCRETE LANDING W/ BROOM FINISH
16A 18" HIGH WATER HEATER PLATFORM W/ 26GA. G.I. CAP AND FLASHING

ENTRY & STAIRCASE:

17 STAIR HANDRAIL SET 36" ABOVE COMMON STAIR TREAD NOSING
18 STAIR ASSEMBLY TO 2ND FLOOR (10" RUN W/ 7.333" RISER)
19 RAISED STAIR CURB W/ METAL STAIR HANDRAIL ASSEMBLY
20 STAIR CASE FRAMING ABOVE

LAUNDRY CLOSET:

21 CLOTHES WASHING MACHINE LOCATION
22 CLOTHES DRYER LOCATION
22A RECESSED IN WALL LAUNDRY WATER CONNECTION BOX
22B DRYER VENT CONNECTION LOCATION

HALLWAY ENTRY CLOSET:

23 CLOSET SHELF AND POLE ASSEMBLY W/ METAL SHELF TO WALL BRACKET

BATHROOM #2:

24 BATHROOM SINK LOCATION
25 WALL MOUNT MIRROR LOCATION
26 DECK MOUNT TOILET W/ MAX. 1.28 GAL. FLUSH CAPACITY
27 WALL MOUNT TOILET PAPER DISPENSER LOCATION
28 30" X 60" ENAMEL CAST IRON TUB W/ SHOWER
29 SHOWER CURTAIN ROD LOCATION
30 WALL MOUNT SHOWER HEAD, TUB FILLER AND HANDLE ASSEMBLY LOCATION
31 WALL MOUNT TOWEL BAR LOCATION

BEDROOMS #2 & #3 CLOSETS:

32 CLOSET POLE AND SHELF ASSEMBLY W/ METAL SHELF SUPPORTING BRACKETS

2ND LEVEL FLOOR PLAN

FLOOR PLAN KEYNOTES:

2ND FLOOR KEYNOTES:

2ND FLOOR EXTERIOR:

33 2X4 COMMON UNIT D.F. STUD FRAMED FIRE WALL - SEE FRAMING DETAILS
33A 2X6 COMMON UNIT D.F. STUD FRAMED FIRE WALL - SEE FRAMING DETAILS (2X4 WALL WHERE ADJACENT TO FLOOR PLAN "A"-ADA UNIT)
34 EXTERIOR WINDOW COMMON WALL LINE
35 42" HIGH DECK RAILING SET ABOVE COMMON FINISH FLOOR W/ VERTICAL RAILS SET IN SUCH A MANNER SO AS TO PREVENT THE PASSAGE OF A 4" DIA. SPHERE.
36 DECK NOSING
37 BRONZE ANODIZED ALUMINUM DOOR THRESHOLD

STAIR CASE & LANDING:

38 WALL MOUNT STAIR HANDRAIL SET 36" ABOVE COMMON STAIR TREAD NOSING
39 STAIR CASE ASSEMBLY TO 1ST FLOOR BELOW (10" RUN W/ 7.333" RISER) (TYPICAL)
40 42" HIGH HANDRAIL W/ VERTICAL RAILS SET IN SUCH A MANNER SO AS TO PREVENT THE PASSAGE OF A 4" DIA. SPHERE
41 METAL STAIR RAILING END POST

KITCHEN & DINING ROOM:

42 30" WIDE HOME CENTER DESK W/ LOWER CABINET STORAGE
43 3'-0" LEFT TO RIGHT KITCHEN FOOD PANTRY LOCATION
44 DISHWASHER LOCATION
45 SINGLE COMPARTMENT KITCHEN SINK W/ DISPOSAL UNIT (CONTINUOUS FEED)
46 4 BURNER RANGE TOP W/ SELF-CLEANING CONVECTION OVEN BELOW
46A RANGE HOOD LOCATION W/ FAN, LIGHT AND MICRO-WAVE OVEN
47 REFRIGERATOR / FREEZER LOCATION ROUGH PLUMB FOR ICE & WATER DISPENSER
48 LOWER CABINET ASSEMBLY
49 UPPER CABINET ASSEMBLY
50 3'-0" X 5'-6" KITCHEN ISLAND

1/2 BATH:

51 PEDISTAL SINK LOCATION
52 DECK MOUNT TOILET W/ MAX. FLUSH CAPACITY OF 1.28 GALLONS
53 WALL MOUNT MIRROR
54 WALL MOUNT TOILET PAPER DISPENSER LOCATION
55 WALL MOUNT TOWEL RING LOCATION
55A HORIZONTAL ATTIC-MOUNT HVAC LOCATION (TYP.)

GREAT ROOM:

56 HVAC DUCT CHASE LOCATION - CHASE IS TO BE FRAMED AFTER MECHANICAL DUCT INSTALLATION.
56A 24" X 30" ATTIC ACCESS PANEL LOCATION

MASTER BEDROOM CLOSETS:

57 CLOSET POLE & SHELF ASSEMBLY W/ METAL SHELF BRACKETS AS REQUIRED

MASTER BATHROOM:

58 BATHROOM SINK LOCATION
59 WALL MOUNT MIRROR
60 DECK MOUNT TOILET W/ MAX. 1.28 GAL. FLUSH CAPACITY
61 WALL MOUNT TOUILET PAPER DISPENSER LOCATION
62 WALL MOUNT TOWEL BAR
63 TEMPERED GLASS SHOWER DOOR
64 WALL MOUNT SHOWER HEAD AND SHOWER VALVE ASSEMBLY
65 4'-10" X 5'-2" TILE SHOWER W/ NON-SLIP SURFACED SHOWER PAN (SIZE OF SHOWER INCLUDES SHR. BENCH)
66 18" HIGH SHOWER BENCH W/ TILE FINISH
67 60" HIGH SHOWER WALL W/ TILE CAP AND TRIM
68 WALL MOUNT TOWEL BAR LOCATION
69 WALL MOUNT TOWEL RING LOCATION

FLOOR PLAN "B" (notes & tags only)

SCALE: 1/4" = 1'-0"

1ST FLOOR LIVING AREA:	588.600 SQUARE FEET
2ND FLOOR LIVING AREA:	1,003.800 SQUARE FEET
TOTAL LIVING AREA:	1,592.400 SQUARE FEET
GARAGE AREA:	252.300 SQUARE FEET
DECK AREA:	167.500 SQUARE FEET

⚠ NOTE: LANDINGS AT THE REQUIRED EGRESS DOOR SHALL NOT BE MORE THAN 1 1/2" LOWER THAN THE TOP OF THE THRESHOLD. LANDINGS WITH DOORS THAT DO NOT SWING OVER THE LANDING OR DOORS OTHER THAN THE REQUIRED EGRESS DOOR MAY HAVE A DIFFERENCE IN ELEVATION OF 7 3/4" MAXIMUM BELOW THE TOP OF THE THRESHOLD (R311.3.1 - C.R.C.)

THESE DRAWINGS ARE THE PROPERTY OF OSITO HOLDINGS, LLC AND ARE INTENDED FOR USE SOLELY ON THE PROJECT TITLED HEREON. THESE DRAWINGS AS PROTECTED UNDER COPYRIGHT LAWS ARE NOT TO BE REPRODUCED IN WHOLE OR PART IN ANY MANNER WITHOUT THE EXPRESSED WRITTEN CONSENT OF THE DESIGNER. USE OF THESE DRAWINGS IS LIMITED TO THE SITE INTENDED AND THEIR USE AT ANY OTHER SITE, OR ON OTHER PROJECTS IS PROHIBITED EXCEPT BY PRIOR WRITTEN CONSENT OF THE DESIGNER. ALL REPRODUCTINS OF THESE DRAWINGS, IN WHOLE OR PART, REMAIN UNDER THE OWNERSHIP OF THE DESIGNER AND SHALL BE RETURNED UPON COMPLETION OF THE PROJECT OR UPON REQUEST OF THE DESIGNER.

COPYRIGHT © 2020

OWNER / DEVELOPER:

OSITO HOLDINGS, LLC
P.O. BOX 2827
MESA, AZ 85214
(480) 646.6323

PROJECT:

TENNANT SQUARE
215 TENNANT AVENUE
MORGAN HILL, CA.
COUNTY OF
SANTA CLARA

DRAWING:

FLOOR PLAN "B" (notes & tags only)

LICENSED ARCHITECT
ZUISHUANG CHEN
NO. C-28156
REN. 5/31/25
STATE OF CALIFORNIA

REVISIONS:
⚠ 03.20.2025 PLAN CHECK RESPONSE

DATE: JUNE 03, 2024
SCALE: AS NOTED
DRAWN BY: G.E.MOORE
PROJ. MGR. G.E.MOORE
PROJECT FILE: 0.20-TENNANT
DRAWING: B1-A.3

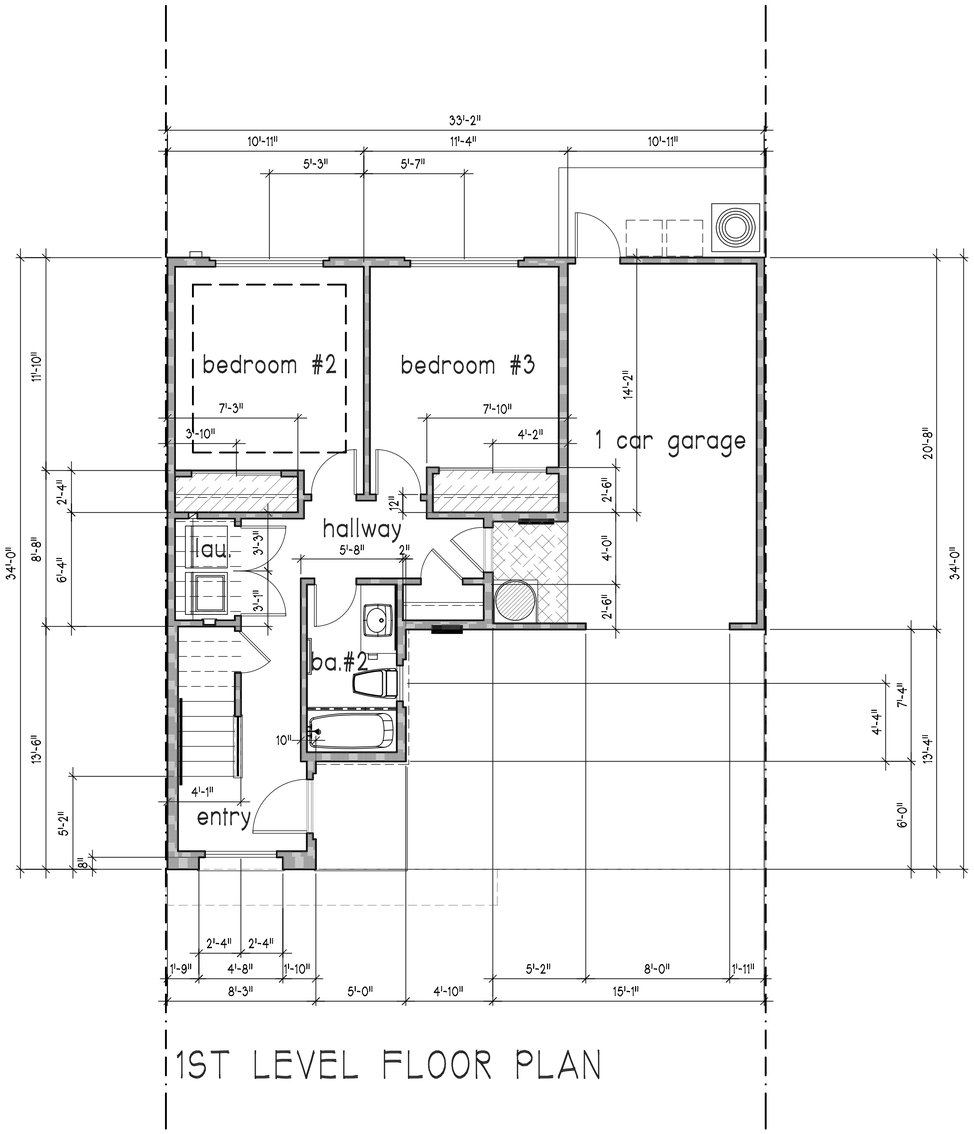

1ST LEVEL FLOOR PLAN

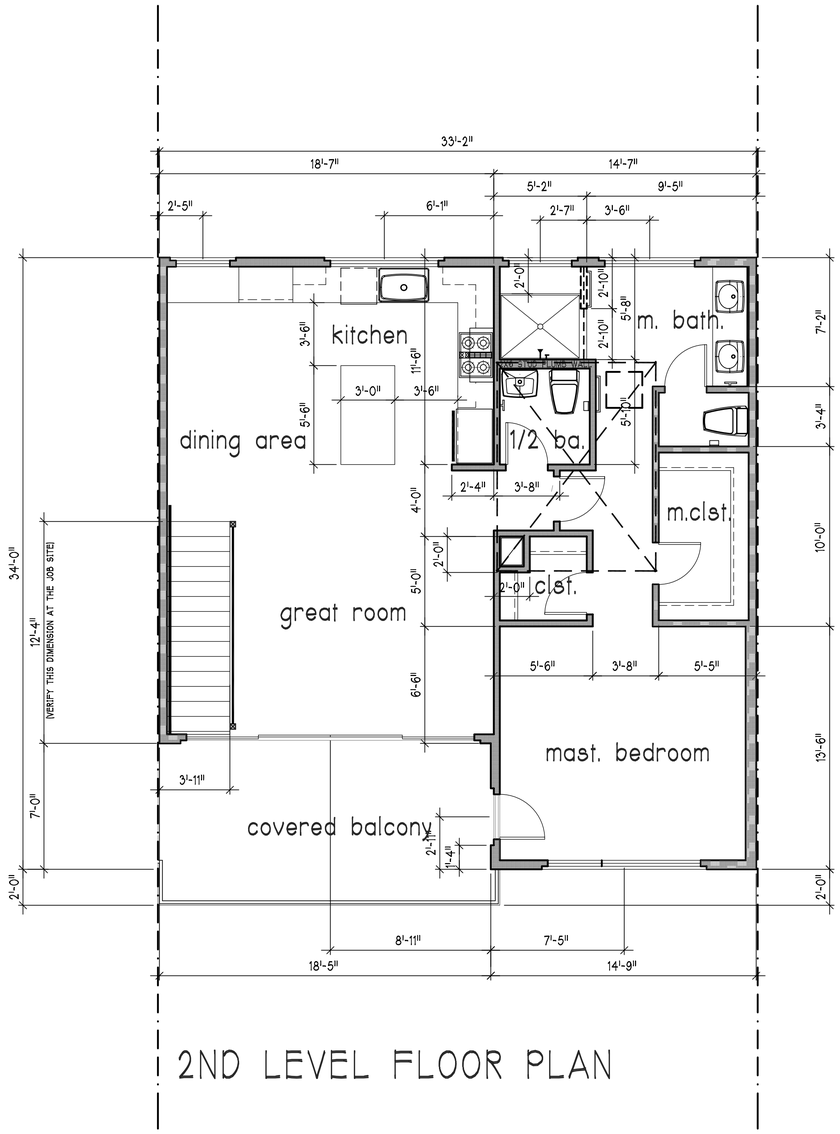

2ND LEVEL FLOOR PLAN

FLOOR PLAN "B" (dimensions only)

SCALE: 1/4" = 1'-0"

THESE DRAWINGS ARE THE PROPERTY OF OSITO HOLDINGS, LLC AND ARE INTENDED FOR USE SOLELY ON THE PROJECT TITLED HEREON. THESE DRAWINGS AS PROTECTED UNDER COPYRIGHT LAWS ARE NOT TO BE REPRODUCED IN WHOLE OR PART IN ANY MANNER WITHOUT THE EXPRESSED WRITTEN CONSENT OF THE DESIGNER. USE OF THESE DRAWINGS IS LIMITED TO THE SITE INTENDED AND THEIR USE AT ANY OTHER SITE, OR ON OTHER PROJECTS IS PROHIBITED EXCEPT BY PRIOR WRITTEN CONSENT OF THE DESIGNER. ALL REPRODUCTINS OF THESE DRAWINGS, IN WHOLE OR PART, REMAIN UNDER THE OWNERSHIP OF THE DESIGNER AND SHALL BE RETURNED UPON COMPLETION OF THE PROJECT OR UPON REQUEST OF THE DESIGNER.

COPYRIGHT © 2020

OWNER / DEVELOPER:

OSITO HOLDINGS, LLC
P.O. BOX 2827
MESA, AZ 85214
(480) 646.6323

PROJECT:

TENNANT SQUARE
215 TENNANT AVENUE
MORGAN HILL, CA.
COUNTY OF
SANTA CLARA

DRAWING:

FLOOR PLAN "B" (dimensions only)

LICENSED ARCHITECT
ZUISHUANG CHEN
NO. C-28156
REN. 5/31/25
STATE OF CALIFORNIA

REVISIONS:

DATE: JUNE 03, 2024
SCALE: AS NOTED
DRAWN BY: G.E.MOORE
PROJ. MGR. G.E.MOORE
PROJECT FILE: 0.20-TENNANT
DRAWING: B1-A31

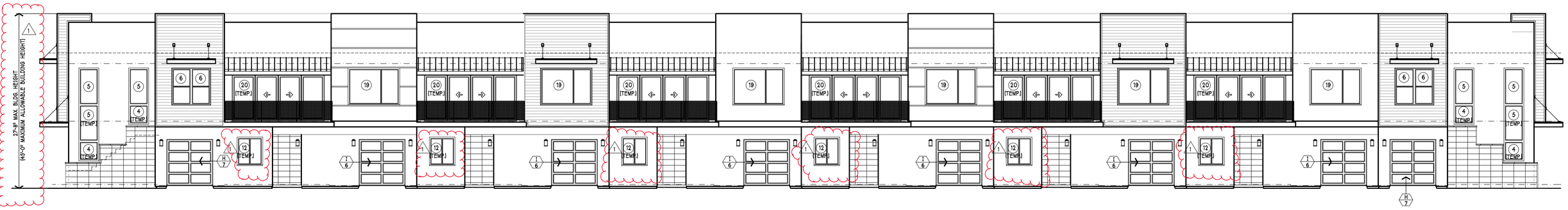

FRONT ELEVATION

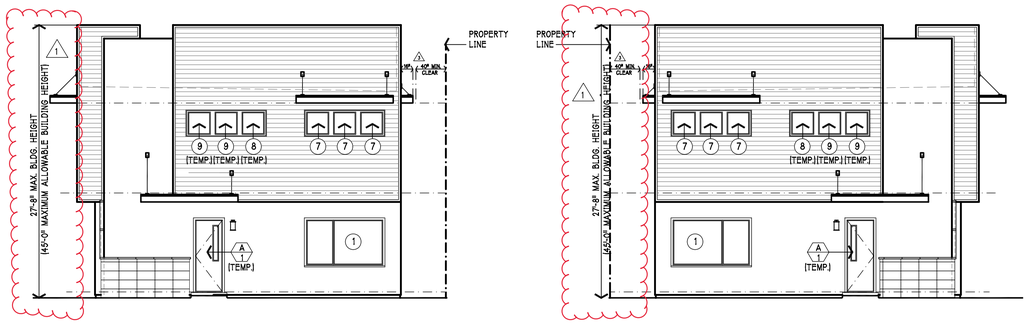

RIGHT SIDE ELEVATION

LEFT SIDE ELEVATION

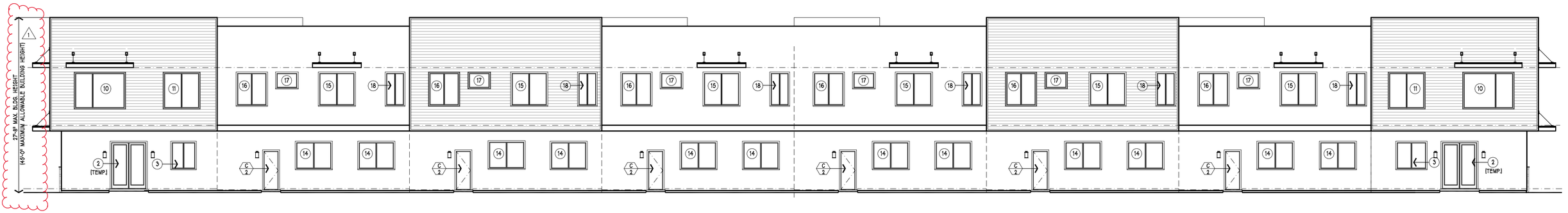

REAR ELEVATION

MASTER EXTERIOR ELEVATIONS BUILDING "1"

SCALE: 1/8" = 1'-0"

THESE DRAWINGS ARE THE PROPERTY OF OSITO HOLDINGS, LLC AND ARE INTENDED FOR USE SOLELY ON THE PROJECT TITLED HEREON. THESE DRAWINGS AS PROTECTED UNDER COPYRIGHT LAWS ARE NOT TO BE REPRODUCED IN WHOLE OR PART IN ANY MANNER WITHOUT THE EXPRESSED WRITTEN CONSENT OF THE DESIGNER. USE OF THESE DRAWINGS IS LIMITED TO THE SITE INTENDED AND THEIR USE AT ANY OTHER SITE, OR ON OTHER PROJECTS IS PROHIBITED EXCEPT BY PRIOR WRITTEN CONSENT OF THE DESIGNER. ALL REPRODUCTIONS OF THESE DRAWINGS, IN WHOLE OR PART, REMAIN UNDER THE OWNERSHIP OF THE DESIGNER AND SHALL BE RETURNED UPON COMPLETION OF THE PROJECT OR UPON REQUEST OF THE DESIGNER.

COPYRIGHT © 2020

OWNER / DEVELOPER:

OSITO HOLDINGS, LLC
P.O. BOX 2827
MESA, AZ 85214
(480) 646.6323

PROJECT:

TENNANT SQUARE
215 TENNANT AVENUE
MORGAN HILL, CA.
COUNTY OF
SANTA CLARA

DRAWING:

MASTER EXTERIOR ELEVATIONS BUILDING "1"

LICENSED ARCHITECT
ZUISHUANG CHEN
REN. 5/31/
STATE OF CALIFORNIA

REVISIONS:
1. 02.20.2023 PLAN CHECK RESPONSE
2. 10.12.2024 PLAN CHECK RESPONSE

DATE: OCTOBER 12, 2024
SCALE: AS NOTED
DRAWN BY: G.E.MOORE
PROJ. MGR. G.E.MOORE
PROJECT FILE: 0.20-TENNANT
DRAWING: B1-A4

FULL FRONT EXTERIOR ELEVATION

SCALE: 1/8" = 1'-0"

EXTERIOR FINISH MATERIALS:

1. CEMENT PLASTER: - 3 COAT CEMENT PLASTER (7/8") W/ COLOR COAT SET O/ 17GA. SELF-FURRED, G.I. STUCCO NETTING W/ DBL. LAYER OF TYPE "X" ASPHALT SATUARATED BUILDING PAPER>
2. EXTERIOR WOOD SIDING: - 1 X 8 (7 1/4" EXPOSURE) BORAL TRU EXTERIOR "SHIPLAP" HARDBOARD SIDING W/ SMOOTH SURFACE FACE AND PAINT FINISH.
3. EXTERIOR WOOD TRIM: - 1 X 3 BORAL TRU EXTERIOR HARDBOARD TRIM W/ SMOOTH SURFACE AND PAINT FINISH.
4. HORIZONTAL BELLY BAND TRIM: - BORAL TRU EXTERIOR 2 X 12 HARDBOARD TRIM W/ SMOOTH FACE AND PAINT FINISH.
5. EXPOSED ROOF: - CALIFORNIA STANDING SEAM METAL ROOF W/ STANDING SEAMS SET AT 12" O.C. - ALUMINUM W/ KYNAR PAINT FINISH.
6. MASONRY VENEER EXTERIOR: - EL DORADO STONE MANUFACTURED MASONRY VENEER "LONGITUDE 24" - SILENT GREY.
7. EXPOSED STRUCTURAL "I" BEAM W/ PAINT FINISH.
8. WINDOWS: MILGARD "TUSCANY" SERIES COLOR IS TO BE "CLASSIC BROWN".
9. RESIDENCE FRONT ENTRY DOOR: - PLASTPRO 3'-0" X 8'-0" SMOOTH SURFACE SOLID CORE W/ TEMPERED GLASS
10. CLOPAY GARAGE SECTIONAL OVERHEAD DOOR: AVANTE SERIES 8'-0" X 8'-0" 2 1/2" BRONZE ANODIZED ALUMINUM FRAME W/ FROSTED TEMPERED GLASS DOOR PANELS.
11. WINDOW CANOPY: CUSTOM MANUFACTURE AND SIZE ALUMINUM MATERIAL W/ PAINT FINISH TO MATCH TRIM.

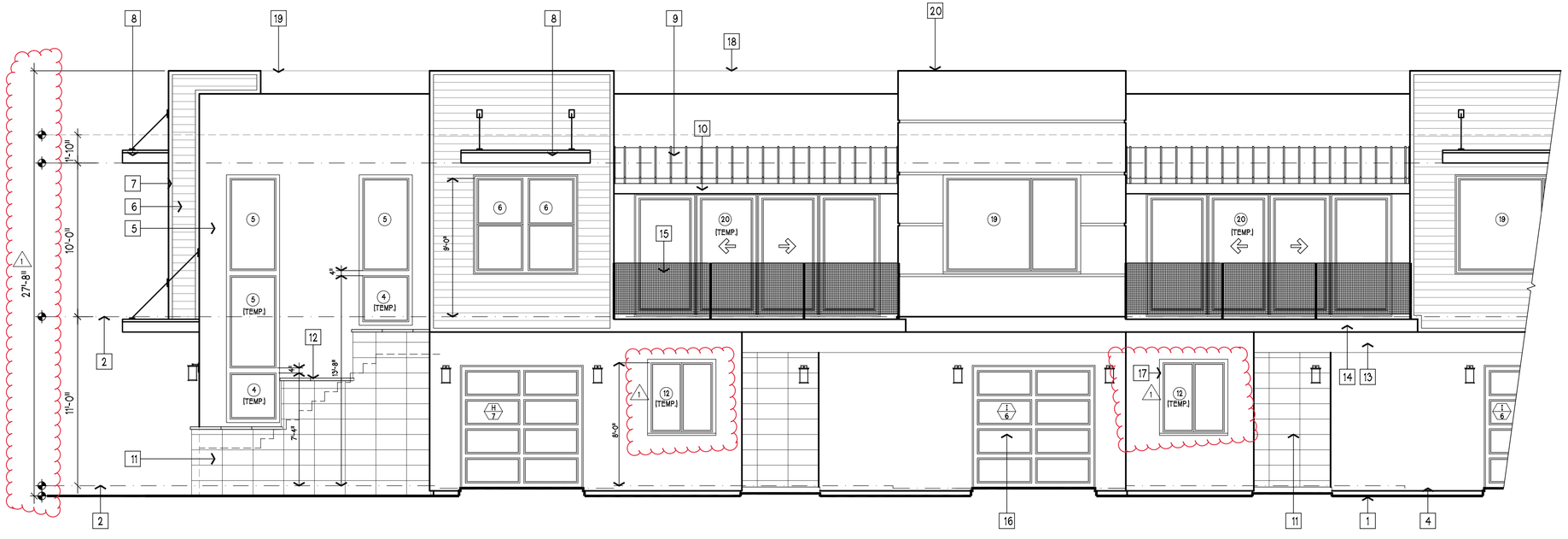

PARTIAL FRONT EXTERIOR ELEVATION

SCALE: 1/4" = 1'-0"

EXTERIOR KEYNOTES:

1	EXPECTED FINISH GRADE LINE (SEE CIVIL ENGINEERS DOCUMENTS)
2	LIVING AREA 1ST LEVEL FINISH FLOOR LINE
3	LIVING ARE 2ND LEVEL FINISH FLOOR LINE
4	GARAGE FINISH FLOOR LINE
5	DRI-VIT EXTERIOR PLASTER WALL COATING W/ SMOOTH TROWEL FINISH * (INTRIGAL COLOR)
6	HORIZONTAL SHIP LAP WOOD EXTERIOR WALL FINISH (CEDAR)
7	1X3 S4S CEDAR HORIZONTAL AND VERTICAL TRIM W/ CLEAR FINISH
8	PRE-FABRICATED METAL WINDOW AWNING W/ POWDER COAT FINISH
9	STANDING SEAM METAL RIBBED ALUMINUM ROOF W/ POWDER COAT FINISH (SEE COLOR BOARD)
10	EXPOSED S4S D.F. ROOF BEAM W/ SEMI-TRANSPARENT STAIN FINISH
11	EL DORADO MANUFACTURED STONE EXTERIOR WALL VENEER (SEE COLOR BOARD FOR PATTERN AND COLOR)
12	EL DORADO STONE MASONRY WALL CAP AND TRIM
13	EXPOSED ENGINEERED BEAM W/ CEMENT PLASTER FINISH
14	2X S4S D.F. HORIZONTAL BAND TRIM W/ COLOR COAT DRI-VIT FINISH
15	HORIZONTAL WIRED AND TURNBUCKLE DECK RAILING W/ HORIZONTAL UNITS SPACED IN SUCH A MANNER SO AS TO PREVENT THE PASSAGE OF A 4" DIA. SPHERE (TYPICAL)
16	SECTIONAL OVERHEAD GARAGE DOOR W/ FROSTED TRANSLUCENT NATURAL LIGHT PENITRATING DOOR PANELS
17	2" WALL RECESS AT ALL WINDOW AND DOORS (TYPICAL)
18	ROOF PARAPET WALL LINE BEYOND (REAR ELEVATION)
19	EXPECTED FINISH ROOF LINE BEYOND
20	1" HORIZONTAL G.I. STUCCO SCREED W/ BRUSHED FINISH

*NOTE:
EVERY OTHER UNIT EXTERIOR DRI-VIT SYSTEM FINISH IS TO HAVE A SMOOTH "PEBBLE" FINISH TO INCLUDE COLOR COAT.

THESE DRAWINGS ARE THE PROPERTY OF OSITO HOLDINGS, LLC AND ARE INTENDED FOR USE SOLELY ON THE PROJECT TITLED HEREON. THESE DRAWINGS AS PROTECTED UNDER COPYRIGHT LAWS ARE NOT TO BE REPRODUCED IN WHOLE OR PART IN ANY MANNER WITHOUT THE EXPRESSED WRITTEN CONSENT OF THE DESIGNER. USE OF THESE DRAWINGS IS LIMITED TO THE SITE INTENDED AND THEIR USE AT ANY OTHER SITE, OR ON OTHER PROJECTS IS PROHIBITED EXCEPT BY PRIOR WRITTEN CONSENT OF THE DESIGNER. ALL REPRODUCTIONS OF THESE DRAWINGS, IN WHOLE OR PART, REMAIN UNDER THE OWNERSHIP OF THE DESIGNER AND SHALL BE RETURNED UPON COMPLETION OF THE PROJECT OR UPON REQUEST OF THE DESIGNER.

COPYRIGHT © 2020

OWNER / DEVELOPER:

OSITO HOLDINGS, LLC
P.O. BOX 2827
MESA, AZ 85214
(480) 646.6323

PROJECT:

TENNANT SQUARE
215 TENNANT AVENUE
MORGAN HILL, CA.
COUNTY OF
SANTA CLARA

DRAWING:

FRONT EXTERIOR ELEVATION
BUILDING "1"

LICENSED ARCHITECT
ZUISHUANG CHEN
NO. C-28156
REN. 5/31/25
STATE OF CALIFORNIA

REVISIONS:
1 02.20.2013 PLAN CHECK RESPONSE

DATE: JUNE 03, 2024
SCALE: AS NOTED
DRAWN BY: G.E.MOORE
PROJ. MGR. G.E.MOORE
PROJECT FILE: 0.20-TENNANT
DRAWING: B1-A41

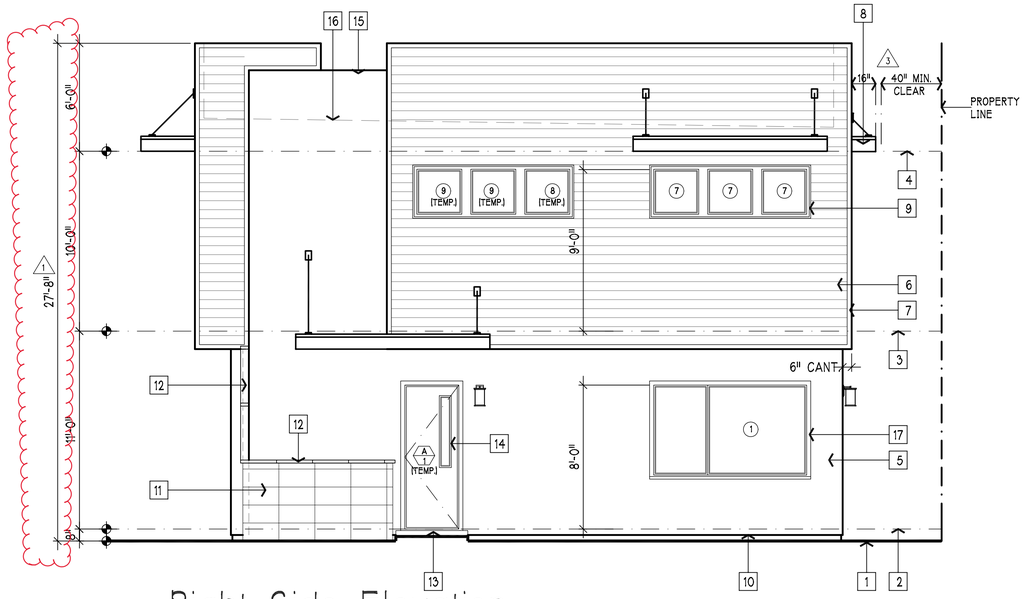

Right Side Elevation

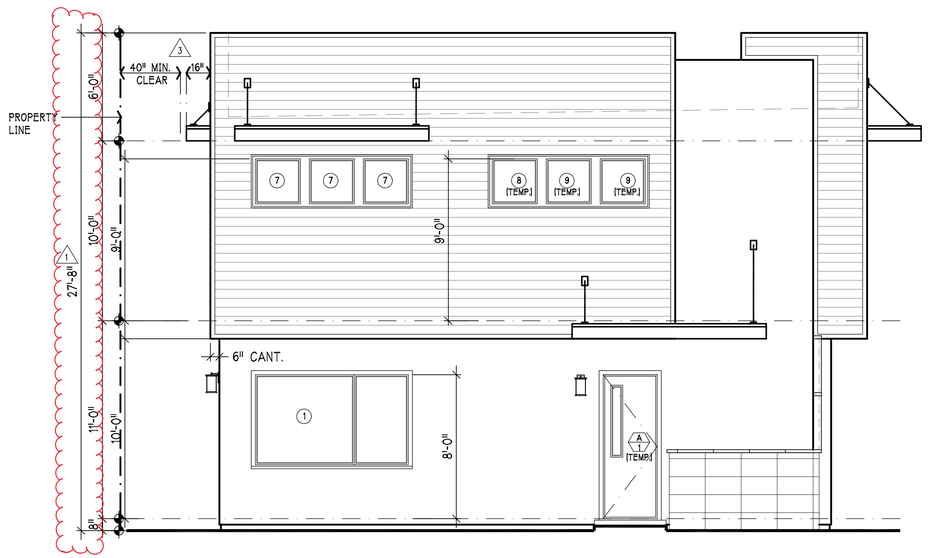

Left Side Elevation

SIDE / END EXTERIOR ELEVATIONS

SCALE: 1/4" = 1'-0"

EXTERIOR KEYNOTES:

1	EXPECTED FINISH GRADE LINE (SEE CIVIL ENGINEERS DOCUMENTS)
2	LIVING AREA 1ST LEVEL FINISH FLOOR LINE
3	LIVING AREA 2ND LEVEL FINISH FLOOR LINE
4	2ND LEVEL FINISH CEILING LINE
5	DRI-VIT EXTERIOR PLASTER WALL COATING W/ SMOOTH TROWEL FINISH * (INTRIGAL COLOR)
6	HORIZONTAL SHIP LAP WOOD EXTERIOR WALL FINISH (CEDAR)
7	1X3 S4S CEDAR HORIZONTAL AND VERTICAL TRIM W/ CLEAR FINISH
8	PRE-FABRICATED METAL WINDOW AWNING W/ POWDER COAT FINISH
9	MULTI-PIECE 1X S4S CEDAR RECESSED WINDOW HORIZONTAL AND VERTICAL TRIM W/ STAIN FINISH
10	G.I. DRI-VIT DRIP SCREED SET A MIN. OF 4" ABOVE COMMON FINISH GRADE
11	EL DORADO MANUFACTURED STONE EXTERIOR WALL VENEER (SEE COLOR BOARD FOR PATTERN AND COLOR)
12	EL DORADO STONE MASONRY WALL CAP AND TRIM
13	CONCRETE LANDING / PORCH W/ NON-SLIP BROOM FINISH
14	TYPICAL 3'-0" X 8'-0" FRONT ENTRY DOOR W/ TEMPERED GLASS WINDOW
15	COMMON ROOF PARAPET WALL
16	FINISH ROOF AND PARAPET WALL LINE BEYOND
17	2" WALL RECESS AT ALL WINDOW AND DOORS [TYPICAL]
18	FRONT ENTRY DOOR TRANSOM WINDOW [TYPICAL]

*NOTE:
EVERY OTHER UNIT EXTERIOR DRI-VIT SYSTEM FINISH IS TO HAVE A SMOOTH "PEBBLE" FINISH TO INCLUDE COLOR COAT.

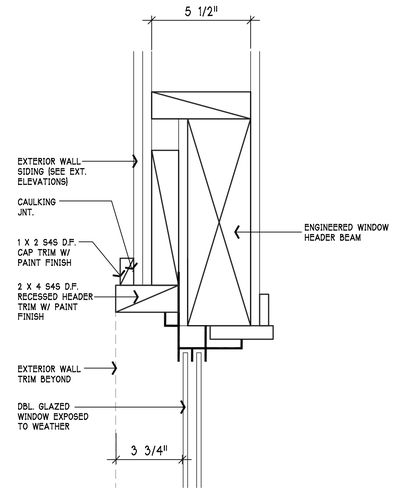

1. WINDOW HEADER DETAIL

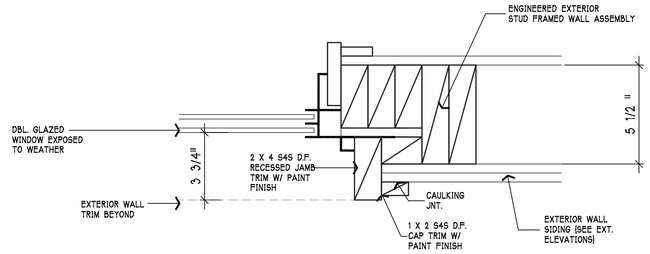

2. WINDOW JAMB DETAIL

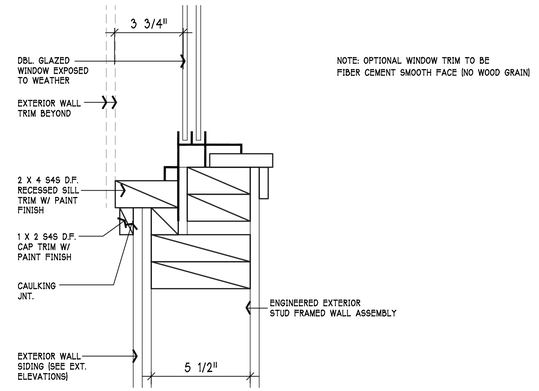

3. WINDOW SILL DETAIL

WINDOW FRAMING DETAILS

SCALE: 3" = 1'-0"

THESE DRAWINGS ARE THE PROPERTY OF OSITO HOLDINGS, LLC AND ARE INTENDED FOR USE SOLELY ON THE PROJECT TITLED HEREON. THESE DRAWINGS AS PROTECTED UNDER COPYRIGHT LAWS ARE NOT TO BE REPRODUCED IN WHOLE OR PART IN ANY MANNER WITHOUT THE EXPRESSED WRITTEN CONSENT OF THE DESIGNER. USE OF THESE DRAWINGS IS LIMITED TO THE SITE INTENDED AND THEIR USE AT ANY OTHER SITE, OR ON OTHER PROJECTS IS PROHIBITED EXCEPT BY PRIOR WRITTEN CONSENT OF THE DESIGNER. ALL REPRODUCTIONS OF THESE DRAWINGS, IN WHOLE OR PART, REMAIN UNDER THE OWNERSHIP OF THE DESIGNER AND SHALL BE RETURNED UPON COMPLETION OF THE PROJECT OR UPON REQUEST OF THE DESIGNER.

COPYRIGHT © 2020

OWNER / DEVELOPER:

OSITO HOLDINGS, LLC
P.O. BOX 2827
MESA, AZ 85214
(480) 646.6323

PROJECT:

TENNANT SQUARE
215 TENNANT AVENUE
MORGAN HILL, CA.
COUNTY OF
SANTA CLARA

DRAWING:

SIDE / END EXTERIOR ELEVATIONS BUILDING "1"

LICENSED ARCHITECT ZUISHUANG CHEN C-31708 REN. 5/31/24 STATE OF CALIFORNIA

REVISIONS:
1 02.20.2023 PLAN CHECK RESPONSE
2 10.12.2024 PLAN CHECK RESPONSE

DATE: OCTOBER 12, 2024
SCALE: AS NOTED
DRAWN BY: G.E.MOORE
PROJ. MGR. G.E.MOORE
PROJECT FILE: 0.20-TENNANT
DRAWING: B1-A42

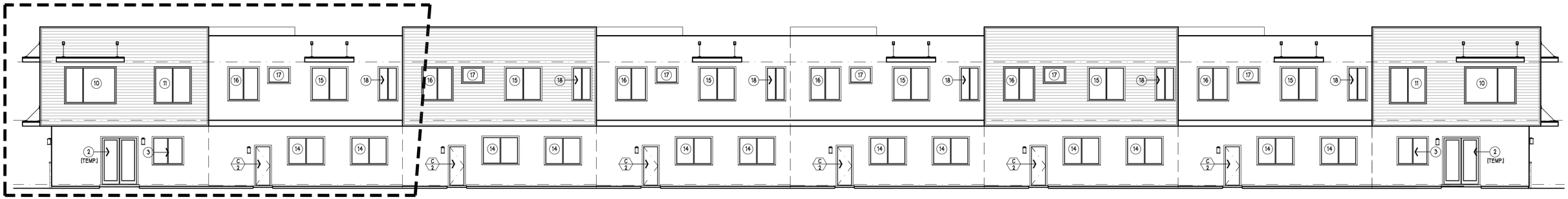

Rear Exterior Elevation

SCALE: 1/8" = 1'-0"

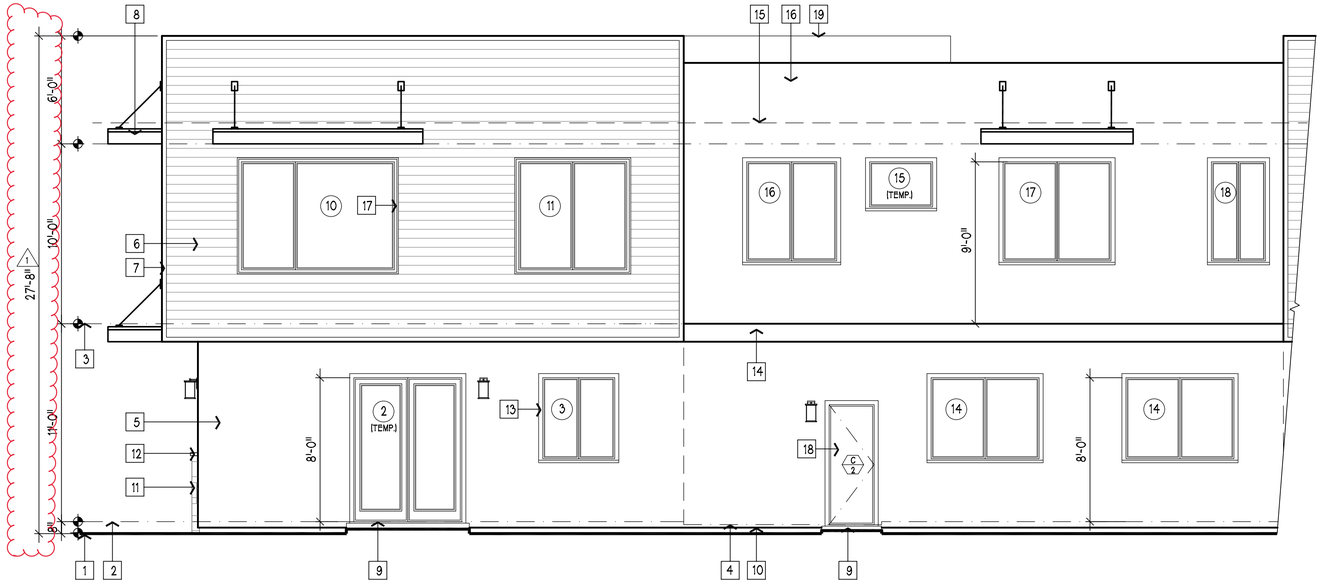

PARTIAL REAR EXTERIOR ELEVATION

SCALE: 1/4" = 1'-0"

EXTERIOR KEYNOTES:

1	EXPECTED FINISH GRADE LINE [SEE CIVIL ENGINEERS DOCUMENTS]
2	LIVING AREA 1ST LEVEL FINISH FLOOR LINE
3	LIVING ARE 2ND LEVEL FINISH FLOOR LINE
4	GARAGE FINISH FLOOR LINE
5	DRI-VIT EXTERIOR PLASTER WALL COATING W/ SMOOTH TROWEL FINISH * [INTRIGAL COLOR]
6	HORIZONTAL SHIP LAP WOOD EXTERIOR WALL FINISH [CEDAR]
7	1X3 S4S CEDAR HORIZONTAL AND VERTICAL TRIM W/ CLEAR FINISH
8	PRE-FABRICATED METAL WINDOW AWNING W/ POWDER COAT FINISH
9	CONCRETE STOOP / LANDING W/ BROOM NON-SLIP FINISH SURFACE
10	G.I. DRI-VIT DRIP SCREED SET A MIN. OF 4" ABOVE COMMON FINISH GRADE
11	EL DORADO MANUFACTURED STONE EXTERIOR WALL VENEER [SEE COLOR BOARD FOR PATTERN AND COLOR]
12	EL DORADO STONE MASONRY WALL CAP AND TRIM
13	2" WALL RECESS AT ALL WINDOW AND DOORS [TYPICAL]
14	2X S4S D.F. HORIZONTAL BAND TRIM W/ COLOR COAT DRI-VIT FINISH
15	ROOF LINE BEYOND
16	PARAPET WALL W/ DRI-VIT SURFACE FINISH
17	2 PIECE S4S CEDAR RECESSED WINDOW TRIM [TYPICAL]
18	GARAGE ACCESS MAN DOOR W/ PAINT FINISH
19	PARAPET WALL LINE BEYOND

*NOTE:
EVERY OTHER UNIT EXTERIOR DRI-VIT SYSTEM FINISH IS TO HAVE A SMOOTH "PEBBLE" FINISH TO INCLUDE COLOR COAT.

THESE DRAWINGS ARE THE PROPERTY OF OSITO HOLDINGS, LLC AND ARE INTENDED FOR USE SOLELY ON THE PROJECT TITLED HEREON. THESE DRAWINGS AS PROTECTED UNDER COPYRIGHT LAWS ARE NOT TO BE REPRODUCED IN WHOLE OR PART IN ANY MANNER WITHOUT THE EXPRESSED WRITTEN CONSENT OF THE DESIGNER. USE OF THESE DRAWINGS IS LIMITED TO THE SITE INTENDED AND THEIR USE AT ANY OTHER SITE, OR ON OTHER PROJECTS IS PROHIBITED EXCEPT BY PRIOR WRITTEN CONSENT OF THE DESIGNER. ALL REPRODUCTINS OF THESE DRAWINGS, IN WHOLE OR PART, REMAIN UNDER THE OWNERSHIP OF THE DESIGNER AND SHALL BE RETURNED UPON COMPLETION OF THE PROJECT OR UPON REQUEST OF THE DESIGNER.

COPYRIGHT © 2020

OWNER / DEVELOPER:

OSITO HOLDINGS, LLC
P.O. BOX 2827
MESA, AZ 85214
(480) 646.6323

PROJECT:

TENNANT SQUARE
215 TENNANT AVENUE
MORGAN HILL, CA.
COUNTY OF
SANTA CLARA

DRAWING:

REAR EXTERIOR ELEVATION BUILDING "1"

LICENSED ARCHITECT
ZUISHUANG CHEN
NO. C-28156
REN. 5/31/25
STATE OF CALIFORNIA

REVISIONS:
1 02.20.2025 PLAN CHECK RESPONSE

DATE: JUNE 03, 2024
SCALE: AS NOTED
DRAWN BY: G.E.MOORE
PROJ. MGR. G.E.MOORE
PROJECT FILE: 0.20-TENNANT
DRAWING: B1-A43

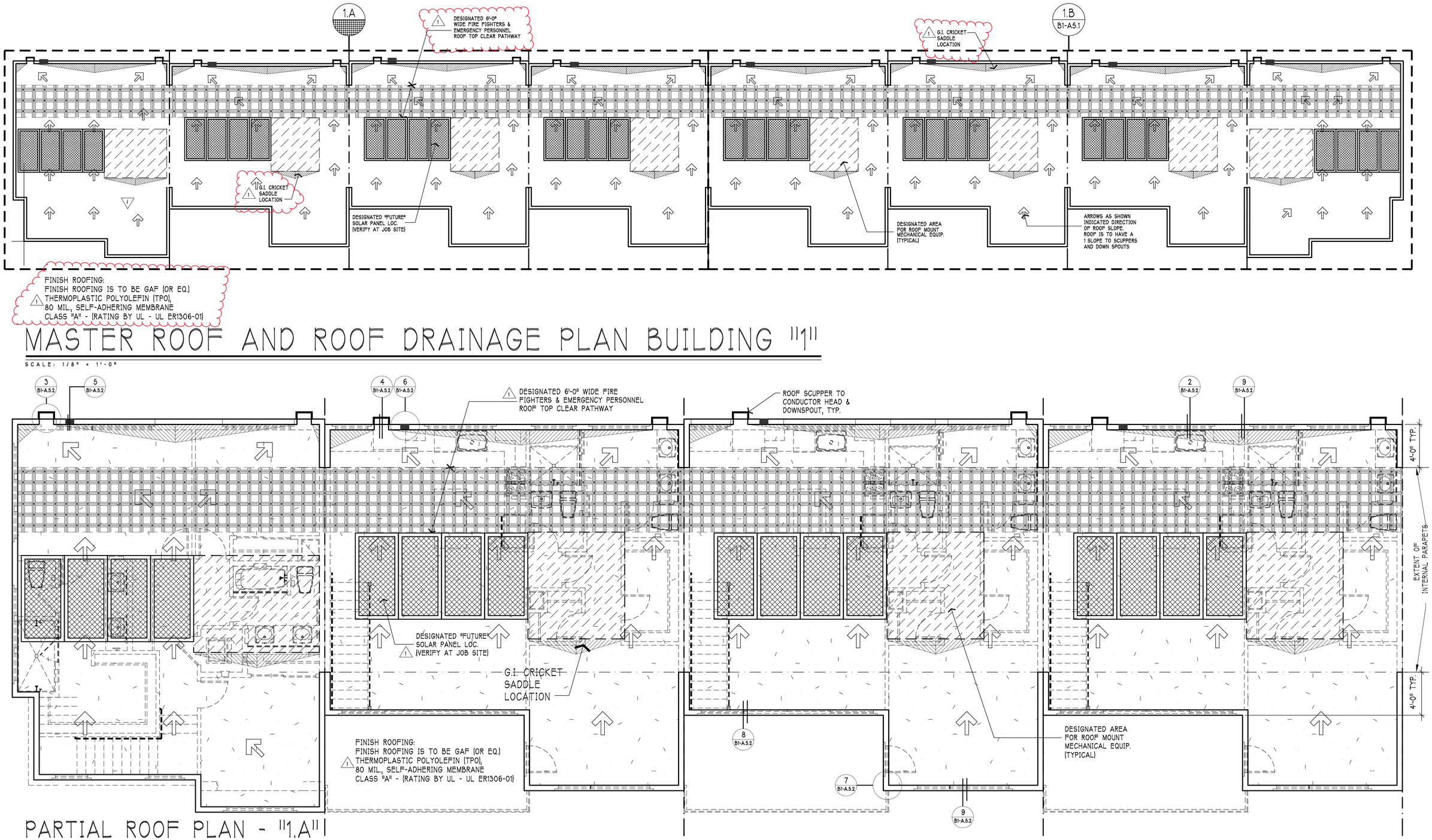

MASTER ROOF AND ROOF DRAINAGE PLAN BUILDING "1"

SCALE: 1/8" = 1'-0"

PARTIAL ROOF PLAN - "1.A"

THESE DRAWINGS ARE THE PROPERTY OF OSITO HOLDINGS, LLC AND ARE INTENDED FOR USE SOLELY ON THE PROJECT TITLED HEREON. THESE DRAWINGS AS PROTECTED UNDER COPYRIGHT LAWS ARE NOT TO BE REPRODUCED IN WHOLE OR PART IN ANY MANNER WITHOUT THE EXPRESSED WRITTEN CONSENT OF THE DESIGNER. USE OF THESE DRAWINGS IS LIMITED TO THE SITE INTENDED AND THEIR USE AT ANY OTHER SITE, OR ON OTHER PROJECTS IS PROHIBITED EXCEPT BY PRIOR WRITTEN CONSENT OF THE DESIGNER. ALL REPRODUCTINS OF THESE DRAWINGS, IN WHOLE OR PART, REMAIN UNDER THE OWNERSHIP OF THE DESIGNER AND SHALL BE RETURNED UPON COMPLETION OF THE PROJECT OR UPON REQUEST OF THE DESIGNER.

COPYRIGHT © 2020

OWNER / DEVELOPER:

OSITO HOLDINGS, LLC
P.O. BOX 2827
MESA, AZ 85214
(480) 646.6323

PROJECT:

TENNANT SQUARE
215 TENNANT AVENUE
MORGAN HILL, CA.
COUNTY OF
SANTA CLARA

DRAWING:

MASTER ROOF AND ROOF DRAINAGE PLAN
BUILDING "1", PARTIAL ROOF PLAN "1.A"
AND MISC. NOTES.

LICENSED ARCHITECT
ZUISHUANG CHEN
NO. C-28156
REN. 5/31/25
STATE OF CALIFORNIA

REVISIONS:
1 03.20.2025 PLAN CHECK RESPONSE

DATE: JUNE 03, 2024
SCALE: AS NOTED
DRAWN BY: G.E.MOORE
PROJ. MGR. G.E.MOORE
PROJECT FILE: 0.20-TENNANT
DRAWING: B1-A5

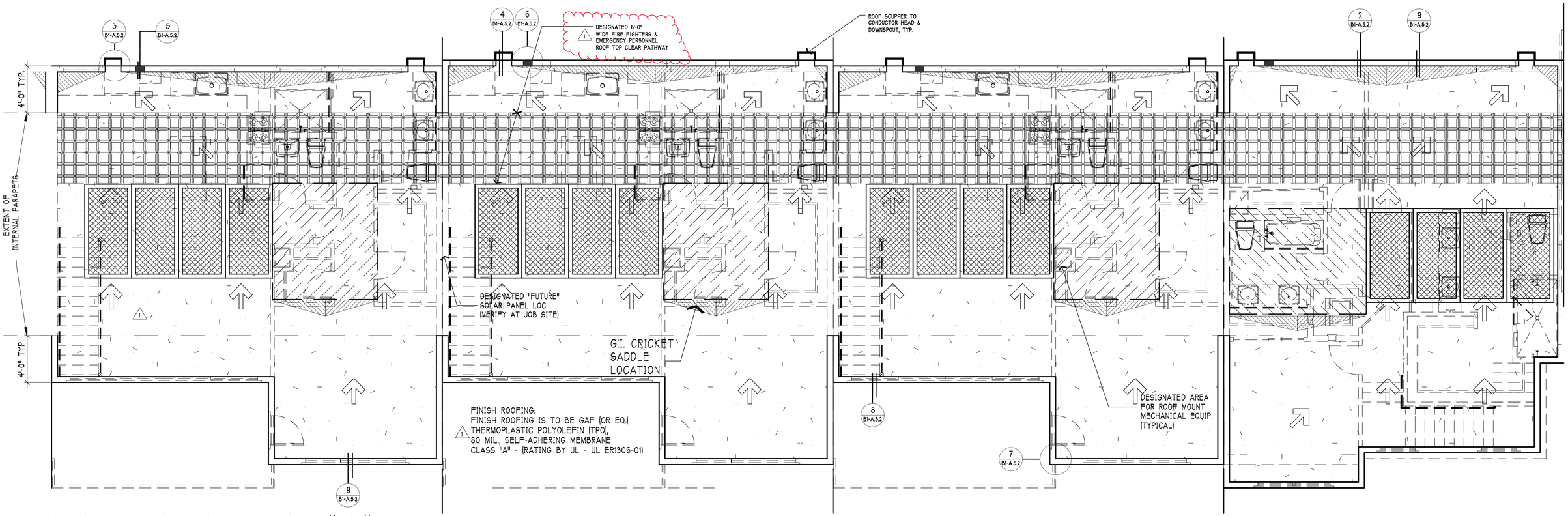

PARTIAL ROOF PLAN - "1.B"

THESE DRAWINGS ARE THE PROPERTY OF OSITO HOLDINGS, LLC AND ARE INTENDED FOR USE SOLELY ON THE PROJECT TITLED HEREON. THESE DRAWINGS AS PROTECTED UNDER COPYRIGHT LAWS ARE NOT TO BE REPRODUCED IN WHOLE OR PART IN ANY MANNER WITHOUT THE EXPRESSED WRITTEN CONSENT OF THE DESIGNER. USE OF THESE DRAWINGS IS LIMITED TO THE SITE INTENDED AND THEIR USE AT ANY OTHER SITE, OR ON OTHER PROJECTS IS PROHIBITED EXCEPT BY PRIOR WRITTEN CONSENT OF THE DESIGNER. ALL REPRODUCTINS OF THESE DRAWINGS, IN WHOLE OR PART, REMAIN UNDER THE OWNERSHIP OF THE DESIGNER AND SHALL BE RETURNED UPON COMPLETION OF THE PROJECT OR UPON REQUEST OF THE DESIGNER.

COPYRIGHT © 2020

OWNER / DEVELOPER:

OSITO HOLDINGS, LLC
P.O. BOX 2827
MESA, AZ 85214
(480) 646.6323

PROJECT:

TENNANT SQUARE
215 TENNANT AVENUE
MORGAN HILL, CA.
COUNTY OF
SANTA CLARA

DRAWING:

PARTIAL BUILDING "1" ROOF AND ROOF DRAINAGE PLAN "1.B"

LICENSED ARCHITECT
ZUISHUANG CHEN
NO. C-28156
REN. 5/31/25
STATE OF CALIFORNIA

REVISIONS:
1 02.20.2023 PLAN CHECK

DATE: JUNE 03, 2024
SCALE: AS NOTED
DRAWN BY: G.E.MOORE
PROJ. MGR. G.E.MOORE
PROJECT FILE: 0.20-TENNANT
DRAWING: B1-A5.1

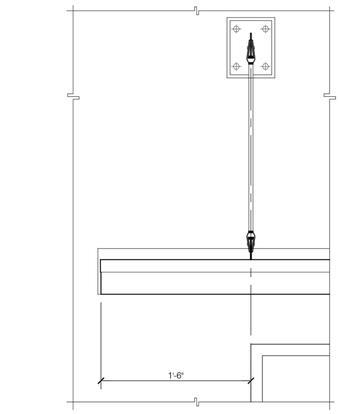

NOT TO SCALE

10. METAL WINDOW CANOPY FRAMING DETAIL

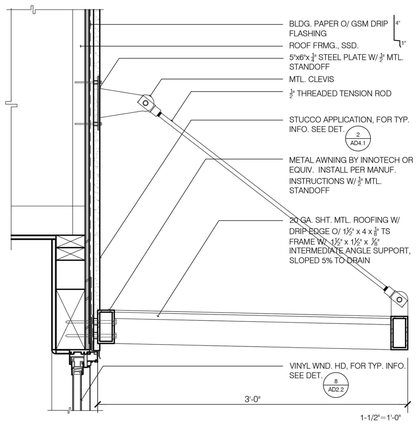

NOT TO SCALE

11. DETAIL NOT USED

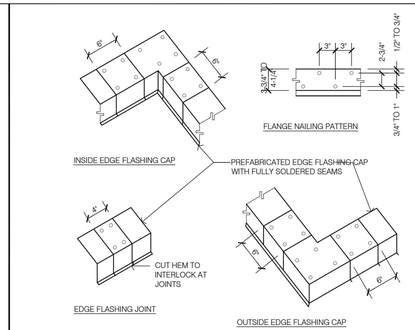

NOTES:
ROOF CEMENT SHALL BE INSTALLED BETWEEN THE ENDS AT ALL JOINTS, SIX INCHES EACH SIDE OF JOINT. EACH JOINT SHALL BE NAILED WITH A MINIMUM OF FOUR NAILS, TWO ON SIDE OF THE JOINT. ALL JOINTS AND MITERS SHALL BE OVERLAPPED A MINIMUM OF FOUR INCHES.

NOT TO SCALE

7. PARAPET WALL CORNER DETAILS

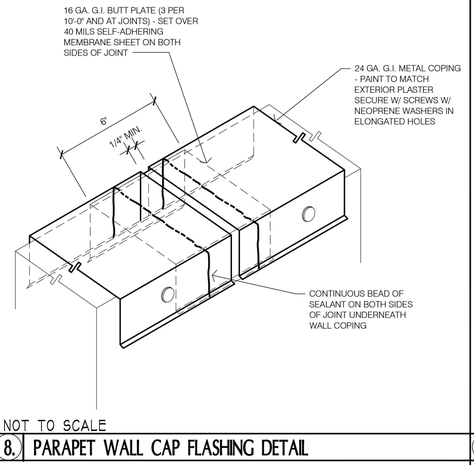

NOT TO SCALE

8. PARAPET WALL CAP FLASHING DETAIL

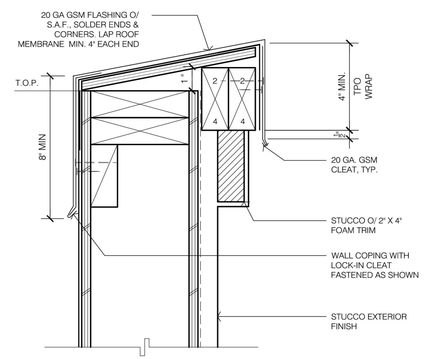

NOT TO SCALE

9. PARAPET FLASHING CAP DETAIL AT STUCCO

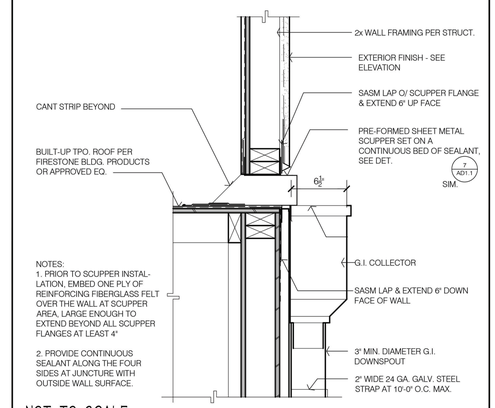

NOT TO SCALE

4. ROOF SCUPPER - SECTION

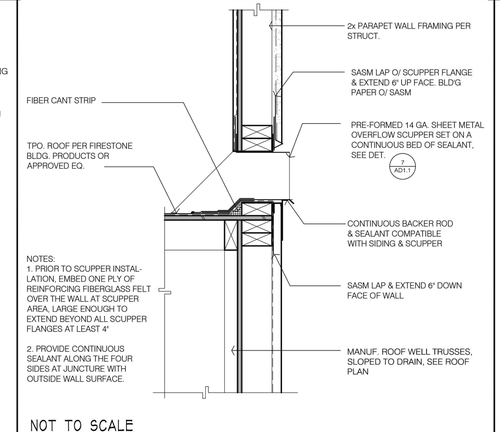

NOT TO SCALE

5. ROOF OVERFLOW SUPPER - SECTION

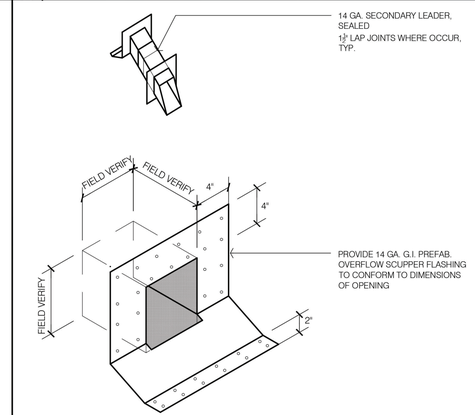

NOT TO SCALE

6. ROOF SCUPPER & OVERFLOW DETAIL

1. GENERAL ROOFING NOTES:

ROOF PLAN NOTES - SEE OWNER SPECIFICATIONS FOR FURTHER INFORMATION

1 A. SINGLE PLY THERMOPLASTIC (TPO) MEMBRANE ROOF, INTEGRATED MANUFACTURER ACCESSORIES, INCLUDING BUT NOT LIMITED TO VENTING BOOTS, CORNER REINFORCEMENT, SCUPPER, ETC.. COLOR TO BE WHITE. PROVIDE ENHANCED WALKING SURFACE PER PLAN.

1 B. FLAT ROOF SLOPES TO BE 3/8"/FT. MIN.. MAIN ROOF SLOPE PROVIDED BY ROOF FRAMING AND TRUSSES. CRICKETS AND SLOPES REQUIRED FOR DRAINAGE BY PLAN SHALL BE PROVIDED BY CONTRACTOR AND PER MANUFACTURERS RECOMMENDATIONS. INSULATION BOARD NOT REQUIRED AS INSULATION PROVIDED BELOW AT CEILING.

2. ALL DRAINAGE IS PROVIDED SCUPPERS AND ADJACENT OVERFLOW SCUPPERS WITH LEADERS AND DOWNSPOUTS. SEE PLANS AND DETAILS FOR LOCATION AND DESIGN. SEE PLUMBING PLANS FOR DRAINAGE CALCULATIONS

3. PROVIDE 26 GA. GSM. FLASHING AT ALL REQUIRED AREAS PER INDUSTRY STANDARDS (ROOF TO WALL INTERSECTIONS, ETC.) FLASHING AND COUNTERFLASHING SHALL BE INSTALLED PER MANUFACTURERS INSTRUCTIONS.

4. DOWNSPOUTS SHALL BE MIN. 3" Ø ROUND CONNECTED TO A PERIMETER DRAINAGE SYSTEM, SEE SOILS REPORT AND CIVIL DRAWINGS FOR ADDITIONAL INFORMATION. SEE PLUMBING PLANS FOR SIZING.

8. ALL PLUMBING AND MECHANICAL VENTS SHALL BE COMBINED INTO A MINIMUM AMOUNT IN ORDER TO REDUCE ROOF PENETRATIONS. BEFORE INSTALLATION OF VENTS AT ROOF, MEET WITH OWNER AND ARCHITECT TO VERIFY LOCATIONS.

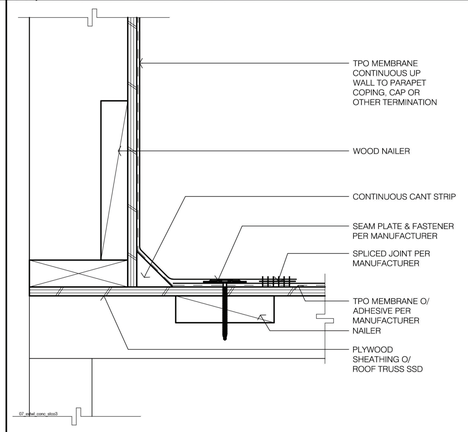

NOT TO SCALE

2. TPO BASE FLASHING AND CONTINUOUS AT PARAPET WALL

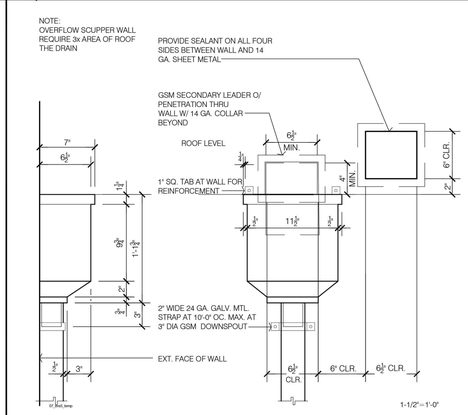

NOT TO SCALE

3. ROOF SCUPPER & OVERFLOW - ELEV. @ SCUPPER ABOVE

THESE DRAWINGS ARE THE PROPERTY OF OSITO HOLDINGS, LLC AND ARE INTENDED FOR USE SOLELY ON THE PROJECT TITLED HEREON. THESE DRAWINGS AS PROTECTED UNDER COPYRIGHT LAWS ARE NOT TO BE REPRODUCED IN WHOLE OR PART IN ANY MANNER WITHOUT THE EXPRESSED WRITTEN CONSENT OF THE DESIGNER. USE OF THESE DRAWINGS IS LIMITED TO THE SITE INTENDED AND THEIR USE AT ANY OTHER SITE, OR ON OTHER PROJECTS IS PROHIBITED EXCEPT BY PRIOR WRITTEN CONSENT OF THE DESIGNER. ALL REPRODUCTINS OF THESE DRAWINGS, IN WHOLE OR PART, REMAIN UNDER THE OWNERSHIP OF THE DESIGNER AND SHALL BE RETURNED UPON COMPLETION OF THE PROJECT OR UPON REQUEST OF THE DESIGNER.

COPYRIGHT © 2020

OWNER / DEVELOPER:

OSITO HOLDINGS, LLC
P.O. BOX 2827
MESA, AZ 85214
(480) 646.6323

PROJECT:

TENNANT SQUARE
215 TENNANT AVENUE
MORGAN HILL, CA.
COUNTY OF
SANTA CLARA

DRAWING:

ROOF FRAMING DETAILS AND NOTES

LICENSED ARCHITECT
ZUISHUANG CHEN
NO. C-28156
REN. 5/31/25
STATE OF CALIFORNIA

REVISIONS:
1 02.20.2023 PLAN CHECK RESPONSE
2 11.28.2023 PLAN CHECK RESPONSE

DATE: JUNE 24, 2023
SCALE: AS NOTED
DRAWN BY: G.E.MOORE
PROJ. MGR. G.E.MOORE
PROJECT FILE: 0.20-TENNANT
DRAWING: B1-52

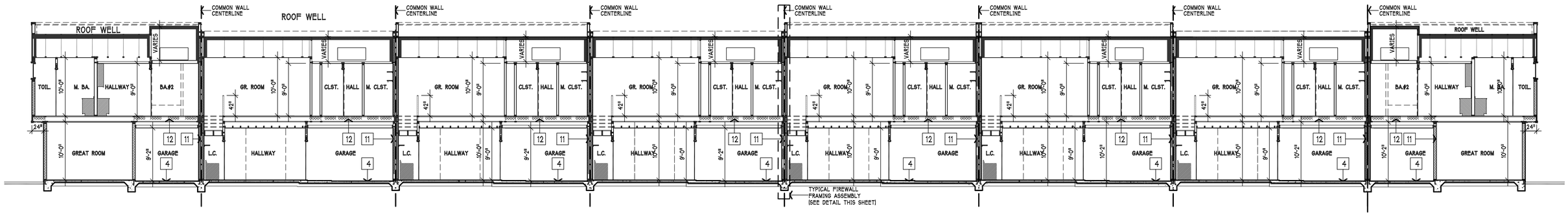

MASTER CROSS-SECTION "1" - BUILDING "1"

NOTE: ALL WORKING DRAWING CROSS-SECTIONAL ELEVATIONS ARE DIAGRAMTIC ONLY. FOR FRAMING METHODS, BEAM AND JOIST SIZING SEE STRUCTURAL DRAWINGS.

ALL OPENINGS AROUND GAS VENTS, DUCTS AND PIPES AT CEILING AND FLOOR LEVELS SHALL HAVE FIREBLOCKING AS PER 2019 C.R.C. R302.1.2 & C.R.C. 1003.19

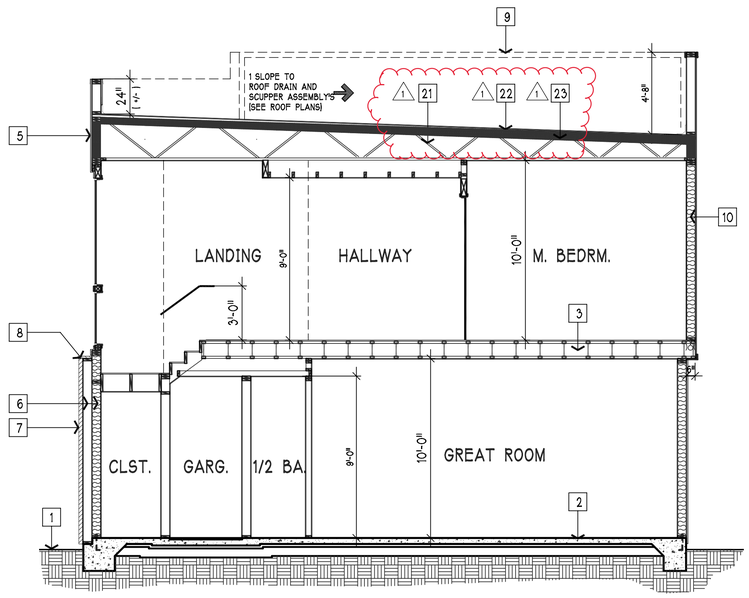

CROSS-SECTION "2"

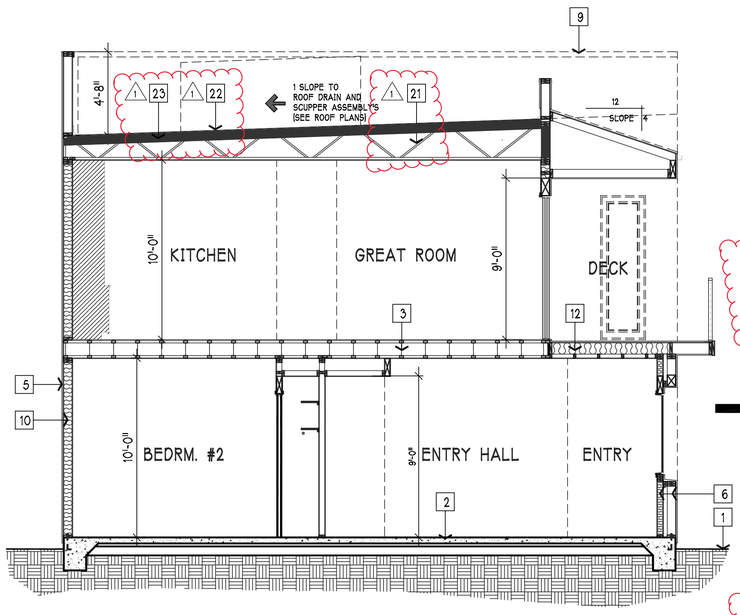

CROSS-SECTION "3"

CROSS-SECTIONAL KEYNOTES:

1	EXPECTED FINISH GRADE LINE (SEE CIVIL ENGINEERS DOCUMENTS)
2	ENGINEERED 1ST FLOOR CONCRETE SLAB (SEE STRUCTURAL DOCUMENTS)
3	ENGINEERED TJI TRUSS JOIST 2ND LEVEL FLOOR FRAMING ASSEMBLY (SEE STRUCTURAL DOCUMENTS)
4	GARAGE CONCRETE SLAB FLOOR
5	DRI-VIT EXTERIOR PLASTER WALL COATING W/ SMOOTH TROWEL FINISH * (INTRIGAL COLOR)
6	DOUBLE STUD 6" FURRED WALL FOR MASONRY FACE
7	MANUFACTURED STONE VENEER BY EL DORADO STONE (OR EQUAL)
8	MASONRY VENEER WALL CAP BY EL DORADO STONE (OR EQUAL)
9	PARAPET ROOF WALL BEYOND (SHOWN FOR REFERENCE ONLY)
⚠1 10	R-21 FIBERGLASS BATT EXTERIOR WALL INSULATION (SEE TITLE #24 REPORT)
⚠1 11	R-15 FIBERGLASS BATT INTERIOR GARAGE FIREWALL INSULATION (SEE TITLE #24 REPORT)
⚠1 12	R-30 FIBERGLASS BATT FLOOR INSULATION (SEE TITLE #24 REPORT)
13	EXPOSED ENGINEERED "I" BEAM W/ POWDER COAT COLOR FINISH
14	2X S4S D.F HORIZONTAL BAND TRIM W/ COLOR COAT DRI-VIT FINISH
15	HORIZONTAL WIRED AND TURNBUCKLE DECK RAILING W/ HORIZONTAL UNITS SPACED IN SUCH A MANNER SO AS TO PREVENT THE PASSAGE OF A 4" DIA. SPHERE (TYPICAL)
16	SECTIONAL OVERHEAD GARAGE DOOR W/ FROSTED TRANSLUCENT NATURAL LIGHT PENITRATING DOOR PANELS
17	2" WALL RECESS AT ALL WINDOW AND DOORS (TYPICAL)
18	ROOF PARAPET WALL LINE BEYOND (REAR ELEVATION)
19	EXPECTED FINISH ROOF LINE BEYOND
20	1" HORIZONTAL G.I. STUCCO SCREED W/ BRUSHED FINISH
⚠1 21	PRE-FABRICATED ROOF TRUSS SYSTEM (SUBMITTED UNDER SEPERATE / DEFERRED PERMIT W/ 2 SLOPE TO ROOF DRAINS AND SCUPPER ASSEMBLY'S (SEE ROOF PLANS SHEETS THIS SUBMITTAL)
⚠1 22	FINISH ROOFING SEALANT AND ROOFING MATERIAL SEE ROOFING PLANS THIS SUBMITTAL)
⚠1 23	R-38 AIR-IMPERMEABLE SPRAY OPEN CELL ATTIC INSULATION (SEE DETAIL "4" SHEET B1-A5.2)

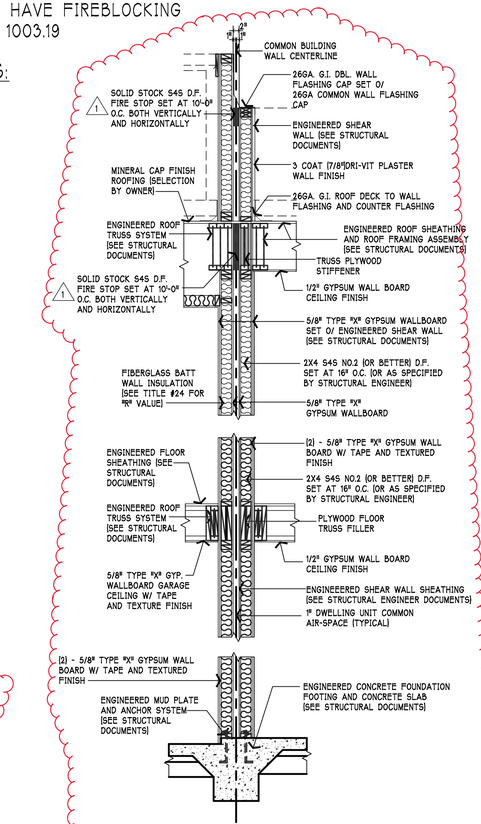

(2) 1 HOUR RATED LOAD BEARING INTERIOR WALL
USG UL U305 - FIRE RATING: 1 HOUR EA. WALL
SYSTEM STC: 33

⚠COMMON FIREWALL FRAMING DETAIL

SCALE: 1" = 1'-0"

CROSS-SECTIONAL ELEVATIONS BUILDING "1"

SCALE: 1/4" = 1'-0"

NOTE:
THERMAL AND ACOUSTICAL INSULATION LOCATED ON OR WITHIN THE FLOOR-CEILING OR, ROOF-CEILING ASSEMBLIES, CRAWL-SPACES OR PARTITIONS SHALL HAVE A FLAME SPREAD RATING OF 25 OR LESS AND A SMOKE DENSITY RATING OF 450 OR LESS. (AS PER 2001 C.B.C. SECTION 707.)

NOTE: ALL PROJECT CROSS-SECTIONAL ELEVATIONS ARE DIAGRAMTIC ONLY. FOR FRAMING METHODS, BEAM AND JOIST SIZING SEE STRUCTURAL DRAWINGS.

ALL OPENINGS AROUND GAS VENTS, DUCTS AND PIPES AT CEILING AND FLOOR LEVELS SHALL HAVE FIREBLOCKING AS PER 2001 C.B.C. SECTION 708.2.1.

THESE DRAWINGS ARE THE PROPERTY OF OSITO HOLDINGS, LLC AND ARE INTENDED FOR USE SOLELY ON THE PROJECT TITLED HEREON. THESE DRAWINGS AS PROTECTED UNDER COPYRIGHT LAWS ARE NOT TO BE REPRODUCED IN WHOLE OR PART IN ANY MANNER WITHOUT THE EXPRESSED WRITTEN CONSENT OF THE DESIGNER. USE OF THESE DRAWINGS IS LIMITED TO THE SITE INTENDED AND THEIR USE AT ANY OTHER SITE, OR ON OTHER PROJECTS IS PROHIBITED EXCEPT BY PRIOR WRITTEN CONSENT OF THE DESIGNER. ALL REPRODUCTINS OF THESE DRAWINGS, IN WHOLE OR PART, REMAIN UNDER THE OWNERSHIP OF THE DESIGNER AND SHALL BE RETURNED UPON COMPLETION OF THE PROJECT OR UPON REQUEST OF THE DESIGNER.

COPYRIGHT © 2020

OWNER / DEVELOPER:

OSITO HOLDINGS, LLC
P.O. BOX 2827
MESA, AZ 85214
(480) 646.6323

PROJECT:

TENNANT SQUARE
215 TENNANT AVENUE
MORGAN HILL, CA.
COUNTY OF
SANTA CLARA

DRAWING:

CROSS-SECTIONAL ELEVATIONS BUILDING "1" AND FIREWALL FRAMING DETAIL

LICENSED ARCHITECT
ZUISHUANG CHEN
NO. C-28158
REN. 5/31/25
STATE OF CALIFORNIA

REVISIONS:
⚠1 02.20.2023 PLAN CHECK RESPONSE

DATE: JUNE 03, 2024
SCALE: AS NOTED
DRAWN BY: G.E.MOORE
PROJ. MGR. G.E.MOORE
PROJECT FILE: 0.20-TENNANT
DRAWING: B1-A6

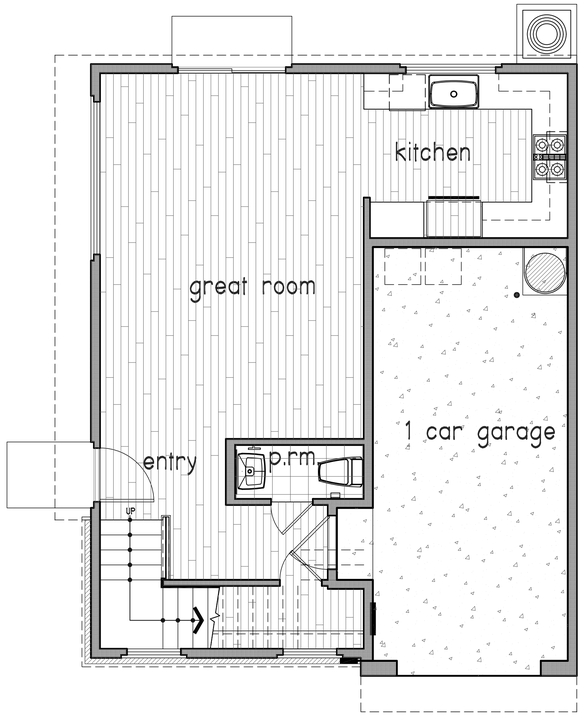

1st level floor plan

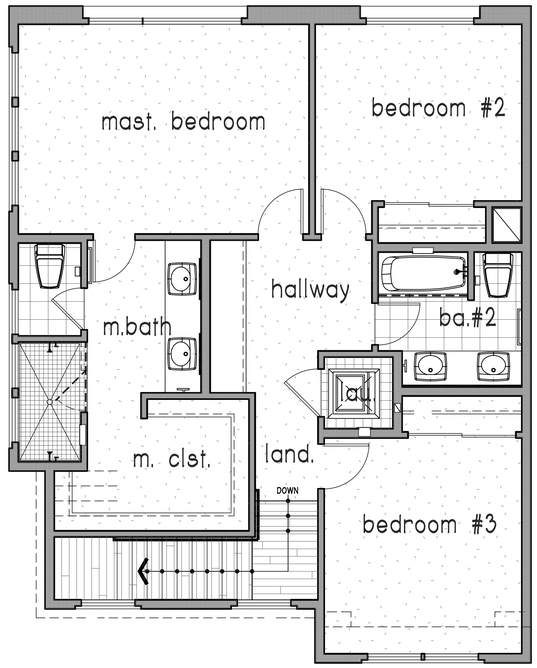

2nd level floor plan

CONCRETE DECK
ALL CONCRETE FINISHES AT PUBLIC AREAS ARE TO HAVE A NON-SLIP OR SKID FINISH (BROOM OR EQUAL)

TILE
"SALTILLO TILE" SET W/ THIN-SET AT ALL EXTERIOR DECK AREAS W/ 1" GROUT JOINT. (SET W/ MASTIC AND HARDY BACKER-BOARD AT ALL INTERIOR FLOOR AREAS

CARPET
CARPET FLOORING W/ STAIN GUARD FINISH SET OVER 5/8" PAD. (ALLOW HOME OWNERS BUDGET OF $40.00 PER SQUARE YARD (TO INCLUDE INSTALLATION) (CARPET SELECTION BY HOME OWNERS)

WOOD FLOORING
RANDOM WIDTH & LENGTH RED OAK HARDWOOD FLOORING W/ CHERRY STAIN TO MATCH STAIR TREADS AND NOSING

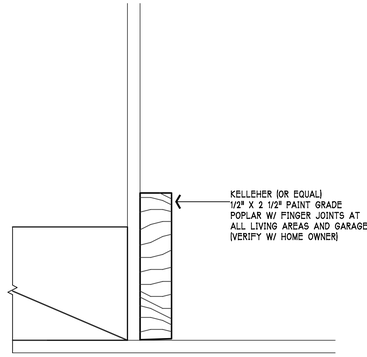

1 PAINT GRADE BASEBOARD SECTION
NOT TO SCALE

FLOOR PLAN "A" - FLOOR FINISH PLAN

SCALE: 1/4" = 1'-0"

THESE DRAWINGS ARE THE PROPERTY OF OSITO HOLDINGS, LLC AND ARE INTENDED FOR USE SOLELY ON THE PROJECT TITLED HEREON. THESE DRAWINGS AS PROTECTED UNDER COPYRIGHT LAWS ARE NOT TO BE REPRODUCED IN WHOLE OR PART IN ANY MANNER WITHOUT THE EXPRESSED WRITTEN CONSENT OF THE DESIGNER. USE OF THESE DRAWINGS IS LIMITED TO THE SITE INTENDED AND THEIR USE AT ANY OTHER SITE, OR ON OTHER PROJECTS IS PROHIBITED EXCEPT BY PRIOR WRITTEN CONSENT OF THE DESIGNER. ALL REPRODUCTINS OF THESE DRAWINGS, IN WHOLE OR PART, REMAIN UNDER THE OWNERSHIP OF THE DESIGNER AND SHALL BE RETURNED UPON COMPLETION OF THE PROJECT OR UPON REQUEST OF THE DESIGNER.

COPYRIGHT © 2020

OWNER / DEVELOPER:

OSITO HOLDINGS, LLC
P.O. BOX 2827
MESA, AZ 85214
(480) 646.6323

PROJECT:

TENNANT SQUARE
215 TENNANT AVENUE
MORGAN HILL, CA.
COUNTY OF
SANTA CLARA

DRAWING:

FLOOR PLAN "A" - FLOOR FINISH PLAN

LICENSED ARCHITECT
ZUISHUANG CHEN
NO. C-28156
REN. 5/31/25
STATE OF CALIFORNIA

REVISIONS:

DATE: JUNE 03, 2024
SCALE: AS NOTED
DRAWN BY: G.E.MOORE
PROJ. MGR. G.E.MOORE
PROJECT FILE: 0.20-TENNANT
DRAWING: B1-A7

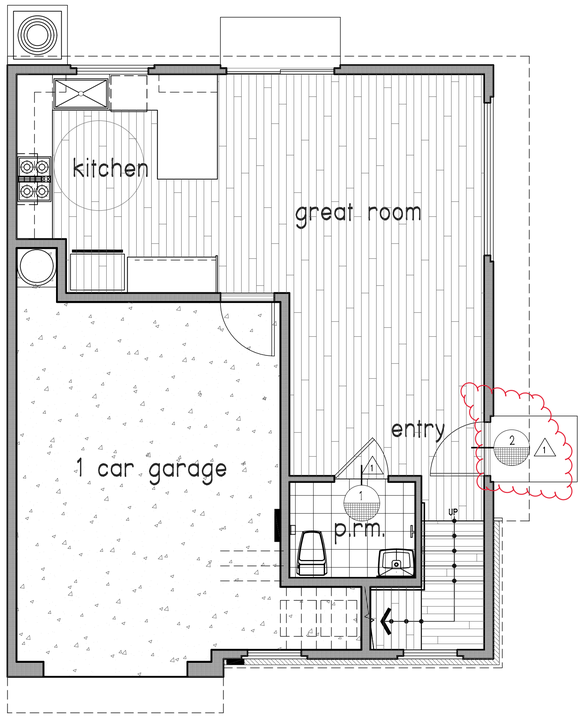

1st level floor plan

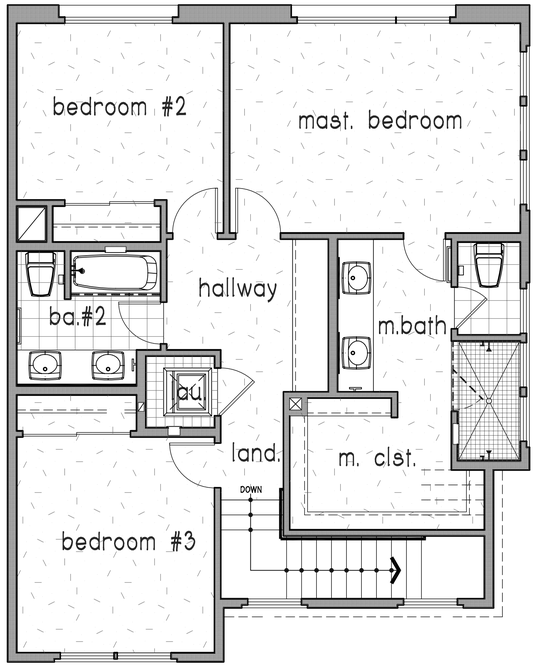

2nd level floor plan

CONCRETE DECK
ALL CONCRETE FINISHS AT PUBLIC AREAS ARE TO HAVE A NON-SLIP OR SKID FINISH (BROOM OR EQUAL)

TILE
"SALTILLO TILE" SET W/ THIN-SET AT ALL EXTERIOR DECK AREAS W/ 1" GROUT JOINT. (SET W/ MASTIC AND HARDY BACKER-BOARD AT ALL INTERIOR FLOOR AREAS

CARPET
CARPET FLOORING W/ STAIN GUARD FINISH SET OVER 5/8" PAD. (ALLOW HOME OWNERS BUDGET OF $40.00 PER SQUARE YARD (TO INCLUDE INSTALLATION) (CARPET SELECTION BY HOME OWNERS)

WOOD FLOORING
RANDOM WIDTH & LENGTH RED OAK HARDWOOD FLOORING W/ CHERRY STAIN TO MATCH STAIR TREADS AND NOSING

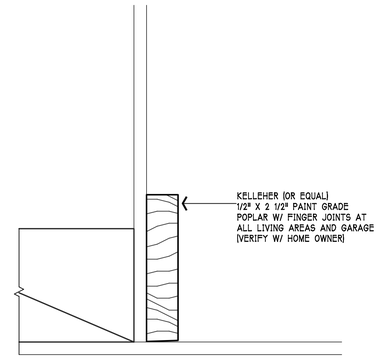

1 PAINT GRADE BASEBOARD SECTION
NOT TO SCALE

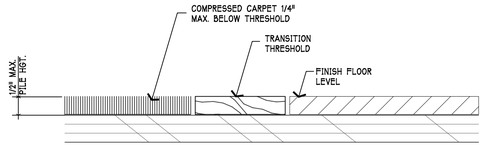

1 TRANSITION BETWEEN FLOOR FINISHES

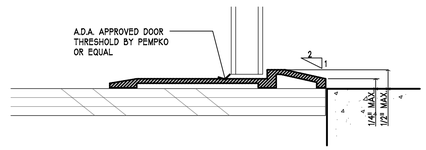

2 ENTRY DOOR THRESHOLD

FLOOR FINISH TRANSITIONS AT ACCESSIBLE ROUTE
NOT TO SCALE

FLOOR PLAN "A" - A.D.A. UNIT (floor finish plan)
SCALE: 1/4" = 1'-0"

THESE DRAWINGS ARE THE PROPERTY OF OSITO HOLDINGS, LLC AND ARE INTENDED FOR USE SOLELY ON THE PROJECT TITLED HEREON. THESE DRAWINGS AS PROTECTED UNDER COPYRIGHT LAWS ARE NOT TO BE REPRODUCED IN WHOLE OR PART IN ANY MANNER WITHOUT THE EXPRESSED WRITTEN CONSENT OF THE DESIGNER. USE OF THESE DRAWINGS IS LIMITED TO THE SITE INTENDED AND THEIR USE AT ANY OTHER SITE, OR ON OTHER PROJECTS IS PROHIBITED EXCEPT BY PRIOR WRITTEN CONSENT OF THE DESIGNER. ALL REPRODUCTINS OF THESE DRAWINGS, IN WHOLE OR PART, REMAIN UNDER THE OWNERSHIP OF THE DESIGNER AND SHALL BE RETURNED UPON COMPLETION OF THE PROJECT OR UPON REQUEST OF THE DESIGNER.
COPYRIGHT © 2020

OWNER / DEVELOPER:
OSITO HOLDINGS, LLC
P.O. BOX 2827
MESA, AZ 85214
(480) 646.6323

PROJECT:
TENNANT SQUARE
215 TENNANT AVENUE
MORGAN HILL, CA.
COUNTY OF
SANTA CLARA

DRAWING:
FLOOR PLAN "A" - ADA - (notes & tags only)

LICENSED ARCHITECT
ZUISHUANG CHEN
NO. C-28156
REN. 5/31/25
STATE OF CALIFORNIA

REVISIONS:
1 02.20.2025 PLAN CHECK RESPONSE

DATE: JUNE 03, 2024
SCALE: AS NOTED
DRAWN BY: G.E.MOORE
PROJ. MGR. G.E.MOORE
PROJECT FILE: 0.20-TENNANT
DRAWING: B1-A71

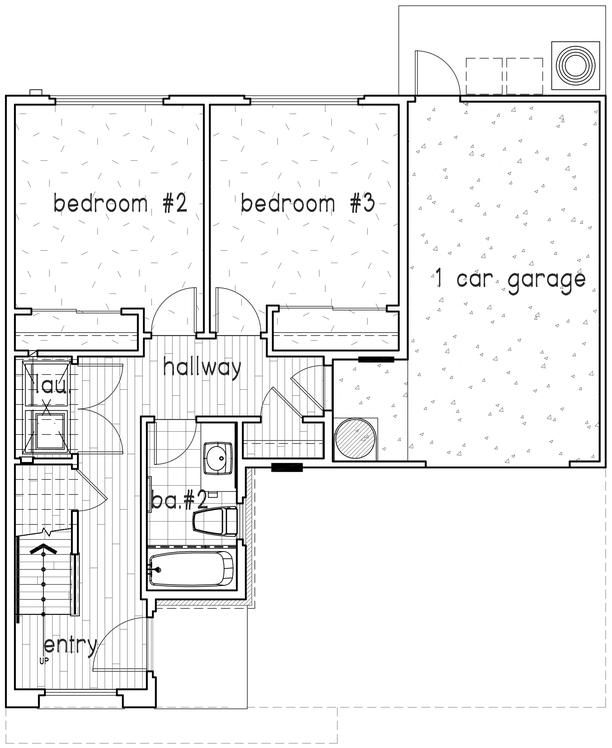

1ST LEVEL FLOOR FINISH PLAN

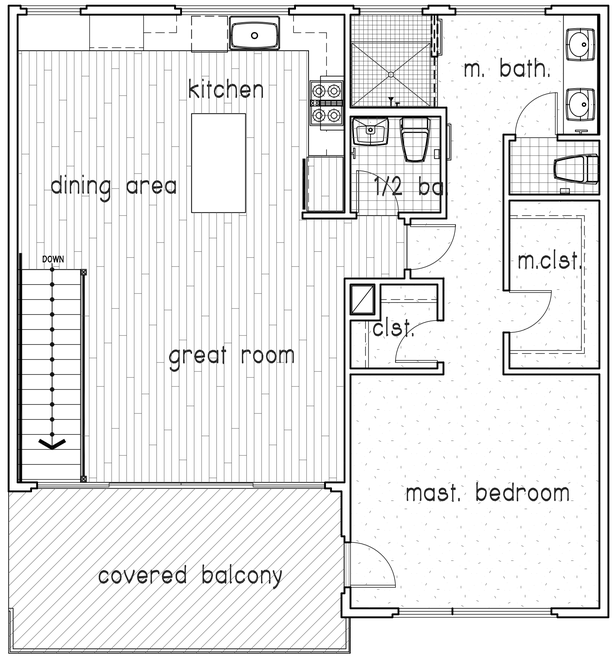

1 2ND LEVEL FLOOR FINISH PLAN

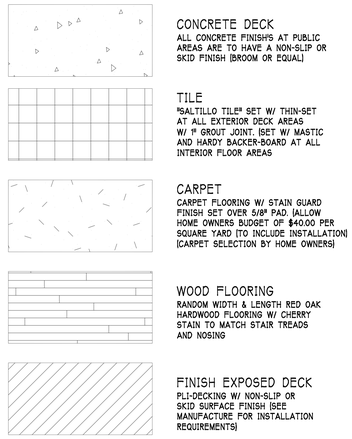

CONCRETE DECK
ALL CONCRETE FINISHS AT PUBLIC AREAS ARE TO HAVE A NON-SLIP OR SKID FINISH (BROOM OR EQUAL)

TILE
"SALTILLO TILE" SET W/ THIN-SET AT ALL EXTERIOR DECK AREAS W/ 1/8" GROUT JOINT. (SET W/ MASTIC AND HARDY BACKER-BOARD AT ALL INTERIOR FLOOR AREAS

CARPET
CARPET FLOORING W/ STAIN GUARD FINISH SET OVER 5/8" PAD. (ALLOW HOME OWNERS BUDGET OF $40.00 PER SQUARE YARD (TO INCLUDE INSTALLATION) (CARPET SELECTION BY HOME OWNERS)

WOOD FLOORING
RANDOM WIDTH & LENGTH RED OAK HARDWOOD FLOORING W/ CHERRY STAIN TO MATCH STAIR TREADS AND NOSING

FINISH EXPOSED DECK
PLI-DECKING W/ NON-SLIP OR SKID SURFACE FINISH (SEE MANUFACTURE FOR INSTALLATION REQUIREMENTS)

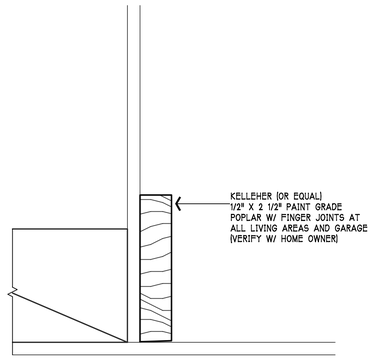

1 PAINT GRADE BASEBOARD SECTION
NOT TO SCALE

FLOOR PLAN "B" FINISH FLOORING PLAN

SCALE: 1/4" = 1'-0"

THESE DRAWINGS ARE THE PROPERTY OF OSITO HOLDINGS, LLC AND ARE INTENDED FOR USE SOLELY ON THE PROJECT TITLED HEREON. THESE DRAWINGS AS PROTECTED UNDER COPYRIGHT LAWS ARE NOT TO BE REPRODUCED IN WHOLE OR PART IN ANY MANNER WITHOUT THE EXPRESSED WRITTEN CONSENT OF THE DESIGNER. USE OF THESE DRAWINGS IS LIMITED TO THE SITE INTENDED AND THEIR USE AT ANY OTHER SITE, OR ON OTHER PROJECTS IS PROHIBITED EXCEPT BY PRIOR WRITTEN CONSENT OF THE DESIGNER. ALL REPRODUCTINS OF THESE DRAWINGS, IN WHOLE OR PART, REMAIN UNDER THE OWNERSHIP OF THE DESIGNER AND SHALL BE RETURNED UPON COMPLETION OF THE PROJECT OR UPON REQUEST OF THE DESIGNER.

COPYRIGHT © 2020

OWNER / DEVELOPER:

OSITO HOLDINGS, LLC
P.O. BOX 2827
MESA, AZ 85214
(480) 646.6323

PROJECT:

TENNANT SQUARE
215 TENNANT AVENUE
MORGAN HILL, CA.
COUNTY OF
SANTA CLARA

DRAWING:

FLOOR PLAN "B" - FINISH FLOORING PLAN

LICENSED ARCHITECT
ZUISHUANG CHEN
NO. C-28156
REN. 5/31/25
STATE OF CALIFORNIA

REVISIONS:
1 02.16.2023 PLAN CHECK RESPONSE

DATE: JUNE 03, 2023
SCALE: AS NOTED
DRAWN BY: G.E.MOORE
PROJ. MGR. G.E.MOORE
PROJECT FILE: 0.20-TENNANT
DRAWING: B1-A72

FULL FRONT EXTERIOR ELEVATION

SCALE: 1/8" = 1'-0"

PARTIAL FRONT EXTERIOR ELEVATION - DETAIL TAGS ONLY

SCALE: 1/4" = 1'-0"

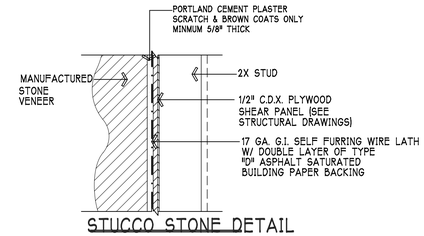

STUCCO STONE DETAIL

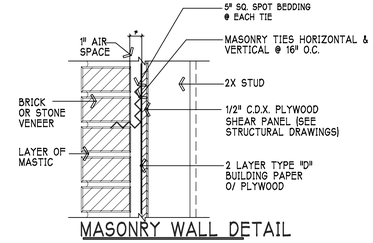

MASONRY WALL DETAIL

NOTE: ANCHORED MASONRY VENEER - USE 22 GA. GALVANIZED SHEET METAL ANCHOR TIES (W/ A LIP OR HOOK ON EXTENDED LEG ENGAGING NO. 9 GA. CONTINUOUS WIRE JOINT REINFORCEMENT) SPACED @ 24" O.C. MAXIMUM HORIZONTAL AND 16" O.C. MAXIMUM VERTICAL - ALTHOUGH SPACING SHOULD RESULT IN ONE ANCHOR PER MAXIMUM 2 SQ. FT. (E.G., ANCHORS @ 16" O.C. VERTICAL & HORIZONTAL).

MASONRY VENEER (STUCCO STONE) INSTALLED IN ACCORDANCE W/ ICBO EVALUATION REPORT #3568 AND PER MANUFACTURER'S INSTRUCTIONS.LISTED INSTALLATION MANUAL TO BE ON SITE FOR CONSTRUCTION AND INSPECTION USE.

MASONRY FRAMING DETAILS AND NOTES

"NOT TO SCALE"

THESE DRAWINGS ARE THE PROPERTY OF OSITO HOLDINGS, LLC AND ARE INTENDED FOR USE SOLELY ON THE PROJECT TITLED HEREON. THESE DRAWINGS AS PROTECTED UNDER COPYRIGHT LAWS ARE NOT TO BE REPRODUCED IN WHOLE OR PART IN ANY MANNER WITHOUT THE EXPRESSED WRITTEN CONSENT OF THE DESIGNER. USE OF THESE DRAWINGS IS LIMITED TO THE SITE INTENDED AND THEIR USE AT ANY OTHER SITE, OR ON OTHER PROJECTS IS PROHIBITED EXCEPT BY PRIOR WRITTEN CONSENT OF THE DESIGNER. ALL REPRODUCTINS OF THESE DRAWINGS, IN WHOLE OR PART, REMAIN UNDER THE OWNERSHIP OF THE DESIGNER AND SHALL BE RETURNED UPON COMPLETION OF THE PROJECT OR UPON REQUEST OF THE DESIGNER.

COPYRIGHT © 2020

OWNER / DEVELOPER:

OSITO HOLDINGS, LLC
P.O. BOX 2827
MESA, AZ 85214
(480) 646.6323

PROJECT:

TENNANT SQUARE
215 TENNANT AVENUE
MORGAN HILL, CA.
COUNTY OF
SANTA CLARA

DRAWING:

FRONT EXTERIOR ELEVATION BUILDINGS
"A" & "B" (DETAIL TAGS ONLY)

LICENSED ARCHITECT
ZUISHUANG CHEN
NO. C-28156
REN. 5/31/25
STATE OF CALIFORNIA

REVISIONS:

DATE: JUNE 03, 2024
SCALE: AS NOTED
DRAWN BY: G.E.MOORE
PROJ. MGR. G.E.MOORE
PROJECT FILE: 0.20-TENNANT
DRAWING: B1-A8

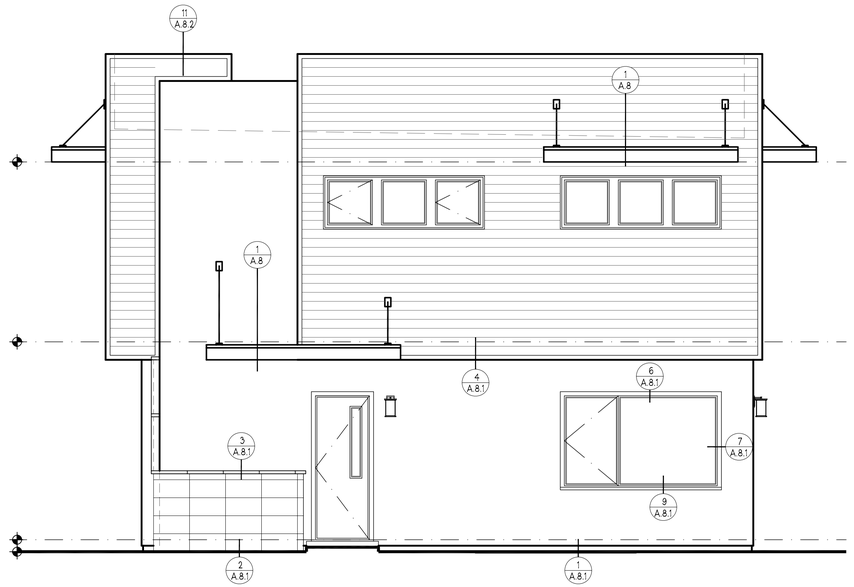

Right Side Elevation

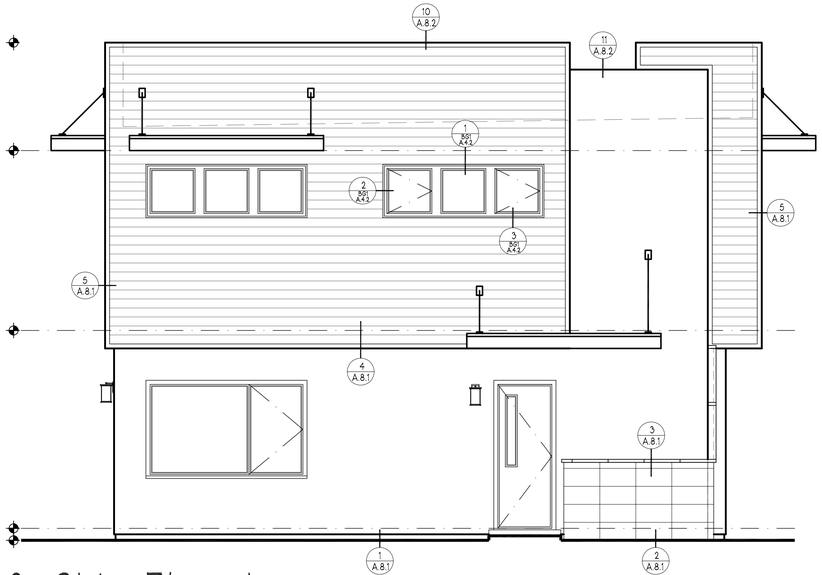

Left Side Elevation

END EXTERIOR ELEVATIONS

SCALE: 1/4" = 1'-0"

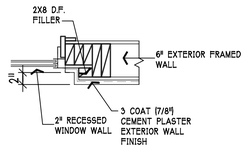

7. WINDOW JAMB FRAMING DETAIL

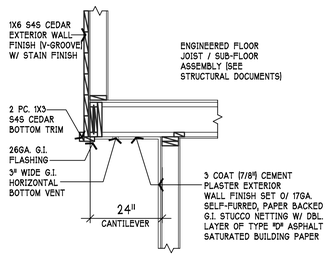

4. CANTILEVER TRIM FRAMING DETAIL

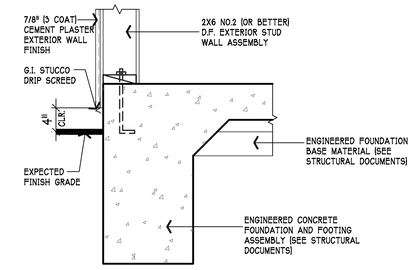

1. DRIP SCREED FRAMING DETAIL

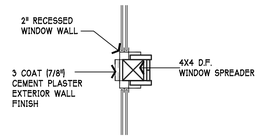

8. WINDOW FRAMING DETAIL

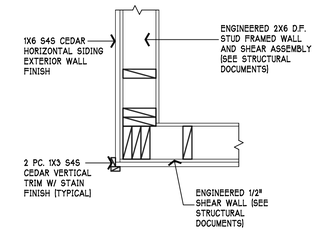

5. EXTER. WALL VERTICAL TRIM DETAIL

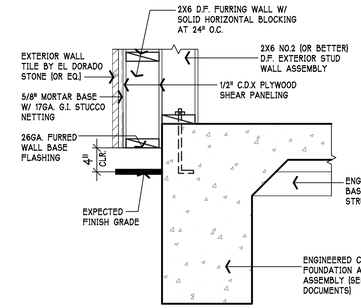

2. FURRED MASONRY WALL FRAMING DETAIL

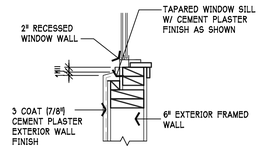

9. WINDOW SILL FRAMING DETAIL

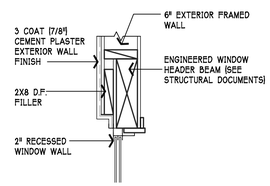

6. WINDOW HEADER FRAMING DETAIL

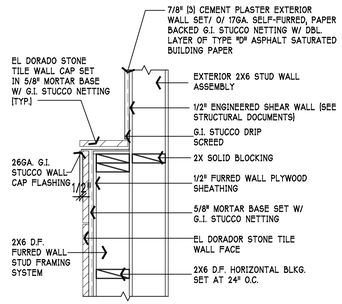

3. FURRED TILE WALL CAP FRAMING DETAIL

THESE DRAWINGS ARE THE PROPERTY OF OSITO HOLDINGS, LLC AND ARE INTENDED FOR USE SOLELY ON THE PROJECT TITLED HEREON. THESE DRAWINGS AS PROTECTED UNDER COPYRIGHT LAWS ARE NOT TO BE REPRODUCED IN WHOLE OR PART IN ANY MANNER WITHOUT THE EXPRESSED WRITTEN CONSENT OF THE DESIGNER. USE OF THESE DRAWINGS IS LIMITED TO THE SITE INTENDED AND THEIR USE AT ANY OTHER SITE, OR ON OTHER PROJECTS IS PROHIBITED EXCEPT BY PRIOR WRITTEN CONSENT OF THE DESIGNER. ALL REPRODUCTINS OF THESE DRAWINGS, IN WHOLE OR PART, REMAIN UNDER THE OWNERSHIP OF THE DESIGNER AND SHALL BE RETURNED UPON COMPLETION OF THE PROJECT OR UPON REQUEST OF THE DESIGNER.

COPYRIGHT © 2020

OWNER / DEVELOPER:

OSITO HOLDINGS, LLC
P.O. BOX 2827
MESA, AZ 85214
(480) 646.6323

PROJECT:

TENNANT SQUARE
215 TENNANT AVENUE
MORGAN HILL, CA.
COUNTY OF
SANTA CLARA

DRAWING:

SIDE / END EXTERIOR ELEVATIONS
(DETAIL TAGS ONLY)

LICENSED ARCHITECT
ZUISHUANG CHEN
NO. C-28156
REN. 5/31/25
STATE OF CALIFORNIA

REVISIONS:

DATE: JUNE 03, 2024
SCALE: AS NOTED
DRAWN BY: G.E.MOORE
PROJ. MGR. G.E.MOORE
PROJECT FILE: 0.20-TENNANT
DRAWING: B1-81

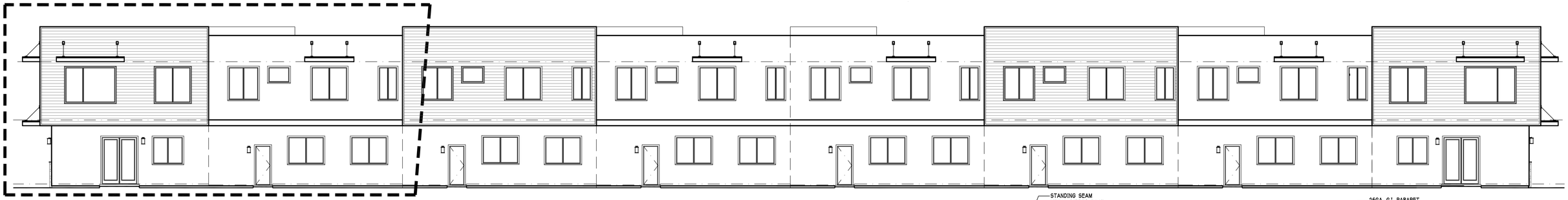

Rear Exterior Elevation

SCALE: 1/8" = 1'-0"

PARTIAL REAR EXTERIOR ELEVATION (DETAIL TAGS ONLY)

SCALE: 1/4" = 1'-0"

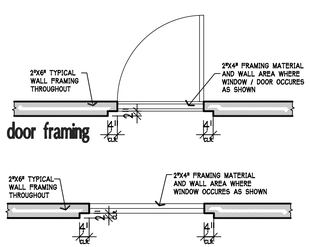

NOTE: WALL THICKNESS VARIES THE GENERAL CONTRACTOR IS TO FAMILERIZE HIM SELF W/ VARIOUS WALL THICKNESS'S.

EXTERIOR DOOR & WINDOW RECESSED DETAIL

SCALE: 1" = 1'-0"

MISC. FRAMING DETAILS

SCALE: 1/4" = 1'-0"

NOTE: GUARDRAILS (STAIR RAILINGS) C.R.C. - R 312 - SHALL BE INSTALLED ALONG OPEN-SIDED WALKING SURFACES, INLCUDING STAIRS, RAMPS, AND LANDINGS, THAT ARE LOCATED MORE THAN 30" ABOVE THE FLOOR OR GRADE BELOW AT ANY POINT WITHIN 36" HORIZONTALLY TO THE EDGE OF THE OPEN SIDE. (C.R.C. R 312.1)

FOR RL-3 OCCUPANCIES MAX RISE FOR THE STAIRS IS 7.75" RISE (MAX) AND 10" RUN (MIN) STAIR RISE AND RUN ARE TO CONFORM TO C.R.C. R311.7.4, EXCEPTION 1. THE TRIANGULAR OPENINGS FORMED BY THE RISER, TREAD AND BOTTOM ELEMENT OF STAIR GUARDRAIL ARE TO BE OF SUCH A SIZE THAT A SPHERE 4" IN DIA. CANNOT PASS THROUGH - C.R.C. R312.3 EXCEPTION 1.

ALL VERTICAL STAIR RAILS ARE TO BE SET IN SUCH A MANNER SO AS TO PREVENT THE PASSAGE OF A 4" DIA. SPHERE (TYPICAL THROUGHT)

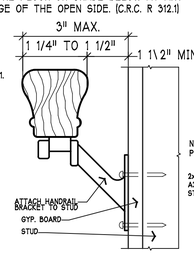

TYPICAL HANDRAIL DETAIL

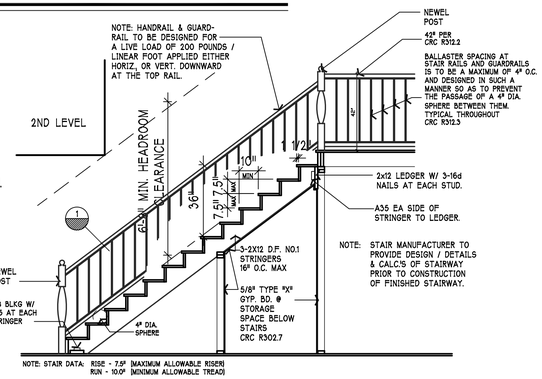

TYPICAL STAIR DETAIL

NOT TO SCALE

Stair Framing Details

SCALE AS NOTED

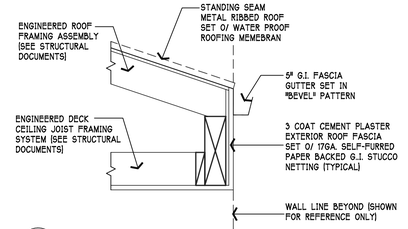

13. ROOF FASCIA FRAMING DETAIL

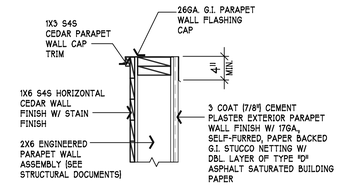

10. PARAPET WALL CAP FRAMING DETAIL

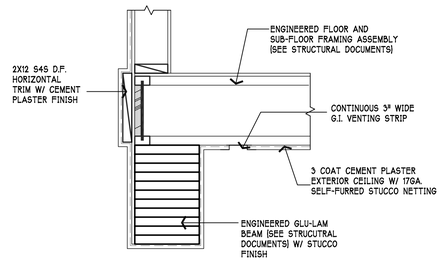

14. TRIM / BEAM FRAMING DETAIL

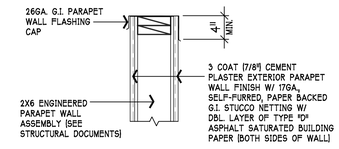

11. PARAPET WALL CAP FRAMING DETAIL

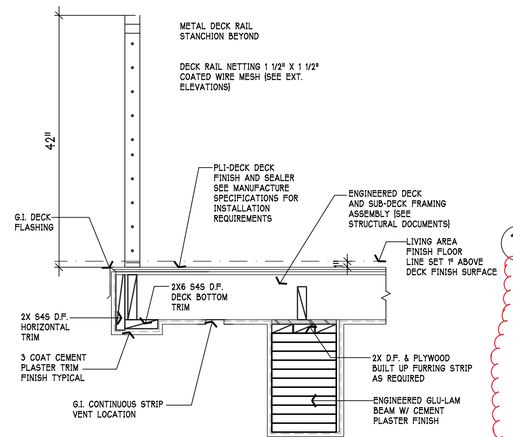

15. DECK RAIL AND TRIM DETAIL

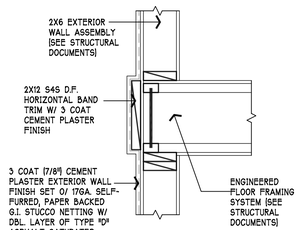

12. HORIZONTAL BAND TRIM DETAIL

NOTE: WHERE BALCONIES OR OTHER ELEVATED WALKING SURFACES ARE EXPOSED TO WATER FROM DIRECT OR BLOWING RAIN, SNOW OR IRRIGATION, AND THE STRUCTURAL FRAMING IS PROTECTED BY AN IMPERIOUS MOISTURE BARRIER, ALL ELEMENTS OF THE IMPERVIOUS MOISTURE BARRIER SYSTEM SHALL NOT BE CONCEALED UNTIL INSPECTED AND APPROVED (R109.1.5.3 C.R.C.)

BALCONY / DECK VENTILATION SCHEDULE:

BALCONY / DECK AREA: 166.500 S.F./150 = 1.110 SQ. FT. OF VENTING REQUIRED
1.110 SQ. FT. X 144 SQ. IN. = 159.840 SQ. IN. OF DECK VENTING REQUIRED
159.840 / 144 = 1.110 VENTS (1.110 VENTS REQUIRED)
PROVIDE: (1.110) - 3" X 120" CONTINUOUS G.I. VULCAN SOFFIT VENTS W/ A TOTAL OF 1.110 SQUARE FEET OF NFVA - (159.840 SQ. INCHES) (VULCAN SOFFIT CONTINUOUS FIRE & EMBER RESISTANT CHP 7A WUI (WILDLAND URBAN INTERFACE) COMPLIANT)

THESE DRAWINGS ARE THE PROPERTY OF OSITO HOLDINGS, LLC AND ARE INTENDED FOR USE SOLELY ON THE PROJECT TITLED HEREON. THESE DRAWINGS AS PROTECTED UNDER COPYRIGHT LAWS ARE NOT TO BE REPRODUCED IN WHOLE OR PART IN ANY MANNER WITHOUT THE EXPRESSED WRITTEN CONSENT OF THE DESIGNER. USE OF THESE DRAWINGS IS LIMITED TO THE SITE INTENDED AND THEIR USE AT ANY OTHER SITE, OR ON OTHER PROJECTS IS PROHIBITED EXCEPT BY PRIOR WRITTEN CONSENT OF THE DESIGNER. ALL REPRODUCTINS OF THESE DRAWINGS, IN WHOLE OR PART, REMAIN UNDER THE OWNERSHIP OF THE DESIGNER AND SHALL BE RETURNED UPON COMPLETION OF THE PROJECT OR UPON REQUEST OF THE DESIGNER.

COPYRIGHT © 2020

OWNER / DEVELOPER:

OSITO HOLDINGS, LLC
P.O. BOX 2827
MESA, AZ 85214
(480) 646.6323

PROJECT:

TENNANT SQUARE
215 TENNANT AVENUE
MORGAN HILL, CA.
COUNTY OF
SANTA CLARA

DRAWING:

REAR EXTERIOR ELEVATION BUILDINGS "A" & "B" (DETAIL TAGS ONLY)
MISC. FRAMING DETAILS

LICENSED ARCHITECT
ZUISHUANG CHEN
NO. C-28156
REN. 5/31/25
STATE OF CALIFORNIA

REVISIONS:
1 02.20.2025 PLAN CHECK RESPONSE

DATE: JUNE 03, 2024
SCALE: AS NOTED
DRAWN BY: G.E.MOORE
PROJ. MGR. G.E.MOORE
PROJECT FILE: 0.20-TENNANT
DRAWING: B1-A82

GENERAL :

1. MATERIALS USED IN THE FIRE SAFING SYSTEMS ARE TO BE INSTALLED IN ACCORDANCE WITH THE MAUFACTURER'S WRITTEN INSTRUCTIONS PROVIDED WITH THE MATERIALS AND SHALL BE UL LISTED AS FIRE RATED PRODUCTS.

2. PER CBC 713.3.1.2 THE F RATINGS OF THROUGH HORIZONTAL PENETRATION OF FIRE STOPS SHALL NOT BE LESS THAN THE FIRE RESISTANCE OF THE ASSEMBLY PENETRATED AND SHALL BE SUITABLE FOR THE METHOD OF, AND MATERIALS SURROUNDING THE PENETRATION AND PENETRATING ITEM. THERE SHALL BE NO FLOOR PENETRATIONS FOR THIS PROJECT.

3. FIRE SAFING SYSTEMS ARE SPECIFIC FOR EACH VARYING CONDITION OF A FIRE RATED WALL OR FLOOR ASSEMBLY, THE PENETRATING ITEM(S), AND THE MATERIALS SELECTED TO PREVENT THE SPREAD OF FIRE THROUGH THE PENETRATION. THE SAFING MATERIALS DESIGNATED FOR USE IN FIRE ASSEMBLIES ARE NOT PROVIDED WITH SPECIFIC FIRE RATINGS. SAFING MATERIALS SHALL BE SELECTED PER EACH MANUFACTURERS TECHNICAL PRODUCT LITERATURE FOR EACH CONDITION ENCOUNTERED AND DOCUMENTED IN SHOP DRAWINGS FOR REVIEW BY THE MANUFACTURER, CONTRACTOR, BUILDING DEPARTMENT AND ARCHITECT.

ACCEPTABLE MANUFACTURERS OF FIRE STOPPING PRODUCTS SHALL BE AS FOLLOWS:

A. 3M FIRE PROTECTION PRODUCTS.
B. HILTI CONSTRUCTION CHEMICALS, INC.
C. SEE SPECIFICATIONS FOR ADDITIONAL ACCEPTABLE MANUFACTURERS.

PRODUCTS SHALL BE LISTED WITH A RECOGNIZED TESTING AGENCY SUCH AS ICBO, UNDERWRITER LABRATORIES OR WARNOCK HERSEY, "OR EQUAL" MANUFACTURERS WILL BE CONSIDERED IF TESTING AGENCY APPROVALS ARE PROVIDED.

4. DETAILS SHOWN ARE EXEMPLARY ONLY, AS EXACT CONDITIONS ARE UNKNOWN. ALL PENETRATIONS SHALL MEET THE CONDITIONS SET FORTH IN CBC SECTION 713
5. DETAILS SHOWN ARE TYPICAL DETAILS. IF FIELD CONDITIONS DO NOT MATCH REQUIREMENTS OF TYPICAL DETAILS, APPROVED ALTERNATE DETAILS SHALL BE UTILIZED. FIELD CONDITIONS AND DIMENSIONS NEED TO BE VERIFIED FOR COMPLIANCE WITH THE DETAILS, INCLUDING BUT NOT LIMITED TO THE FOLLOWING: * MINIMUM AND MAXIMUM WIDTH OF JOINTS * TYPE AND THICKNESS OF FIRE-RATED CONSTRUCTION. THE MINIMUM ASSEMBLY RATING OF THE FIRESTOP ASSEMBLY SHALL MEET OR EXCEED THE HIGHEST RATING OF THE ADJACENT CONSTRUCTION.
6. IF ALTERNATE DETAILS MATCHING THE FIELD CONDITIONS ARE NOT AVAILABLE, MANUFACTURERS ENGINEERING JUDGMENT DRAWINGS ARE ACCEPTABLE. DRAWINGS SHALL FOLLOW THE INTERNATIONAL FIRESTOP COUNCIL (IFC) GUIDELINES FOR EVALUATING FIRESTOP SYSTEMS ENGINEERING JUDGMENTS.
7. REFERENCES:
   * 2013 UNDERWRITERS LABORATORIES FIRE RESISTANCE DIRECTORY, VOLUMES 1 & 2
   * NFPA 101 LIFE SAFETY CODE
   * NFPA 70 - NATIONAL ELECTRIC CODE
   * ALL GOVERNING LOCAL AND REGIONAL BUILDING CODES
8. FIRESTOP SYSTEM INSTALLATION MUST MEET REQUIREMENTS OF ASTM E-814 (UL 1479) TESTED ASSEMBLIES THAT PROVIDE A FIRE RATING EQUAL TO THAT OF CONSTRUCTION BEING PENETRATED.
9. ALL RATED THROUGH-PENETRATION ASSEMBLIES SHALL BE PROMINENTLY LABELED WITH THE FOLLOWING INFORMATION:
   * ATTENTION: FIRE RATED ASSEMBLY
   * UL SYSTEM # * PRODUCT(S) USED
   * HOURLY RATING (F-RATING)
   * INSTALLATION DATE
10. FOR OUTLET BOXES REQUIRING PROTECTION, USE ONLY WALL OPENING PROTECTIVE MATERIALS, CATEGORY CLIV AS CLASSIFIED BY UNDERWRITER'S LABORATORIES, FIRE RESISTANCE DIRECTORY (VOLUME 1.)

FIRESTOPPING NOTES

NOT TO SCALE

12. RATED WALL PENETRATION NOTES

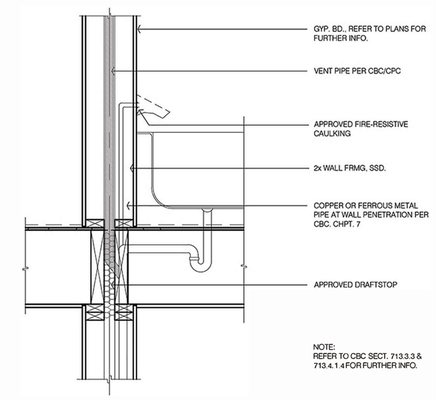

NOT TO SCALE

9. TUB PIPE AT RATED WALL

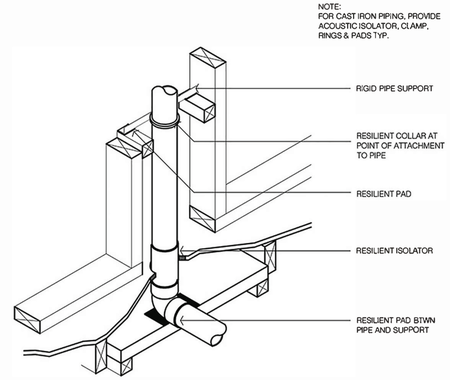

NOT TO SCALE

10. SOUND CONTROL PIPE SUPPORT

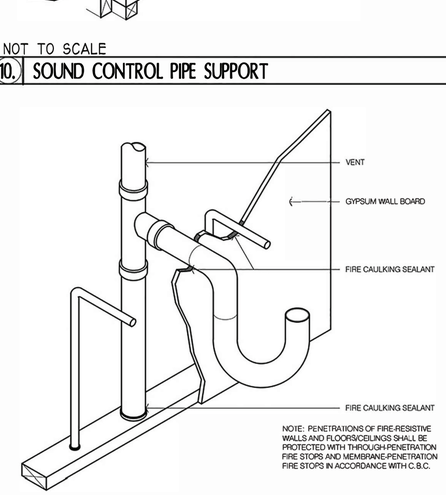

NOT TO SCALE

11. PIPE PENETRATION

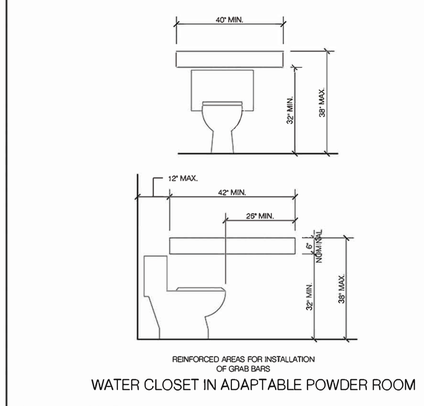

WATER CLOSET IN ADAPTABLE POWDER ROOM

NOT TO SCALE

6. REQUIRED GRAB BAR BACKING

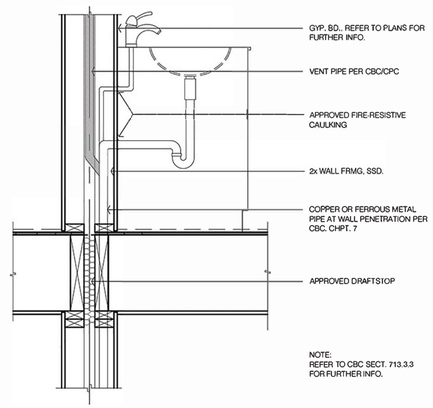

NOT TO SCALE

7. LAVITORY PIPE AT RATED WALL

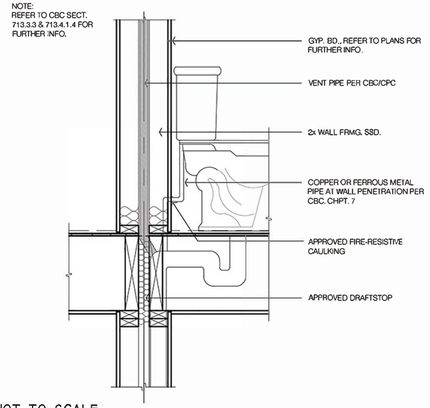

NOT TO SCALE

8. TOILET PIPE AT RATEED WALL

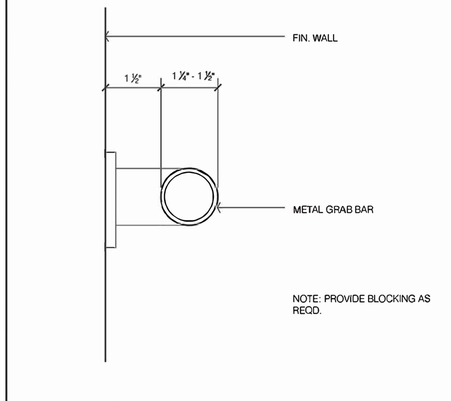

NOT TO SCALE

3. GRAB BAR REQUIREMENTS

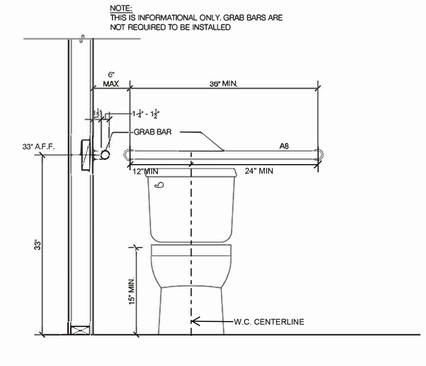

NOT TO SCALE

4. GRAB BARS AT WATER CLOSET

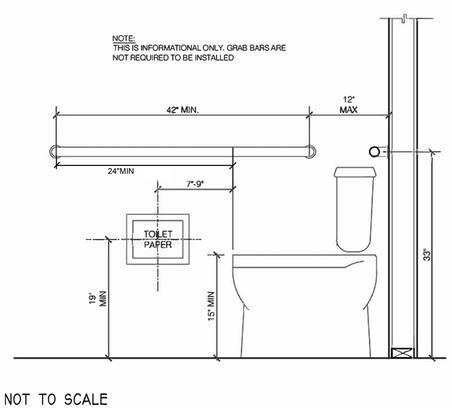

NOT TO SCALE

5. GRAB BARS AT WATER CLOSET W/ T.P. HOLDER

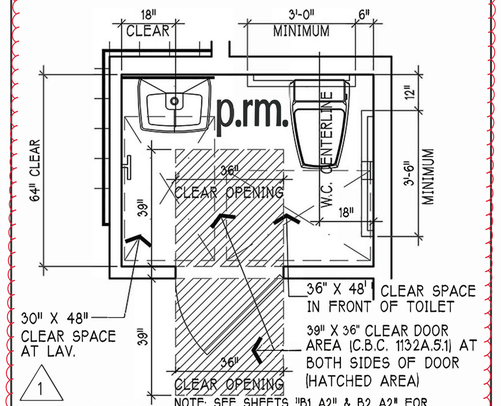

1. FLOOR PLAN "A" ~ A.D.A. POWDER ROOM FLOOR PLAN

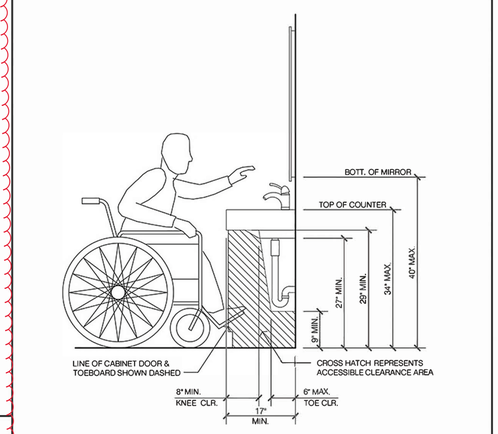

NOTE:
EXPOSED HOT WATER LINES SHALL BE INSULATED

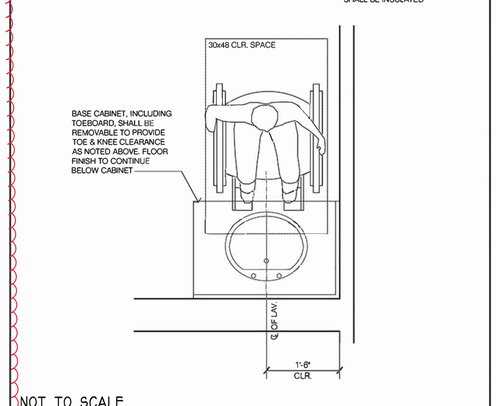

NOT TO SCALE

2. A.D.A. POWDER ROOM "CLEARANCE"

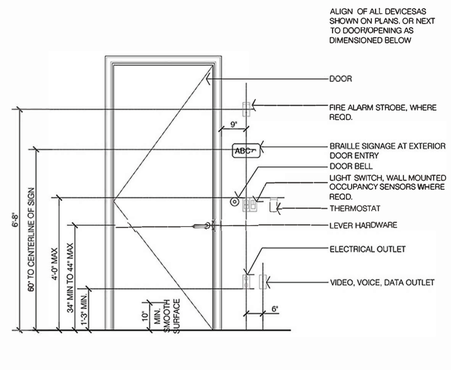

NOT TO SCALE

13. A.D.A. DEVICE MOUNTING HEIGHTS

THESE DRAWINGS ARE THE PROPERTY OF OSITO HOLDINGS, LLC AND ARE INTENDED FOR USE SOLELY ON THE PROJECT TITLED HEREON. THESE DRAWINGS AS PROTECTED UNDER COPYRIGHT LAWS ARE NOT TO BE REPRODUCED IN WHOLE OR PART IN ANY MANNER WITHOUT THE EXPRESSED WRITTEN CONSENT OF THE DESIGNER. USE OF THESE DRAWINGS IS LIMITED TO THE SITE INTENDED AND THEIR USE AT ANY OTHER SITE, OR ON OTHER PROJECTS IS PROHIBITED EXCEPT BY PRIOR WRITTEN CONSENT OF THE DESIGNER. ALL REPROUCTINS OF THESE DRAWINGS, IN WHOLE OR PART, REMAIN UNDER THE OWNERSHIP OF THE DESIGNER AND SHALL BE RETURNED UPON COMPLETION OF THE PROJECT OR UPON REQUEST OF THE DESIGNER.

COPYRIGHT © 2020

OWNER / DEVELOPER:

OSITO HOLDINGS, LLC
P.O. BOX 2827
MESA, AZ 85214
(480) 646.6323

PROJECT:

TENNANT SQUARE
215 TENNANT AVENUE
MORGAN HILL, CA.
COUNTY OF
SANTA CLARA

DRAWING:

A.D.A. DETAILS, NOTES
RATED FIREWALL PENETRATIONS AND ASSEMBLIES

LICENSED ARCHITECT
ZUISHUANG CHEN
NO. C-28156
REN. 5/31/25
STATE OF CALIFORNIA

REVISIONS:
⚠ 01202023 PLAN CHECK RESPONSE

DATE: JUNE 05, 2023
SCALE: AS NOTED
DRAWN BY: G.E.MOORE
PROJ. MGR. G.E.MOORE
PROJECT FILE: 0.20-TENNANT
DRAWING: B1-A83

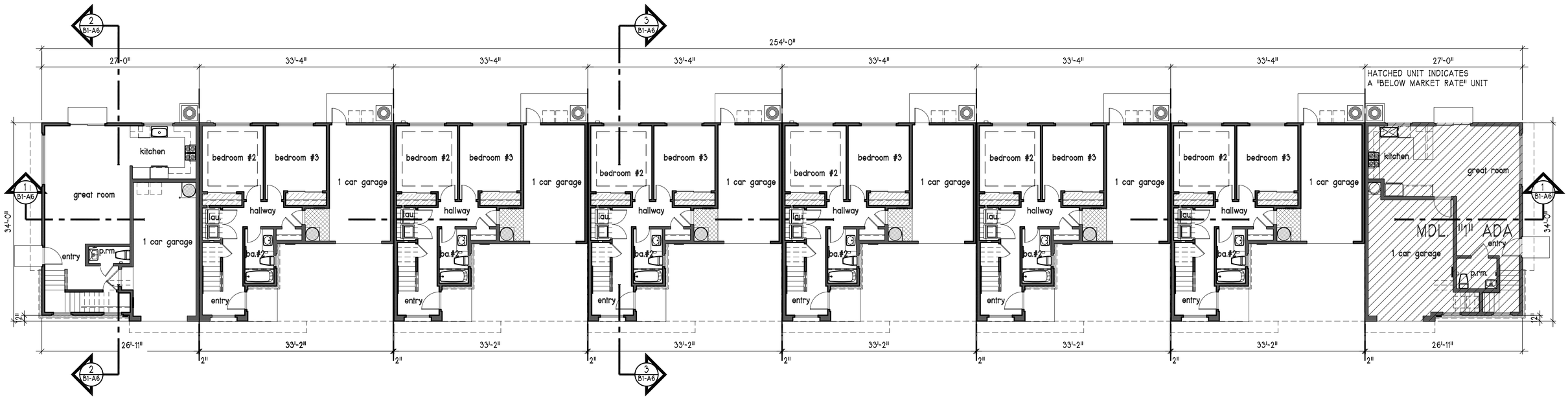

1ST LEVEL MASTER FLOOR PLAN

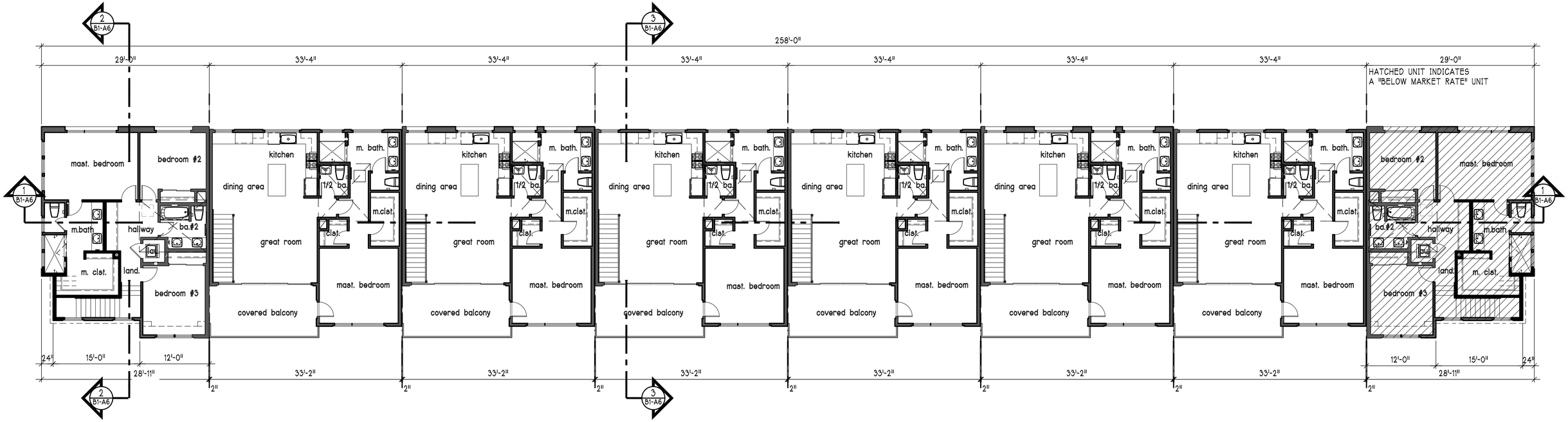

2ND LEVEL MASTER FLOOR PLAN

MASTER FLOOR PLAN BUILDING "2"

SCALE: 1/8" = 1'-0"

THESE DRAWINGS ARE THE PROPERTY OF OSITO HOLDINGS, LLC AND ARE INTENDED FOR USE SOLELY ON THE PROJECT TITLED HEREON. THESE DRAWINGS AS PROTECTED UNDER COPYRIGHT LAWS ARE NOT TO BE REPRODUCED IN WHOLE OR PART IN ANY MANNER WITHOUT THE EXPRESSED WRITTEN CONSENT OF THE DESIGNER. USE OF THESE DRAWINGS IS LIMITED TO THE SITE INTENDED AND THEIR USE AT ANY OTHER SITE, OR ON OTHER PROJECTS IS PROHIBITED EXCEPT BY PRIOR WRITTEN CONSENT OF THE DESIGNER. ALL REPRODUCTIONS OF THESE DRAWINGS, IN WHOLE OR PART, REMAIN UNDER THE OWNERSHIP OF THE DESIGNER AND SHALL BE RETURNED UPON COMPLETION OF THE PROJECT OR UPON REQUEST OF THE DESIGNER.

COPYRIGHT © 2020

OWNER / DEVELOPER:

OSITO HOLDINGS, LLC
P.O. BOX 2827
MESA, AZ 85214
(480) 646.6323

PROJECT:

TENNANT SQUARE
215 TENNANT AVENUE
MORGAN HILL, CA.
COUNTY OF
SANTA CLARA

DRAWING:

MASTER FLOOR PLAN BUILDING "2"

LICENSED ARCHITECT
ZUISHUANG CHEN
NO. C-28156
REN. 5/31/25
STATE OF CALIFORNIA

REVISIONS:
1 02.20.2025 PLAN CHECK RESPONSE

DATE: JUNE 03, 2024
SCALE: AS NOTED
DRAWN BY: G.E.MOORE
PROJ. MGR. G.E.MOORE
PROJECT FILE: 0.20-TENNANT
1 DRAWING: B2 A.0

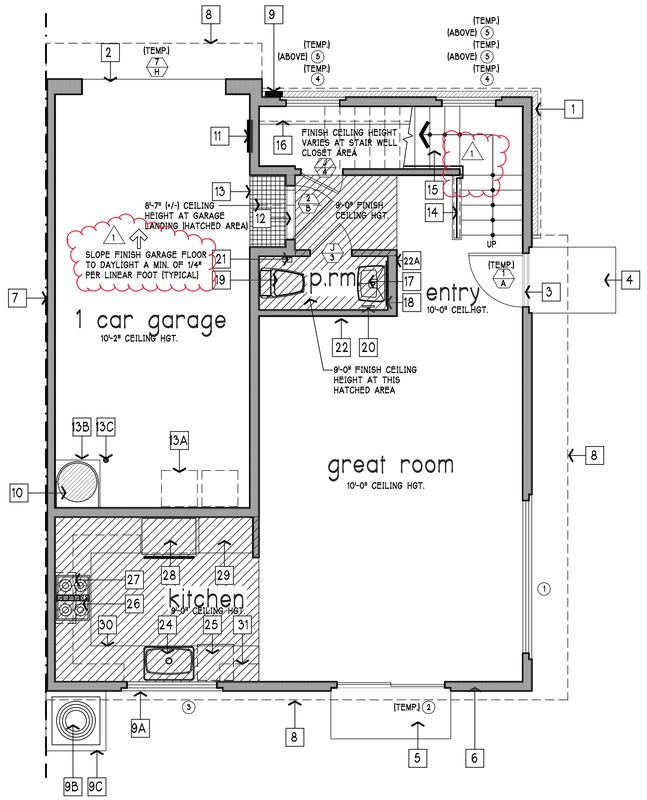

1st level floor plan

631.000 SQUARE FEET

⚠ NOTE: LANDINGS AT THE REQUIRED EGRESS DOOR SHALL NOT BE MORE THAN 1 1/2" LOWER THAN THE TOP OF THE THRESHOLD. LANDINGS WITH DOORS THAT DO NOT SWING OVER THE LANDING OR DOORS OTHER THAN THE REQUIRED EGRESS DOOR MAY HAVE A DIFFERENCE IN ELEVATION OF 7 3/4" MAXIMUM BELOW THE TOP OF THE THRESHOLD (R311.3.1 - C.R.C.)

FLOOR PLAN KEYNOTES:

1ST FLOOR KEYNOTES:

EXTERIOR:

1. MASONRY VENEER EXTERIOR WALL FINISH (SEE EXT. ELEVATIONS)
2. GARAGE CONCRETE FLOOR NOSING
3. BRONZE ANODIZED ALUMINUM ENTRY THRESHOLD
4. 3'-8" X 4'-10" (+/-) CONCRETE FRONT DOOR LANDING W/ BROOM FINISH
5. 3'-0" X 6'-8" CONCRETE LANDING W/ BROOM FINISH
6. 2X6 STUD FRAMED EXTERIOR WALL TYPICAL UNLESS NOTED OTHERWISE
7. 2X4 COMMON UNIT D.F. STUD FRAMED FIRE WALL - SEE FRAMING DETAILS
8. CANTILEVERED FLOOR AT 2ND LEVEL
9. WALL MOUNT ELECTRIC PANEL W/ U-FER GROUND AND MAIN POWER SWITCH
9A. EXTERIOR WINDOW COMMON WALL LINE
9B. DECK MOUNT AIR-CONDITIONER LOCATION
9C. PRE-FABRICATED LIGHT WEIGHT CONCRETE A.C. PAD

GARAGE:

10. WATER HEATER SET W/ SIESMIC TRAPS TOP AND BOTTOM
11. ELECTRICAL SUB-PANEL LOCATION (VERIFY AT JOB SITE)
12. BRONZE ANODIZED ALUMINUM DOOR THRESHOLD
13. 2'-0" X 3'-4" CONCRETE LANDING W/ BROOM FINISH
13A. TRASH BIN LOCATION
13B. WATER HEATER BASE W/ 26GA. G.I. CAP AND FLASHING
13C. 4" DIA. COLLISION COLUMN FILL WITH CONCRETE [OPTIONAL]

STAIRCASE:

14. STAIR HANDRAIL SET 36" ABOVE COMMON STAIR TREAD NOSING
15. STAIR ASSEMBLY TO 2ND FLOOR [10" RUN W/ 7.333" RISER]
16. ENTRY CLOSET [BELOW STAIRS] POLE AND SHELF ASSEMBLY

POWDER ROOM [P.R.M.]:

17. FREE STANDING PEDISTAL SINK LOCATION
18. WALL MOUNT MIRROR LOCATION
19. DECK MOUNT TOILET W/ MAX. 1.28 GAL. FLUSH CAPACITY
20. WALL MOUNT TOWEL RING
21. WALL MOUNT TOILET PAPER DISPENSER LOCATION
22. 2X4 STUD WALL W/ INSULATION
22A. 2X6 STUD FRAMED PLUMBING WALL

KITCHEN:

23. 8' WIDE HOOD VENT SOFFIT SET 9'-0" ABOVE COMMON FINISH FLOOR
24. SINGLE COMPARTMENT KITCHEN W/ DISPOSAL UNIT
25. DISHWASHER LOCATION
26. 4 BURNER ELECTRIC RANGE W/ SELF-CLEANING OVEN BELOW
27. OVERHEAD RANGE HOOD W/ FAN, LIGHT AND MICRO-WAVE OVEN
28. REFRIGERATOR AND FREEZER LOCATION
29. 3'-0" WIDE, FULL HEIGHT WALL PANTRY AND STORAGE CABINET
30. LOWER KITCHEN CABINET ASSEMBLY
31. UPPER KITCHEN CABINET ASSEMBLY
32. 8' WIDE RANGE HOOD DUCT CHASE SOFFIT

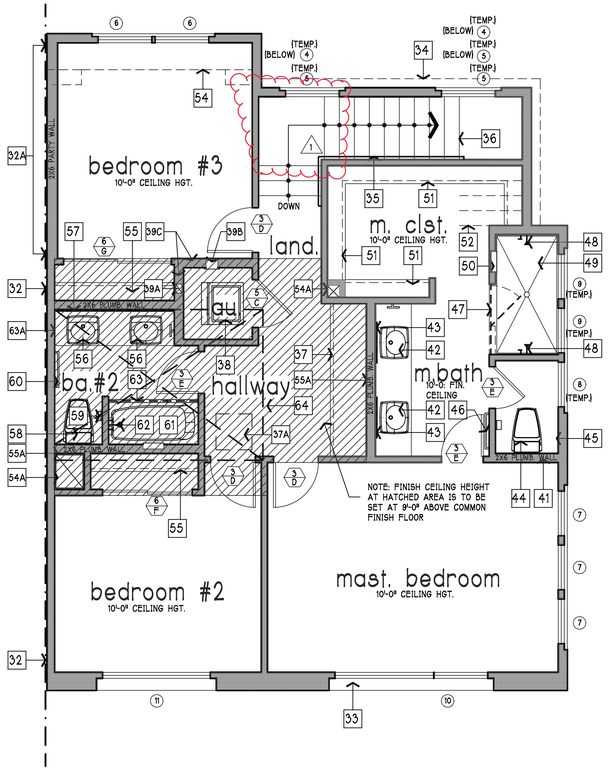

2nd level floor plan

886.000 SQUARE FEET

FLOOR PLAN KEYNOTES:

2ND FLOOR KEYNOTES:

2ND FLOOR EXTERIOR:

32. 2X4 COMMON UNIT D.F. STUD FRAMED FIRE WALL - SEE FRAMING DETAILS
32A. 2X6 COMMON UNIT D.F. STUD FRAMED FIRE WALL - SEE FRAMING DETAILS
33. EXTERIOR WINDOW COMMON WALL LINE
34. 1ST FLOOR MASONRY VENEER PROFILE LINE BELOW

STAIR CASE & LANDING:

35. WALL MOUNT STAIR HANDRAIL SET 36" ABOVE COMMON STAIR TREAD NOSING
36. STAIR CASE ASSEMBLY TO 1ST FLOOR BELOW [10" RUN W/ 7.333" RISER] [TYPICAL]

HALLWAY:

37. UPPER AND LOWER LINEN CABINET ASSEMBLY
37A. 24" X 30" ATTIC ACCESS PANEL LOCATION

LAUNDRY CLOSET:

38. STACKED CLOTHES WASHER AND DRYER LOCATION
39. THIS NUMBER NOT USED
39A. DRYER VENTING DUCT TO ROOF
39B. RECESSED WALL MOUNT HOT & COLD WATER HOOK UP LOCATION
39C. 2X6 STUD FRAMED PLUMBING WALL

MASTER BEDROOM:

40. 9'-0" CEILING SOFFIT LINE
41. 2X6 FRAMED PLUMBING WALL

MASTER BATHROOM:

42. BATHROOM SINK LOCATION
43. WALL MOUNT MIRROR
44. DECK MOUNT TOILET W/ MAX. 1.28 GAL. FLUSH CAPACITY
45. WALL MOUNT TOUILET PAPER DISPENSER LOCATION
46. WALL MOUNT TOWEL BAR
47. TEMPERED GLASS SHOWER DOOR
48. WALL MOUNT SHOWER HEAD AND SHOWER VALVE ASSEMBLY
49. 3'-6" X 6'-6" TILE SHOWER W/ NON-SLIP SURFACED SHOWER PAN
50. SOAP AND SHAMPOO WALL NICHE

MASTER BEDROOM CLOSET:

51. CLOSET POLE AND SHELF ASSEMBLY
52. STAIR ASSEMBLY BELOW

BEDROOM #2&#3:

53. 9'-0" CEILING SOFFIT LINE
54. 1ST FLOOR GARAGE WALL ASSEMBLY
54A. HVAC CHASE FROM ROOF MOUNT AIR HANDLER

BEDROOM #2 & #3 CLOSETS:

55. CLOSET POLE AND SHELF ASSEMBLY
55A. 2X6 STUD FRAMED PLUMBING WALL

BATHROOM #2:

56. BATHROOM SINK LOCATION
57. WALL MOUNT MIRROR
58. DECK MOUNT TOILET W/ MAX. 1.28 GAL. FLUSH CAPACITY
59. WALL MOUNT TOILET PAPER DISPENSER LOCATION
60. WALL MOUNT TOWEL BAR
61. 2'-6" X 5'-0" ENAMEL CAST IRON TUB W/ SHOWER
62. WALL MOUNT TUB FILLER AND SHOWER HEAD ASSEMBLY
63. SHOWER CURTAIN ROD
63A. WALL MOUNT TOWEL RING
64. HORIZONTAL ATTIC MOUNT HVAC THIS LOCATION

FLOOR PLAN "A" (notes and tags only)

SCALE: 1/4" = 1'-0"

1ST FLOOR LIVING AREA:	632.100 SQUARE FEET
2ND FLOOR LIVING AREA:	992.200 SQUARE FEET
TOTAL LIVING AREA:	1,624.300 SQUARE FEET
GARAGE AREA:	278.600 SQUARE FEET

THESE DRAWINGS ARE THE PROPERTY OF OSITO HOLDINGS, LLC AND ARE INTENDED FOR USE SOLELY ON THE PROJECT TITLED HEREON. THESE DRAWINGS AS PROTECTED UNDER COPYRIGHT LAWS ARE NOT TO BE REPRODUCED IN WHOLE OR PART IN ANY MANNER WITHOUT THE EXPRESSED WRITTEN CONSENT OF THE DESIGNER. USE OF THESE DRAWINGS IS LIMITED TO THE SITE INTENDED AND THEIR USE AT ANY OTHER SITE, OR ON OTHER PROJECTS IS PROHIBITED EXCEPT BY PRIOR WRITTEN CONSENT OF THE DESIGNER. ALL REPRODUCTINS OF THESE DRAWINGS, IN WHOLE OR PART, REMAIN UNDER THE OWNERSHIP OF THE DESIGNER AND SHALL BE RETURNED UPON COMPLETION OF THE PROJECT OR UPON REQUEST OF THE DESIGNER.

COPYRIGHT © 2020

OWNER / DEVELOPER:

OSITO HOLDINGS, LLC
P.O. BOX 2827
MESA, AZ 85214
(480) 646.6323

PROJECT:

TENNANT SQUARE
215 TENNANT AVENUE
MORGAN HILL, CA.
COUNTY OF
SANTA CLARA

DRAWING:

FLOOR PLAN "A" - (notes & tags only)

LICENSED ARCHITECT
ZUISHUANG CHEN
NO. C-28156
REN. 5/31/25
STATE OF CALIFORNIA

REVISIONS:
⚠ 02.20.2025 PLAN CHECK RESPONSE

DATE: JUNE 03, 2024
SCALE: AS NOTED
DRAWN BY: G.E.MOORE
PROJ. MGR. G.E.MOORE
PROJECT FILE: 0.20-TENNANT
DRAWING: B2-A.1

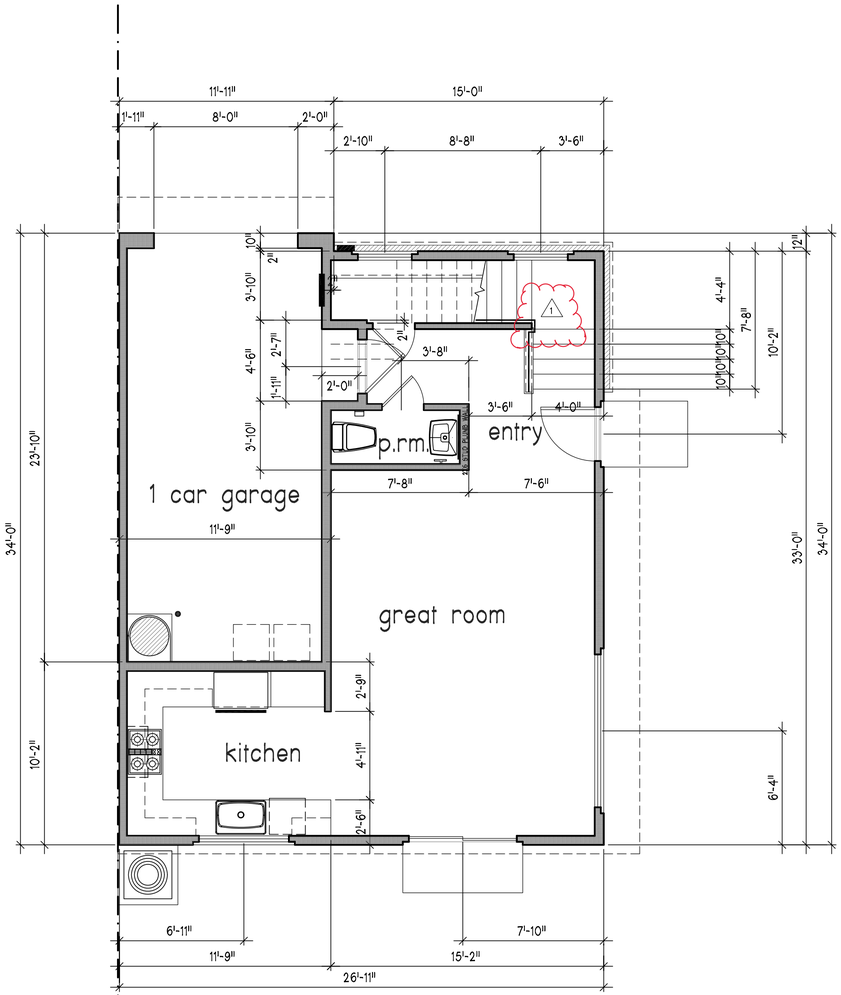

1st level floor plan

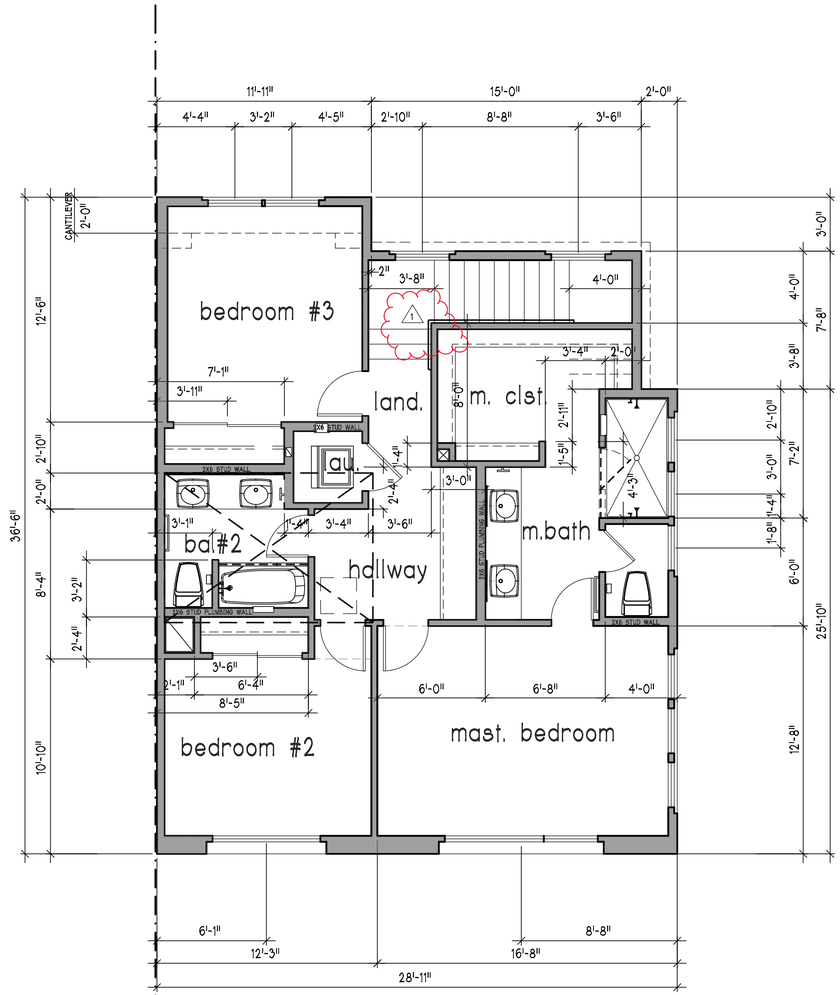

2nd level floor plan

FLOOR PLAN UNIT "A" (dimensions only)

SCALE: 1/4" = 1'-0"

THESE DRAWINGS ARE THE PROPERTY OF OSITO HOLDINGS, LLC AND ARE INTENDED FOR USE SOLELY ON THE PROJECT TITLED HEREON. THESE DRAWINGS AS PROTECTED UNDER COPYRIGHT LAWS ARE NOT TO BE REPRODUCED IN WHOLE OR PART IN ANY MANNER WITHOUT THE EXPRESSED WRITTEN CONSENT OF THE DESIGNER. USE OF THESE DRAWINGS IS LIMITED TO THE SITE INTENDED AND THEIR USE AT ANY OTHER SITE, OR ON OTHER PROJECTS IS PROHIBITED EXCEPT BY PRIOR WRITTEN CONSENT OF THE DESIGNER. ALL REPRODUCTINS OF THESE DRAWINGS, IN WHOLE OR PART, REMAIN UNDER THE OWNERSHIP OF THE DESIGNER AND SHALL BE RETURNED UPON COMPLETION OF THE PROJECT OR UPON REQUEST OF THE DESIGNER.

COPYRIGHT © 2020

OWNER / DEVELOPER:

OSITO HOLDINGS, LLC
P.O. BOX 2827
MESA, AZ 85214
(480) 646.6323

PROJECT:

TENNANT SQUARE
215 TENNANT AVENUE
MORGAN HILL, CA.
COUNTY OF
SANTA CLARA

DRAWING:

FLOOR PLAN UNIT "A" – (dimensions only)

LICENSED ARCHITECT
ZUISHUANG CHEN
NO. C-28156
REN. 5/31/25
STATE OF CALIFORNIA

REVISIONS:
1 02.20.2025 PLAN CHECK RESPONSE

DATE: JUNE 03, 2024
SCALE: AS NOTED
DRAWN BY: G.E.MOORE
PROJ. MGR. G.E.MOORE
PROJECT FILE: 0.20-TENNANT
DRAWING: B2-A11

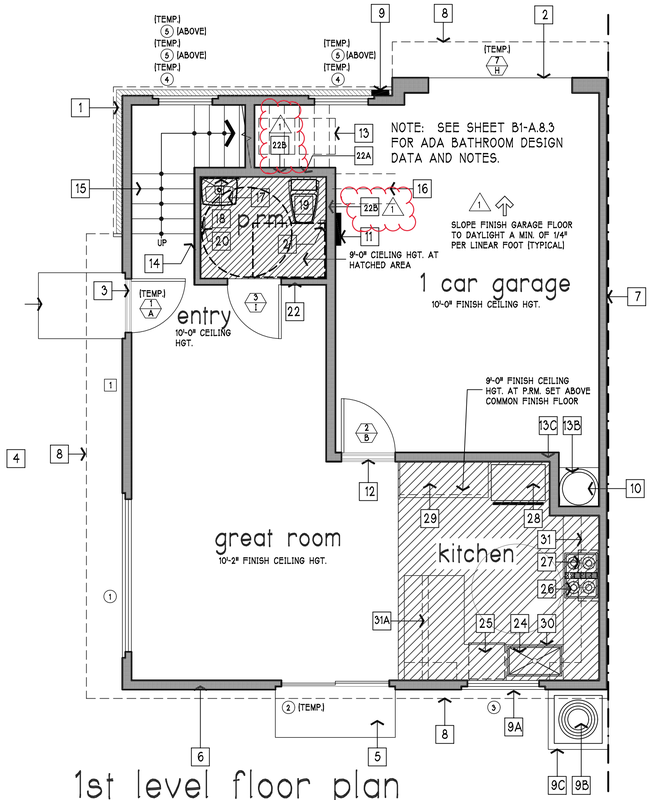

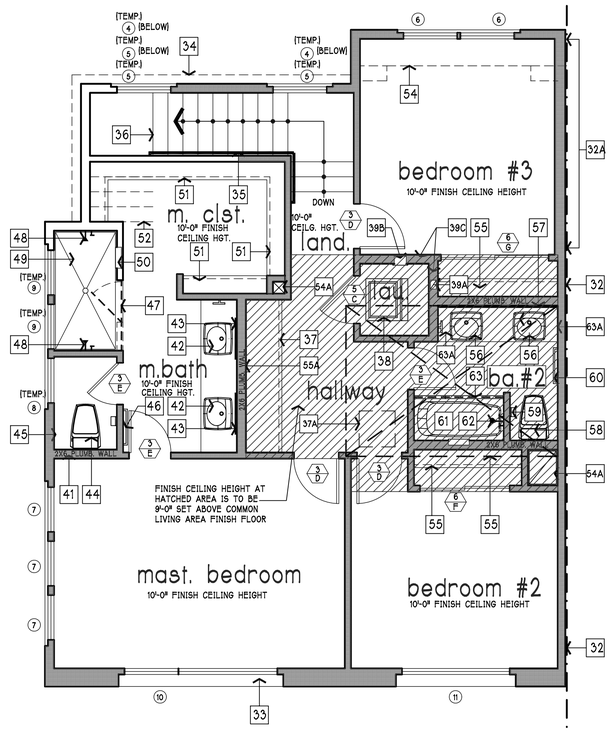

FLOOR PLAN KEYNOTES:

1ST FLOOR KEYNOTES:

EXTERIOR:

1 MASONRY VENEER EXTERIOR WALL FINISH (SEE EXT. ELEVATIONS)
2 GARAGE CONCRETE FLOOR NOSING
3 BRONZE ANODIZED ALUMINUM ENTRY THRESHOLD
4 3'-8" X 4'-10" (+/-) CONCRETE FRONT DOOR LANDING W/ BROOM FINISH
5 3'-0" X 6'-8" CONCRETE LANDING W/ BROOM FINISH
6 2X6 STUD FRAMED EXTERIOR WALL TYPICAL UNLESS NOTED OTHERWISE
7 2X4 COMMON UNIT D.F. STUD FRAMED FIRE WALL - SEE FRAMING DETAILS
8 CANTILEVERED FLOOR AT 2ND LEVEL
9 WALL MOUNT ELECTRIC PANEL W/ U-FER GROUND AND MAIN POWER SWITCH
9A EXTERIOR WINDOW COMMON WALL LINE
9B DECK MOUNT AIR-CONDITIONER LOCATION
9C PRE-FABRICATED LIGHT WEIGHT CONCRETE A/C. PAD

GARAGE:

10 WATER HEATER SET W/ SIESMIC TRAPS TOP AND BOTTOM
11 ELECTRICAL SUB-PANEL LOCATION (VERIFY AT JOB SITE)
12 BRONZE ANODIZED ALUMINUM DOOR THRESHOLD
13 TRASH BIN LOCATION
13A WATER HEATER BASE W/ 26GA. G.I. CAP AND FLASHING

STAIRCASE:

14 STAIR HANDRAIL SET 36" ABOVE COMMON STAIR TREAD NOSING
15 STAIR ASSEMBLY TO 2ND FLOOR (10" RUN W/ 7.333" RISER)
16 STAIR ASSEMBLY ABOVE GARAGE AREA

POWDER ROOM (P.R.M.):

17 FREE STANDING PEDISTAL SINK LOCATION
18 WALL MOUNT MIRROR LOCATION
19 DECK MOUNT TOILET W/ MAX. 1.28 GAL. FLUSH CAPACITY
20 WALL MOUNT TOWEL RING
21 WALL MOUNT TOILET PAPER DISPENSER LOCATION
22 2X4 STUD WALL W/ INSULATION
22A 2X6 STUD FRAMED PLUMBING WALL
22B INSTALL SOLID BLOCKING AS REQUIRED FOR FUTURE WALL MOUNT GRAB BARS (SEE DETAIL SHEET "A8.3")

KITCHEN:

23 8" WIDE HOOD VENT SOFFIT SET 9'-0" ABOVE COMMON FINISH FLOOR
24 SINGLE COMPARTMENT KITCHEN W/ DISPOSAL UNIT
25 DISHWASHER LOCATION
26 4 BURNER ELECTRIC RANGE W/ SELF-CLEANING OVEN BELOW
27 OVERHEAD RANGE HOOD W/ FAN, LIGHT AND MICRO-WAVE OVEN
28 REFRIGERATOR AND FREEZER LOCATION
29 3'-0" WIDE, FULL HEIGHT WALL PANTRY AND STORAGE CABINET
30 LOWER KITCHEN CABINET ASSEMBLY W/ 2 PORTABLE CUTTING AND FOOD PREPARTION BOARDS IN CONFORMANCE W/ ADA REGULATIONS AND DESIGN STANDARDS
31 UPPER KITCHEN CABINET ASSEMBLY
31A 4" THK. HALF COUNTER WALL BELOW

FLOOR PLAN KEYNOTES:

2ND FLOOR KEYNOTES:

2ND FLOOR EXTERIOR:

32 2X4 COMMON UNIT D.F. STUD FRAMED FIRE WALL - SEE FRAMING DETAILS
32A 2X6 COMMON UNIT D.F. STUD FRAMED FIRE WALL - SEE FRAMING DETAILS
33 EXTERIOR WINDOW COMMON WALL LINE
34 1ST FLOOR MASONRY VENEER PROFILE LINE BELOW

STAIR CASE & LANDING:

35 WALL MOUNT STAIR HANDRAIL SET 36" ABOVE COMMON STAIR TREAD NOSING
36 STAIR CASE ASSEMBLY TO 1ST FLOOR BELOW (10" RUN W/ 7.333" RISER) [TYPICAL]

HALLWAY:

37 UPPER AND LOWER LINEN CABINET ASSEMBLY
37A 24" X 30" ATTIC ACCESS PANEL LOCATION

LAUNDRY CLOSET:

38 STACKED CLOTHES WASHER AND DRYER LOCATION
39 THIS NUMBER NOT USED
39A DRYER VENTING DUCT TO ROOF
39B RECESSED WALL MOUNT HOT & COLD WATER HOOK UP LOCATION
39C 2X6 STUD FRAMED PLUMBING WALL

MASTER BEDROOM:

40 9'-0" CEILING SOFFIT LINE
41 2X6 FRAMED PLUMBING WALL

MASTER BATHROOM:

42 BATHROOM SINK LOCATION
43 WALL MOUNT MIRROR
44 DECK MOUNT TOILET W/ MAX. 1.28 GAL. FLUSH CAPACITY
45 WALL MOUNT TOUILET PAPER DISPENSER LOCATION
46 WALL MOUNT TOWEL BAR
47 TEMPERED GLASS SHOWER DOOR
48 WALL MOUNT SHOWER HEAD AND SHOWER VALVE ASSEMBLY
49 3'-6" X 6'-6" TILE SHOWER W/ NON-SLIP SURFACED SHOWER PAN
50 SOAP AND SHAMPOO WALL NICHE

MASTER BEDROOM CLOSET:

51 CLOSET POLE AND SHELF ASSEMBLY
52 STAIR ASSEMBLY BELOW

BEDROOM #2 & #3:

53 9'-0" CEILING SOFFIT LINE
54 1ST FLOOR GARAGE WALL ASSEMBLY
54A HVAC CHASE FROM ROOF MOUNT AIR HANDLER

BEDROOM #2 & #3 CLOSETS:

55 CLOSET POLE AND SHELF ASSEMBLY
55A 2X6 STUD FRAMED PLUMBING WALL

BATHROOM #2:

56 BATHROOM SINK LOCATION
57 WALL MOUNT MIRROR
58 DECK MOUNT TOILET W/ MAX. 1.28 GAL. FLUSH CAPACITY
59 WALL MOUNT TOILET PAPER DISPENSER LOCATION
60 WALL MOUNT TOWEL BAR
61 2'-6" X 5'-0" ENAMEL CAST IRON TUB W/ SHOWER
62 WALL MOUNT TUB FILLER AND SHOWER HEAD ASSEMBLY
63 SHOWER CURTAIN ROD
63A WALL MOUNT TOWEL RING
64 HORIZONTAL ATTIC MOUNT HVAC THIS LOCATION

⚠1 NOTE: LANDINGS AT THE REQUIRED EGRESS DOOR SHALL NOT BE MORE THAN 1 1/2" LOWER THAN THE TOP OF THE THRESHOLD. LANDINGS WITH DOORS THAT DO NOT SWING OVER THE LANDING OR DOORS OTHER THAN THE REQUIRED EGRESS DOOR MAY HAVE A DIFFERENCE IN ELEVATION OF 7 3/4" MAXIMUM BELOW THE TOP OF THE THRESHOLD (R311.3.1 - C.R.C.)

⚠1 NOTE: THRESHOLDS AT THE PRIMARY ENTRY AND REQUIRED EXIT DOORS SHALL BE NO HIGHER THAN 1/2 INCH. THRESHOLDS AT SECONDARY EXTERIOR DOORS, INCLUDING SLIDING DOOR TRACKS, SHALL BE NO HIGHER THAN 3/4 INCH. CHANGES IN HEIGHT AT INTERIOR DOOR THRESHOLDS (E.G., FLOOR MATERIAL CHANGES AT DOOR THRESHOLDS) SHALL NOT EXCEED 1/2 INCH. THRESHOLDS SHALL COMPLY WITH THE FOLLOWING PER C.B.C 1132A.4.1:
A. THRESHOLDS WITH A CHANGE IN HEIGHT OF NOT MORE THAN 1/4 INCH (6.35mm) MAY BE VERTICAL.
B. THRESHOLDS WITH A CHANGE IN HEIGHT BETWEEN 1/4 INCH (6.35mm) AND 3/4 INCH (19.05mm) SHALL BE BEVELED WITH A SLOPE NO GREATER THAN 1 UNIT VERTICAL IN 2 UNITS HORIZONTAL (50-PERCENT SLOPE).

⚠2 NOTE: A.D.A. KITCHEN CABINET COMPLIANT DESIGN DATA:
CLEAR FLOOR OR GROUND SPACE: (804.3.1)
A CLEAR FLOOR SPACE COMPLYING WITH 305 POSITIONED FOR A FORWARD APPROACH SHALL BE PROVIDED. THE CLEAR FLOOR OR GROUND SPACE SHALL BE CENTERED ON THE KITCHEN WORK SURFACE AND SHALL PROVIDE KNEE AND TOE CLEARANCE COMPLYING WITH 306.
EXCEPTIONS:
CABINETRY SHALL BE PERMITTED UNDER THE KITCHEN WORK SURFACE PROVIDED THAT ALL OF THE FOLLOWING CONDITIONS ARE MET:
(a) THE CABINETRY CAN BE REMOVED WITHOUT REMOVAL OR REPLACEMENT OF THE KITCHEN WORK SURFACE.
(b) THE FINISH FLOOR EXTENDS UNDER THE CABINETRY: AND
(c) THE WALLS BEHIND AND SURROUNDING THE CABINETRY ARE FINISHED.

⚠2 NOTE: A.D.A. KITCHEN CABINET COMPLIANT DESIGN DATA:
CABINET HEIGHT (804.3.2)
THE KITCHEN WORK SURFACE SHALL BE 34 INCHES (865 mm) MAXIMUM ABOVE THE FINISH FLOOR OR GROUND.
EXCEPTION:
A COUNTER THAT IS ADJUSTABLE TO PROVIDE A KITCHEN WORK SURFACE AT VARIABLE HEIGHTS, 29 INCHES (735 mm) MINIMUM AND 36 INCHES (915 mm) MAXIMUM, SHALL BE PERMITTED.

⚠2 NOTE: A.D.A. KITCHEN CABINET COMPLIANT DESIGN DATA:
CABINET EXPOSED SURFACES. (804.3.3)
THERE SHALL BE NO SHARP OR ABRASIVE SURFACES UNDER THE WORK SURFACE COUNTERS.
SINKS. (804.4)
SINKS SHALL COMPLY WITH SECTION 606.
STORAGE. (804.5)
AT LEAST 50 PERCENT OF SHELF SPACE IN STORAGGE FACILITIES SHALL COMPLY WITH SECTION 811.
APPLIANCES. (804.6)
WHERE PROVIDED, KITCHEN APPLIANCES SHALL COMPLY WITH SECTION 804.6.
CLEAR FLOOR OR GROUND SPACE. (804.6.1)
A CLEAR FLOOR OR GROUND SPACED COMPLYING WITH 305 SHALL BE PROVIDED AT EACH KITCHEN APPLIANCE. CLEAR FLOOR OR GROUND SPACES SHALL BE PERMITTED TO OVERLAP.
OPERABLE PARTS. (804.62)
APPLIANCE CONTROLS SHALL COMPLY WITH SECTION 309.
EXCEPTIONS:
1. APPLIANCE DOORS AND DOOR LATCHING DEVICES SHALL NOT BE REQUIRED TO COMPLY WITH SECTION 309.4
2. BOTTOM-HINGED APPLIANCE DOORS, WHEN IN THE OPEN POSITION, SHALL NOT BE REQUIRED TO COMPLY WITH SECTION 309.3

⚠2 NOTE: A.D.A. KITCHEN CABINET COMPLIANT DESIGN DATA:
DISHWASHER. (804.6.3)
CLEAR FLOOR OR GROUND SPACE SHALL BE POSITIONED ADJACENT TO THE DISHWASHER DOOR. THE DISHWASHER DOOR, IN THE OPEN POSITION, SHALL NOT OBSTURCT THE CLEAR FLOOR OR GROUND SPACE FOR THE DISHWASHER OR THE SINK.
RANGE OR COOKTOP. (804.6.4)
WHERE A FORWARD APPROACH IS PROVIDED, THE CLEAR FLOOR OR GROUND SPACE SHALL PROVIDE KNEE AND TOE CLEARANCE COMPLYING WITH 306. WHERE KNEE AND TOE SPACE IS PROVIDED, THE UNDERSIDE OF THE RANGE OR COOKTOP SHALL BE INSULATED OR OTHERWISE CONFIGURED TO PREVENT BURNS, ABRASIONS, OR ELECTRICAL SHOCK. THE LOCATION OF CONTROLS SHALL NOT REQUIRE REACHING ACROSS BURNERS.
OVEN. (804.6.5)
OVENS SHALL COMPLY WITH SECTION 804.6.5.
SIDE-HINGED DOOR OVENS. (804.6.5.1)
SIDE-HINGED DOOR OVENS SHALL HAVE THE WORK SURFACE REQUIRED BY SECTION 804.3.
POSITIONED ADJACENT TO THE LATCH SIDE OF THE OVEN DOOR.
BOTTOM-HINGED DOOR OVENS. (804.6.5.2)
BOTTOM-HINGED DOOR OVENS SHALL HAVE THE WORK SURFACE REQUIRED BY SECTION 804.3.
POSITIONED ADJACENT TO ONE SIDE OF THE DOOR.
CONTGROLS. (804.6.5.3)
OVENS SHALL HAVE CONTROLS ON FRONT PANELS.
REFRIGERATOR / FREEZER. (804.6.6)
CONBINATION REFRIGERATORS AND FREEZERS SHALL HAVE AT LEAST 50 PERCENT OF THE FREEZER SPACE 54 INCHES (1370 mm) MAXIMUM ABVOVE THE FINISH FLOOR OR GROUND. THE CLEAR FLOOR OR GROUND SPACE SHALL ABE POSITIONED FOR A PARALLEL APPROACH TO THE SPACE DEDICATED TO A REFRIGERATOR/FREEZER WITH THE CENTERLINE OF THE CLEAR FLOOR OR GROUND SPACE OFFSET 24 INCHES (610mm) MAXIMUM FROM THE CENTERLINE OF THE DEDICATED SPACE.

FLOOR PLAN "A" - A.D.A. UNIT (notes and tags only)

SCALE: 1/4" = 1'-0"

1ST FLOOR LIVING AREA:	568.100 SQUARE FEET
2ND FLOOR LIVING AREA:	992.200 SQUARE FEET
TOTAL LIVING AREA:	1,561.300 SQUARE FEET
GARAGE AREA:	341.600 SQUARE FEET

THESE DRAWINGS ARE THE PROPERTY OF OSITO HOLDINGS, LLC AND ARE INTENDED FOR USE SOLELY ON THE PROJECT TITLED HEREON. THESE DRAWINGS AS PROTECTED UNDER COPYRIGHT LAWS ARE NOT TO BE REPRODUCED IN WHOLE OR PART IN ANY MANNER WITHOUT THE EXPRESSED WRITTEN CONSENT OF THE DESIGNER. USE OF THESE DRAWINGS IS LIMITED TO THE SITE INTENDED AND THEIR USE AT ANY OTHER SITE, OR ON OTHER PROJECTS IS PROHIBITED EXCEPT BY PRIOR WRITTEN CONSENT OF THE DESIGNER. ALL REPRODUCTINS OF THESE DRAWINGS, IN WHOLE OR PART, REMAIN UNDER THE OWNERSHIP OF THE DESIGNER AND SHALL BE RETURNED UPON COMPLETION OF THE PROJECT OR UPON REQUEST OF THE DESIGNER.
COPYRIGHT © 2020

OWNER / DEVELOPER:
OSITO HOLDINGS, LLC
P.O. BOX 2827
MESA, AZ 85214
(480) 646.6323

PROJECT:
TENNANT SQUARE
215 TENNANT AVENUE
MORGAN HILL, CA.
COUNTY OF
SANTA CLARA

DRAWING:
FLOOR PLAN "A" - ADA - (notes & tags only)

LICENSED ARCHITECT
ZUISHUANG CHEN
NO. C-28156
REN. 5/31/25
STATE OF CALIFORNIA

REVISIONS:
⚠1 02.20.2023 PLAN CHECK RESPONSE
⚠2 02.09.2024 PLAN CHECK RESPONSE

DATE: JUNE 03, 2024
SCALE: AS NOTED
DRAWN BY: G.E.MOORE
PROJ. MGR. G.E.MOORE
PROJECT FILE: 0.20-TENNANT
DRAWING: B2-A2

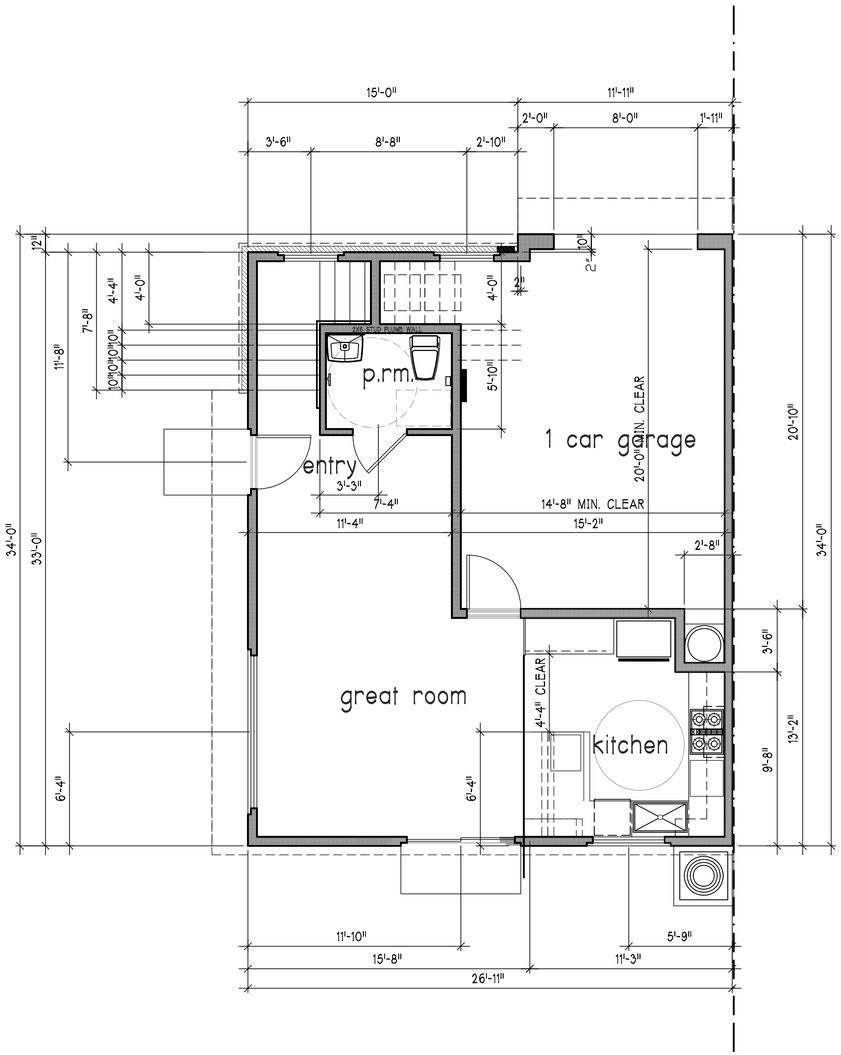

1st level floor plan

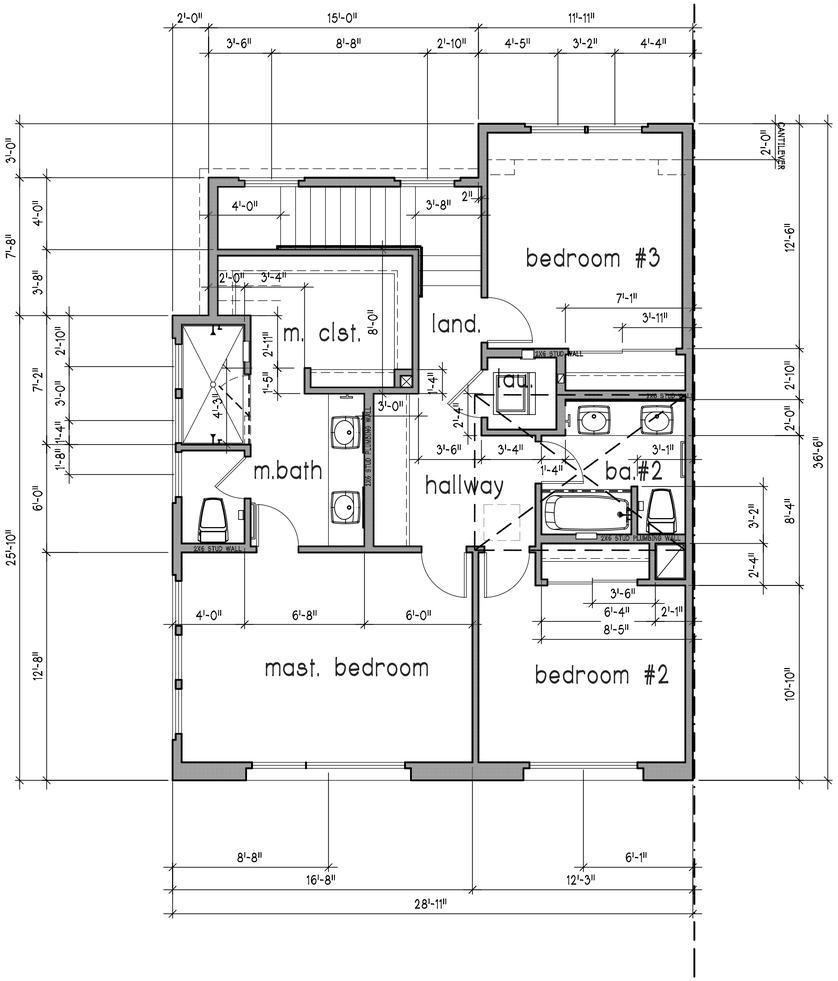

2nd level floor plan

ACCESSIBLE UNIT KITCHEN NOTES:

CLEAR FLOOR SPACE:

- A CLEAR FLOOR SPACE AT LEAST 30 INCHES [762 mm] BY 48 INCHES [1219 mm] THAT ALLOWS A PARALLEL APPROACH BY A PERSON IN A WHEELCHAIR SHALL BE PROVIDED AT THE RANGE OR COOKTOP.
- A CLEAR FLOOR SPACE AT LEAST 30 INCHES [762 mm] BY 48 INCHES [1219 mm] THAT ALLOWS EITHER A PARALLEL OR FORWARD APPROACK SHALL BE PROVIDED AT THE KITCHEN SINK AND ALL OTHER FIXTURES OR APPLIANCES INCLUDING THE OVEN, DISHWASHER, REFRIGERATOR/FREEZER AND TRASH COMPACTOR.
- A CLEAR FLOOR SPACE AT LEAST 30 INCHES [762 mm] BY 48 INCHES [1219 mm] THAT ALLOWS EITHER A PARALLEL OR FORWARD APPROACH SHALL BE PROVIDED AT THE WORK SURFACE REQUIRED BY SECTION 1133A.4.
- THE CENTERLINE OF THE 30-INCH [762 mm] BY 48-INCH [1219 mm] CLEAR FLOOR SPACE PROVIDED FOR PARALLEL OR FORWARD APPROACH SHALL BE ALIGNED WITH THE CENTERLINE OF THE WORK SPACE, APPLIANCE OR FIXTURE.

CLEAR WIDTH:

- U-SHAPED KITCHENS, DESIGNED WITH PARALLEL APPROACH AT A RANGE OR COOKTOP LOCATED AT THE BASE OF THE U, SHALL HAVE A MINIMUM CLEAR WIDTH OF AT LEAST 60 INCHES [1524 mm]. (SEE FIGURE 11AL-10A)
- U-SHAPED KITCHENS, DESIGNED WITH A COOKTOP OR SINK LOCATED AT THE BASE OF THE U, WHICH PROVIDES A KNEE AND TOE SPACE IN ACCORDANCE WITH SECTION 1133A.7 TO ALLOW FOR A FORWARD APPROACH, SHALL HAVE A CLEAR WIDTH OF AT LEAST 48 INCHES [12219 mm]. (SEE FIGURE 11A-10A.)
- ALL OTHER KITCHEN DESIGNS SHALL PROVIDE A MINIMUM CLEAR WIDTH OF AT LEAST 48 INCHES [1219 mm]. (SEE FIGURE 11A-10A.)

REMOVABLE BASE CABINETS:

- SINKS AND WORK SURFACES REQUIRED BY SECTION 1133A.4 (SEE ITEM 1 AND ITEM 2) SHALL BE PROVIDED WITH KNEE AND TOE SPACE COMPLYING WITH SECTION 1133A.7. BASE CABINETS (INCLUDING TOE BOARD AND SHELVING) DIRECTLY UNDER KITCHEN SINKS AND WORK SURFACES SHALL BE REMOVABLE WITHOUT THE USE OF SPECIALIZED TOOLS OR SPECIALIZED KNOWLEDGE IN ORDER TO PROVIDE KNEE AND TOE SPACE. THE FINISH FLOOR BENEATH KITCHEN SINKS AND WORK SURFACES SHALL BE EXTENED TO THE WALL.

COUNTERTOPS:

- A MINIMUM LINEAR LENGTH OF 30 INCHES [762 mm] OF COUNTERTOP SHALL BE PROVIDED FOR THE KITCHEN SINK INSTALLATION.
- A MINIMUM LINEAR LENGTH OF 30 INCHES [762 mm] OF COUNTERTOP SHALL BE PROVIDED FOR A WORK SURFACE.
- SINKS AND WORK SURFACES MAY E A SINGLE INTEGRAL UNIT A MINIMUM OF 60 INCHES [1574 mm] IN LENGTH, OR BE SEPARATE COMPONENTS.
- EXCEPTION: TWO 15-INCH [381 mm] WIDE MINIMUM BREADBOARDS MAY BE PROVIDED IN LIEU OF THE REQUIRED 30 INCHES [762 mm] OF COUNTERTOP WORK SURFACE.

REPOSITIONABLE COUNTERTOPS:

- SINKS AND WORK SURFACES REQUIRED BY SECTION 1133A.4 SHALL BE DESIGNED TO ENABLE REPOSITIONING TO A MINIMUM HFEIGHT OF 28 INCHES [711 mm].
- BASE CABINETS DIRECTLY UNDER SINKS AND WORK SURFACES SHALL BE REMOVABLE AS REQUIRED IN SECTION 1133A.3.
- THE SIDES OF ADJACENT CABINETS AND THE BACK WALL, WHICH MAY BECOME EXPOSED TO MOISTURE OR FOOD HANDLING WHEN A COUNTERTOP IS LOWERED, SHALL BE CONSTRUCTED OF DURABLE, NONABSORBENT MATERIALS APPROPRIATE FOR SUCH USES.
- FINISH FLOORING SHALL BE EXTENDED TO THE WALL BENEATH THE SINK AND WORK SURFACE.
  EXCEPTIONS:
  - STONE, CULTURED STONE AND TILED COUNTERTOPS MAY BE USED WITHOUT MEETING THE REPOSITIONING REQUIREMENTS.
  - TWO 15-INCH [381 mm] WIDE MINIMUM BREADBOARDS MAY BE PROVIDED IN LIEU OF THE REQUIRED 30 INCHES [762 mm] OF COUNTERTOP WORK SURFACE, AND USED WITHOUT MEETING THE REPOSITIONING REQUIREMENTS.

KNEE AND TOE SPACE:

- THE KNEE AND TOE SPACE SHALL BE CLEAR AND UNOBSTRUCTED, OR REMOVABLE BASE CABINETS IN COMPLIANCE WITH SECTION 1133A.3 SHALL BE PROVIDED.
- THE KNEE AND TOE SPACE SHALL BE 30 INCHES [762 mm] WIDE MINIMUM, CENTERED ON THE SINK, COUNTERTOP OR APPLIANCE.
- A CLEAR FLOOR SPACE SHALL NOT EXTEND INTO THE KNEE AND TOE SPACE MORE THAN 19 INCHES [483 mm].

PLUMBING PROTECTIONS:

- WATER SUPPLY AND DRAIN PIPES UNDER KITCHEN SINKS SHALL BE INSTALLED OR OTHERWISE COVERED TO PROTECT AGAINST CONTACT. THERE SHALL BE NO SHAP OR ABRASIVE SURFACES UNDER KITCHEN SINKS.

FLOOR PLAN UNIT "A" - A.D.A. UNIT (dimensions only)

SCALE: 1/4" = 1'-0"

THESE DRAWINGS ARE THE PROPERTY OF OSITO HOLDINGS, LLC AND ARE INTENDED FOR USE SOLELY ON THE PROJECT TITLED HEREON. THESE DRAWINGS AS PROTECTED UNDER COPYRIGHT LAWS ARE NOT TO BE REPRODUCED IN WHOLE OR PART IN ANY MANNER WITHOUT THE EXPRESSED WRITTEN CONSENT OF THE DESIGNER. USE OF THESE DRAWINGS IS LIMITED TO THE SITE INTENDED AND THEIR USE AT ANY OTHER SITE, OR ON OTHER PROJECTS IS PROHIBITED EXCEPT BY PRIOR WRITTEN CONSENT OF THE DESIGNER. ALL REPRODUCTINS OF THESE DRAWINGS, IN WHOLE OR PART, REMAIN UNDER THE OWNERSHIP OF THE DESIGNER AND SHALL BE RETURNED UPON COMPLETION OF THE PROJECT OR UPON REQUEST OF THE DESIGNER.

COPYRIGHT © 2020

OWNER / DEVELOPER:

OSITO HOLDINGS, LLC
P.O. BOX 2827
MESA, AZ 85214
(480) 646.6323

PROJECT:

TENNANT SQUARE
215 TENNANT AVENUE
MORGAN HILL, CA.
COUNTY OF
SANTA CLARA

DRAWING:

FLOOR PLAN UNIT "A" - ADA - (dims. only)

LICENSED ARCHITECT
ZUISHUANG CHEN
NO. C-28156
REN. 5/31/25
STATE OF CALIFORNIA

REVISIONS:
2 02.09.2024 PLAN CHECK RESPONSE

DATE: JUNE 03, 2024
SCALE: AS NOTED
DRAWN BY: G.E.MOORE
PROJ. MGR. G.E.MOORE
PROJECT FILE: 0.20-TENNANT
DRAWING: B2-A21

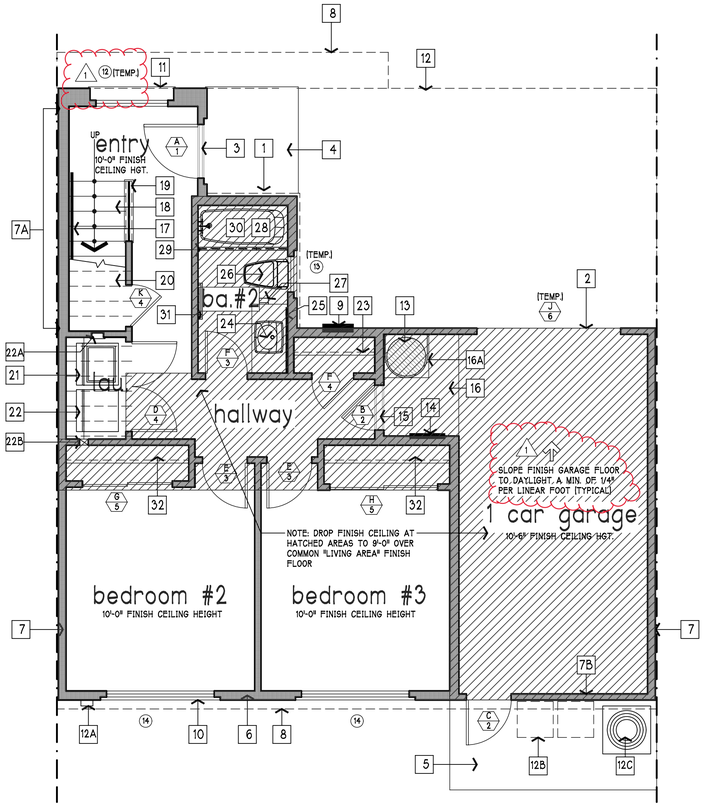

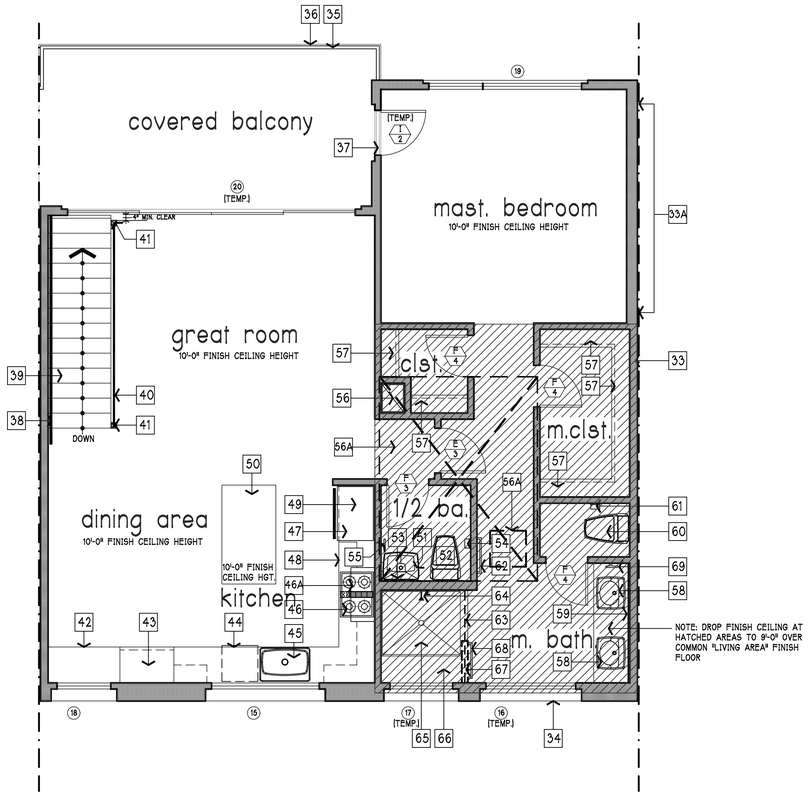

1ST LEVEL FLOOR PLAN

FLOOR PLAN KEYNOTES:

1ST FLOOR KEYNOTES:

EXTERIOR:

1. MASONRY VENEER EXTERIOR WALL FINISH (SEE EXT. ELEVATIONS)
2. GARAGE CONCRETE FLOOR NOSING
3. BRONZE ANODIZED ALUMINUM ENTRY THRESHOLD
4. 5'-0" X 6'-0" CONCRETE FRONT DOOR LANDING W/ BROOM FINISH
5. 11'-6" X 5'-0" CONCRETE SERVICE LANDING W/ NON-SLIP BROOM FINISH
6. 2X6 STUD FRAMED EXTERIOR WALL TYPICAL UNLESS NOTED OTHERWISE
7. 2X4 COMMON UNIT D.F. STUD FRAMED FIRE WALL - SEE FRAMING DETAILS
7A. 2X6 COMMON UNIT D.F. STUD FRAMED FIRE WALL - SEE FRAMING DETAILS (2X4 WALL WHERE ADJACENT TO FLOOR PLAN "A"-ADA UNIT)
7B. 2X4 COMMON UNIT D.F. STUD FRAMED
8. CANTILEVERED FLOOR AT 2ND LEVEL
9. WALL MOUNT POWER PANEL W/ U-FER GROUND AND MAIN POWER SWITCH
10. EXTERIOR WINDOW COMMON WALL LINE
11. WINDOW WALL SHELF LINE (CEMENT PLASTER FINISH)
12. UPPER LEVEL EXTERIOR WALL LINE
12A. DRYER EXHAUST VENT / DUCT LOCATION
12B. TRASH RECEPTICAL STORAGE LOCATION
12C. AIR-CONDITIONER LOCATION

GARAGE:

13. WATER HEATER SET W/ SIESMIC TRAPS TOP AND BOTTOM
14. ELECTRICAL SUB-PANEL LOCATION (VERIFY AT JOB SITE)
15. BRONZE ANODIZED ALUMINUM DOOR THRESHOLD
16. 4'-2" X 5'-9" CONCRETE LANDING W/ BROOM FINISH
16A. 18" HIGH WATER HEATER PLATFORM W/ 26GA. G.I. CAP AND FLASHING

ENTRY & STAIRCASE:

17. STAIR HANDRAIL SET 36" ABOVE COMMON STAIR TREAD NOSING
18. STAIR ASSEMBLY TO 2ND FLOOR (10" RUN W/ 7.333" RISER)
19. RAISED STAIR CURB W/ METAL STAIR HANDRAIL ASSEMBLY
20. STAIR CASE FRAMING ABOVE

LAUNDRY CLOSET:

21. CLOTHES WASHING MACHINE LOCATION
22. CLOTHES DRYER LOCATION
22A. RECESSED IN WALL LAUNDRY WATER CONNECTION BOX
22B. DRYER VENT CONNECTION LOCATION

HALLWAY ENTRY CLOSET:

23. CLOSET SHELF AND POLE ASSEMBLY W/ METAL SHELF TO WALL BRACKET

BATHROOM #2:

24. BATHROOM SINK LOCATION
25. WALL MOUNT MIRROR LOCATION
26. DECK MOUNT TOILET W/ MAX. 1.28 GAL. FLUSH CAPACITY
27. WALL MOUNT TOILET PAPER DISPENSER LOCATION
28. 30" X 60" ENAMEL CAST IRON TUB W/ SHOWER
29. SHOWER CURTAIN ROD LOCATION
30. WALL MOUNT SHOWER HEAD, TUB FILLER AND HANDLE ASSEMBLY LOCATION
31. WALL MOUNT TOWEL BAR LOCATION

BEDROOMS #2 & #3 CLOSETS:

32. CLOSET POLE AND SHELF ASSEMBLY W/ METAL SHELF SUPPORTING BRACKETS

2ND LEVEL FLOOR PLAN

FLOOR PLAN KEYNOTES:

2ND FLOOR KEYNOTES:

2ND FLOOR EXTERIOR:

33. 2X4 COMMON UNIT D.F. STUD FRAMED FIRE WALL - SEE FRAMING DETAILS
33A. 2X6 COMMON UNIT D.F. STUD FRAMED FIRE WALL - SEE FRAMING DETAILS (2X4 WALL WHERE ADJACENT TO FLOOR PLAN "A" UNIT)
34. EXTERIOR WINDOW COMMON WALL LINE
35. 42" HIGH DECK RAILING SET ABOVE COMMON FINISH FLOOR W/ VERTICAL RAILS SET IN SUCH A MANNER SO AS TO PREVENT THE PASSAGE OF A 4" DIA. SPHERE.
36. DECK NOSING
37. BRONZE ANODIZED ALUMINUM DOOR THRESHOLD

STAIR CASE & LANDING:

38. WALL MOUNT STAIR HANDRAIL SET 36" ABOVE COMMON STAIR TREAD NOSING
39. STAIR CASE ASSEMBLY TO 1ST FLOOR BELOW (10" RUN W/ 7.333" RISER) [TYPICAL]
40. 42" HIGH HANDRAIL W/ VERTICAL RAILS SET IN SUCH A MANNER SO AS TO PREVENT THE PASSAGE OF A 4" DIA. SPHERE
41. METAL STAIR RAILING END POST

KITCHEN & DINING ROOM:

42. 30" WIDE HOME CENTER DESK W/ LOWER CABINET STORAGE
43. 3'-0" LEFT TO RIGHT KITCHEN FOOD PANTRY LOCATION
44. DISHWASHER LOCATION
45. SINGLE COMPARTMENT KITCHEN SINK W/ DISPOSAL UNIT (CONTINUOUS FEED)
46. 4 BURNER RANGE TOP W/ SELF-CLEANING CONVECTION OVEN BELOW
46A. RANGE HOOD LOCATION W/ FAN, LIGHT AND MICRO-WAVE OVEN
47. REFRIGERATOR / FREEZER LOCATION ROUGH PLUMB FOR ICE & WATER DISPENSER
48. LOWER CABINET ASSEMBLY
49. UPPER CABINET ASSEMBLY
50. 3'-0" X 5'-6" KITCHEN ISLAND

1/2 BATH:

51. PEDISTAL SINK LOCATION
52. DECK MOUNT TOILET W/ MAX. FLUSH CAPACITY OF 1.28 GALLONS
53. WALL MOUNT MIRROR
54. WALL MOUNT TOILET PAPER DISPENSER LOCATION
55. WALL MOUNT TOWEL RING LOCATION
55A. HORIZONTAL ATTIC MOUNT HVAC THIS LOCATION

GREAT ROOM:

56. HVAC DUCT CHASE LOCATION - CHASE IS TO BE FRAMED AFTER MECHANICAL DUCT INSTALLATION.
56A. 24" X 30" ATTIC ACCESS PANEL LOCATION

MASTER BEDROOM CLOSETS:

57. CLOSET POLE & SHELF ASSEMBLY W/ METAL SHELF BRACKETS AS REQUIRED

MASTER BATHROOM:

58. BATHROOM SINK LOCATION
59. WALL MOUNT MIRROR
60. DECK MOUNT TOILET W/ MAX. 1.28 GAL. FLUSH CAPACITY
61. WALL MOUNT TOUILET PAPER DISPENSER LOCATION
62. WALL MOUNT TOWEL BAR
63. TEMPERED GLASS SHOWER DOOR
64. WALL MOUNT SHOWER HEAD AND SHOWER VALVE ASSEMBLY
65. 4'-10" X 5'-2" TILE SHOWER W/ NON-SLIP SURFACED SHOWER PAN (SIZE OF SHOWER INCLUDES SHR. BENCH)
66. 18" HIGH SHOWER BENCH W/ TILE FINISH
67. 60" HIGH SHOWER WALL W/ TILE CAP AND TRIM
68. WALL MOUNT TOWEL BAR LOCATION
69. WALL MOUNT TOWEL RING LOCATION

FLOOR PLAN "B"

(notes & tags only)

SCALE: 1/4" = 1'-0"

1ST FLOOR LIVING AREA:	588.600 SQUARE FEET
2ND FLOOR LIVING AREA:	1,003.800 SQUARE FEET
TOTAL LIVING AREA:	1,592.400 SQUARE FEET
GARAGE AREA:	252.300 SQUARE FEET
DECK AREA:	167.500 SQUARE FEET

⚠1 NOTE: LANDINGS AT THE REQUIRED EGRESS DOOR SHALL NOT BE MORE THAN 1 1/2" LOWER THAN THE TOP OF THE THRESHOLD. LANDINGS WITH DOORS THAT DO NOT SWING OVER THE LANDING OR DOORS OTHER THAN THE REQUIRED EGRESS DOOR MAY HAVE A DIFFERENCE IN ELEVATION OF 7 3/4" MAXIMUM BELOW THE TOP OF THE THRESHOLD [R311.3.1 - C.R.C.]

THESE DRAWINGS ARE THE PROPERTY OF OSITO HOLDINGS, LLC AND ARE INTENDED FOR USE SOLELY ON THE PROJECT TITLED HEREON. THESE DRAWINGS AS PROTECTED UNDER COPYRIGHT LAWS ARE NOT TO BE REPRODUCED IN WHOLE OR PART IN ANY MANNER WITHOUT THE EXPRESSED WRITTEN CONSENT OF THE DESIGNER. USE OF THESE DRAWINGS IS LIMITED TO THE SITE INTENDED AND THEIR USE AT ANY OTHER SITE, OR ON OTHER PROJECTS IS PROHIBITED EXCEPT BY PRIOR WRITTEN CONSENT OF THE DESIGNER. ALL REPRODUCTINS OF THESE DRAWINGS, IN WHOLE OR PART, REMAIN UNDER THE OWNERSHIP OF THE DESIGNER AND SHALL BE RETURNED UPON COMPLETION OF THE PROJECT OR UPON REQUEST OF THE DESIGNER.

COPYRIGHT © 2020

OWNER / DEVELOPER:

OSITO HOLDINGS, LLC
P.O. BOX 2827
MESA, AZ 85214
(480) 646.6323

PROJECT:

TENNANT SQUARE
215 TENNANT AVENUE
MORGAN HILL, CA.
COUNTY OF
SANTA CLARA

DRAWING:

FLOOR PLAN "B" (notes & tags only)

LICENSED ARCHITECT
ZUISHUANG CHEN
NO. C-28158
REN. 5/31/25
STATE OF CALIFORNIA

REVISIONS:
⚠1 02.20.2025 PLAN CHECK RESPONSE

DATE: JUNE 03, 2024
SCALE: AS NOTED
DRAWN BY: G.E.MOORE
PROJ. MGR. G.E.MOORE
PROJECT FILE: 0.20-TENNANT
DRAWING: B2-A.3

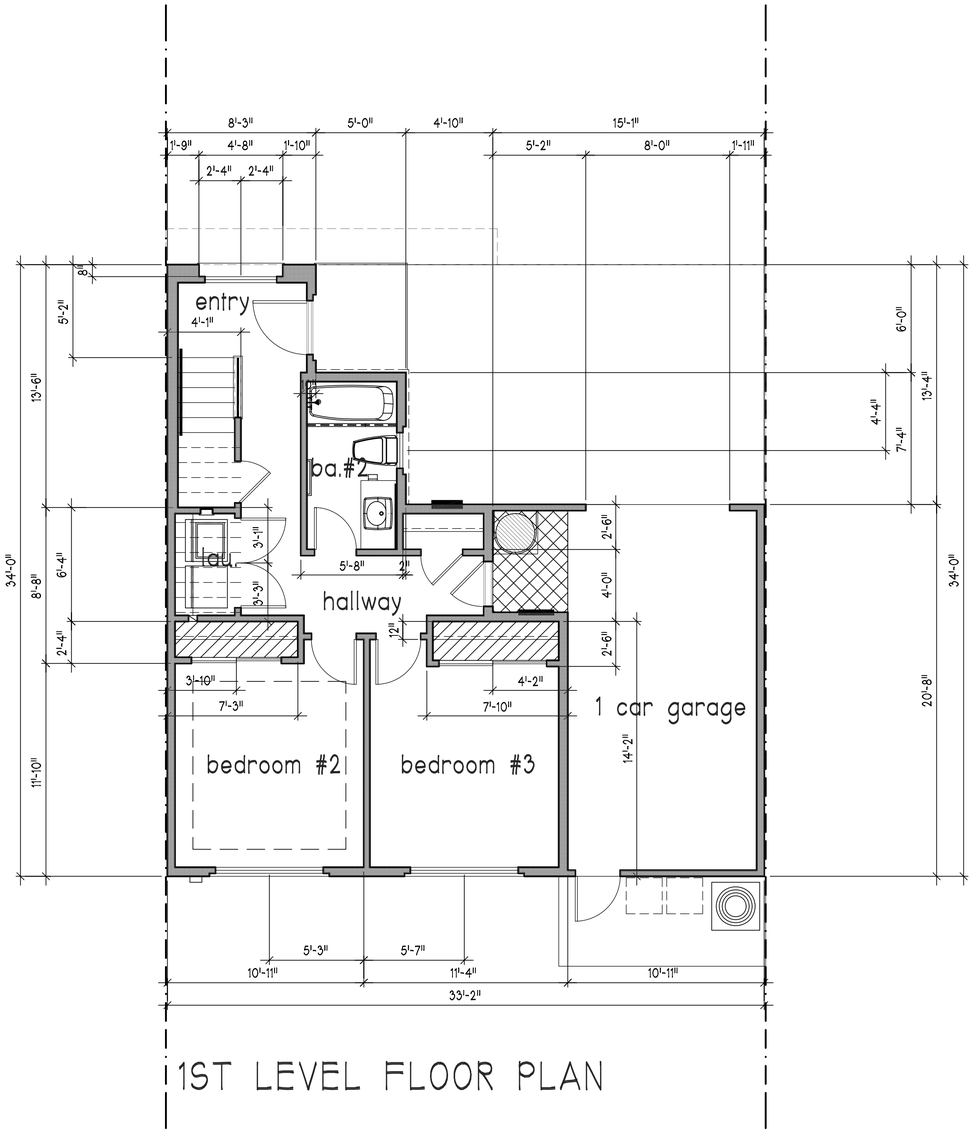

1ST LEVEL FLOOR PLAN

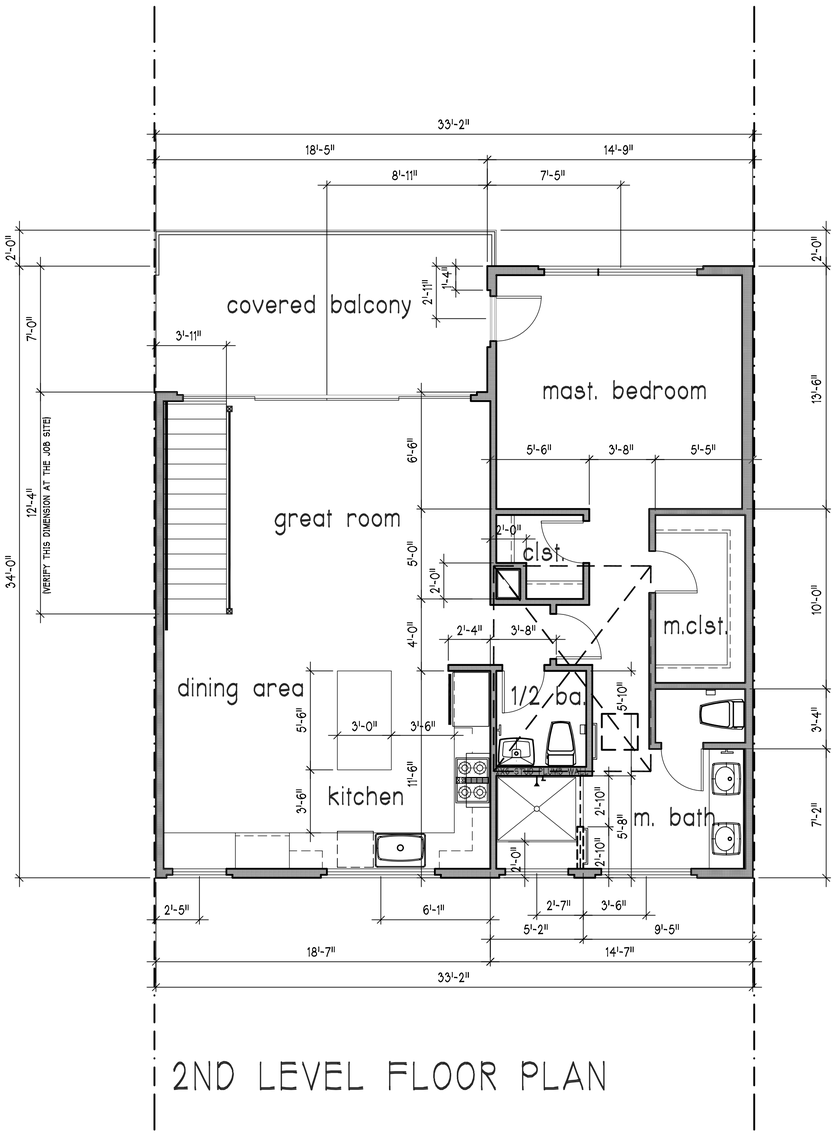

2ND LEVEL FLOOR PLAN

FLOOR PLAN "B" (dimensions only)

SCALE: 1/4" = 1'-0"

THESE DRAWINGS ARE THE PROPERTY OF OSITO HOLDINGS, LLC AND ARE INTENDED FOR USE SOLELY ON THE PROJECT TITLED HEREON. THESE DRAWINGS AS PROTECTED UNDER COPYRIGHT LAWS ARE NOT TO BE REPRODUCED IN WHOLE OR PART IN ANY MANNER WITHOUT THE EXPRESSED WRITTEN CONSENT OF THE DESIGNER. USE OF THESE DRAWINGS IS LIMITED TO THE SITE INTENDED AND THEIR USE AT ANY OTHER SITE, OR ON OTHER PROJECTS IS PROHIBITED EXCEPT BY PRIOR WRITTEN CONSENT OF THE DESIGNER. ALL REPRODUCTING OF THESE DRAWINGS, IN WHOLE OR PART, REMAIN UNDER THE OWNERSHIP OF THE DESIGNER AND SHALL BE RETURNED UPON COMPLETION OF THE PROJECT OR UPON REQUEST OF THE DESIGNER.

COPYRIGHT © 2020

OWNER / DEVELOPER:

OSITO HOLDINGS, LLC
P.O. BOX 2827
MESA, AZ 85214
(480) 646.6323

PROJECT:

TENNANT SQUARE
215 TENNANT AVENUE
MORGAN HILL, CA.
COUNTY OF
SANTA CLARA

DRAWING:

FLOOR PLAN "B" (dimensions only)

LICENSED ARCHITECT
ZUISHUANG CHEN
NO. C-28156
REN. 5/31/25
STATE OF CALIFORNIA

REVISIONS:

DATE: JUNE 03, 2024
SCALE: AS NOTED
DRAWN BY: G.E.MOORE
PROJ. MGR. G.E.MOORE
PROJECT FILE: 0.20-TENNANT
DRAWING: B2-A31

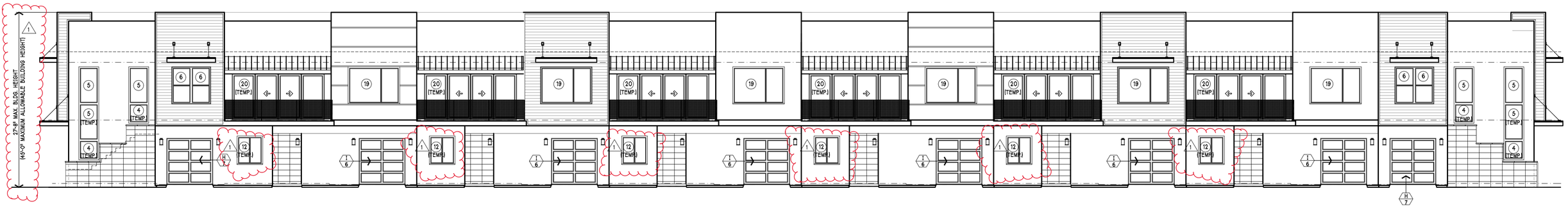

FRONT ELEVATION

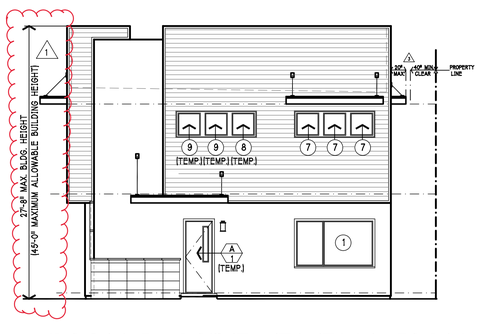

RIGHT SIDE ELEVATION

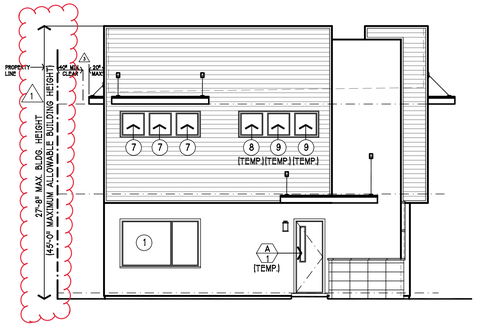

LEFT SIDE ELEVATION

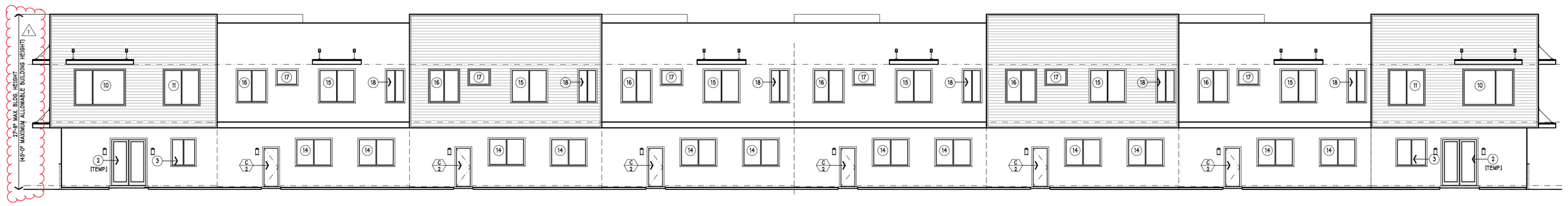

REAR ELEVATION

MASTER EXTERIOR ELEVATIONS BUILDING "2"

SCALE: 1/8" = 1'-0"

THESE DRAWINGS ARE THE PROPERTY OF OSITO HOLDINGS, LLC AND ARE INTENDED FOR USE SOLELY ON THE PROJECT TITLED HEREON. THESE DRAWINGS AS PROTECTED UNDER COPYRIGHT LAWS ARE NOT TO BE REPRODUCED IN WHOLE OR PART IN ANY MANNER WITHOUT THE EXPRESSED WRITTEN CONSENT OF THE DESIGNER. USE OF THESE DRAWINGS IS LIMITED TO THE SITE INTENDED AND THEIR USE AT ANY OTHER SITE, OR ON OTHER PROJECTS IS PROHIBITED EXCEPT BY PRIOR WRITTEN CONSENT OF THE DESIGNER. ALL REPRODUCTINS OF THESE DRAWINGS, IN WHOLE OR PART, REMAIN UNDER THE OWNERSHIP OF THE DESIGNER AND SHALL BE RETURNED UPON COMPLETION OF THE PROJECT OR UPON REQUEST OF THE DESIGNER.

COPYRIGHT © 2020

OWNER / DEVELOPER:

OSITO HOLDINGS, LLC
P.O. BOX 2827
MESA, AZ 85214
(480) 646.6323

PROJECT:

TENNANT SQUARE
215 TENNANT AVENUE
MORGAN HILL, CA.
COUNTY OF
SANTA CLARA

DRAWING:

MASTER EXTERIOR ELEVATIONS BUILDING "2"

LICENSED ARCHITECT
ZUISHUANG CHEN
REN. 5/31/25
STATE OF CALIFORNIA

REVISIONS:
1. 02.20.2025 PLAN CHECK RESPONSE
2. 10.12.2024 PLAN CHECK RESPONSE

DATE: OCTOBER 12, 2024
SCALE: AS NOTED
DRAWN BY: G.E.MOORE
PROJ. MGR. G.E.MOORE
PROJECT FILE: 0.20-TENNANT
DRAWING: B2-A4

FULL FRONT EXTERIOR ELEVATION

SCALE: 1/8" = 1'-0"

EXTERIOR FINISH MATERIALS:

1. CEMENT PLASTER: - 3 COAT CEMENT PLASTER (7/8") W/ COLOR COAT SET O/ 17GA. SELF-FURRED, G.I. STUCCO NETTING W/ DBL. LAYER OF TYPE "X" ASPHALT SATUARATED BUILDING PAPER>
2. EXTERIOR WOOD SIDING: - 1 X 8 (7 1/4" EXPOSURE) BORAL TRU EXTERIOR "SHIPLAP" HARDBOARD SIDING W/ SMOOTH SURFACE FACE AND PAINT FINISH.
3. EXTERIOR WOOD TRIM: - 1 X 3 BORAL TRU EXTERIOR HARDBOARD TRIM W/ SMOOTH SURFACE AND PAINT FINISH.
4. HORIZONTAL BELLY BAND TRIM: - BORAL TRU EXTERIOR 2 X 12 HARDBOARD TRIM W/ SMOOTH FACE AND PAINT FINISH.
5. EXPOSED ROOF: - CALIFORNIA STANDING SEAM METAL ROOF W/ STANDING SEAMS SET AT 12" O.C. - ALUMINUM W/ KYNAR PAINT FINISH.
6. MASONRY VENEER EXTERIOR: - EL DORADO STONE MANUFACTURED MASONRY VENEER "LONGITUDE 24" - SILENT GREY.
7. EXPOSED STRUCTURAL "I" BEAM W/ PAINT FINISH.
8. WINDOWS: MILGARD "TUSCANY" SERIES COLOR IS TO BE "CLASSIC BROWN".
9. RESIDENCE FRONT ENTRY DOOR: - PLASTPRO 3'-0" X 8'-0" SMOOTH SURFACE SOLID CORE W/ TEMPERED GLASS
10. CLOPAY GARAGE SECTIONAL OVERHEAD DOOR: AVANTE SERIES 8'-0" X 8'-0" 2 1/2" BRONZE ANODIZED ALUMINUM FRAME W/ FROSTED TEMPERED GLASS DOOR PANELS.
11. WINDOW CANOPY: CUSTOM MANUFACTURE AND SIZE ALUMINUM MATERIAL W/ PAINT FINISH TO MATCH TRIM.

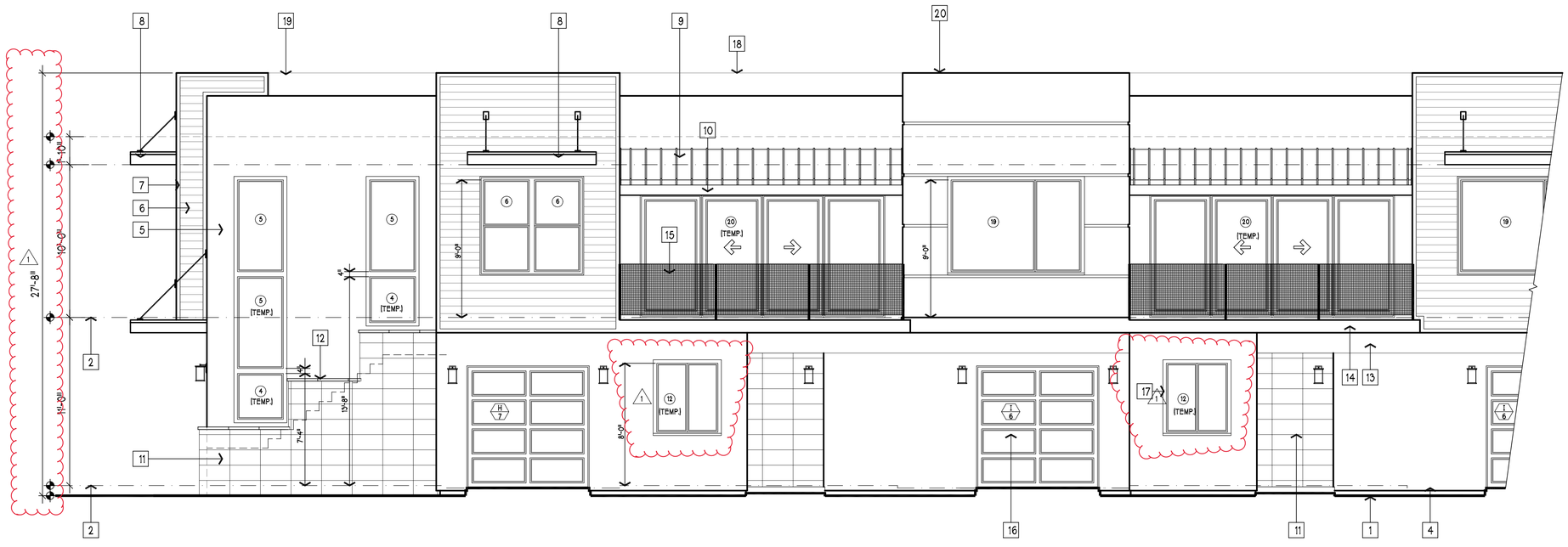

PARTIAL FRONT EXTERIOR ELEVATION

SCALE: 1/4" = 1'-0"

EXTERIOR KEYNOTES:

1	EXPECTED FINISH GRADE LINE (SEE CIVIL ENGINEERS DOCUMENTS)
2	LIVING AREA 1ST LEVEL FINISH FLOOR LINE
3	LIVING ARE 2ND LEVEL FINISH FLOOR LINE
4	GARAGE FINISH FLOOR LINE
5	DRI-VIT EXTERIOR PLASTER WALL COATING W/ SMOOTH TROWEL FINISH * (INTRIGAL COLOR)
6	HORIZONTAL SHIP LAP WOOD EXTERIOR WALL FINISH (CEDAR)
7	1X3 S4S CEDAR HORIZONTAL AND VERTICAL TRIM W/ CLEAR FINISH
8	PRE-FABRICATED METAL WINDOW AWNING W/ POWDER COAT FINISH
9	STANDING SEAM METAL RIBBED ALUMINUM ROOF W/ POWDER COAT FINISH (SEE COLOR BOARD)
10	EXPOSED S4S D.F. ROOF BEAM W/ SEMI-TRANSPARENT STAIN FINISH
11	EL DORADO MANUFACTURED STONE EXTERIOR WALL VENEER (SEE COLOR BOARD FOR PATTERN AND COLOR)
12	EL DORADO STONE MASONRY WALL CAP AND TRIM
13	EXPOSED ENGINEERED "I" BEAM W/ POWDER COAT COLOR FINISH
14	2X S4S D.F HORIZONTAL BAND TRIM W/ COLOR COAT DRI-VIT FINISH
15	HORIZONTAL WIRED AND TURNBUCKLE DECK RAILING W/ HORIZONTAL UNITS SPACED IN SUCH A MANNER SO AS TO PREVENT THE PASSAGE OF A 4" DIA. SPHERE (TYPICAL)
16	SECTIONAL OVERHEAD GARAGE DOOR W/ FROSTED TRANSLUCENT NATURAL LIGHT PENITRATING DOOR PANELS
17	2" WALL RECESS AT ALL WINDOW AND DOORS (TYPICAL)
18	ROOF PARAPET WALL LINE BEYOND (REAR ELEVATION)
19	EXPECTED FINISH ROOF LINE BEYOND
20	1" HORIZONTAL G.I. STUCCO SCREED W/ BRUSHED FINISH

*NOTE:
EVERY OTHER UNIT EXTERIOR DRI-VIT SYSTEM FINISH IS TO HAVE A SMOOTH "PEBBLE" FINISH TO INCLUDE COLOR COAT.

THESE DRAWINGS ARE THE PROPERTY OF OSITO HOLDINGS, LLC AND ARE INTENDED FOR USE SOLELY ON THE PROJECT TITLED HEREON. THESE DRAWINGS AS PROTECTED UNDER COPYRIGHT LAWS ARE NOT TO BE REPRODUCED IN WHOLE OR PART IN ANY MANNER WITHOUT THE EXPRESSED WRITTEN CONSENT OF THE DESIGNER. USE OF THESE DRAWINGS IS LIMITED TO THE SITE INTENDED AND THEIR USE AT ANY OTHER SITE, OR ON OTHER PROJECTS IS PROHIBITED EXCEPT BY PRIOR WRITTEN CONSENT OF THE DESIGNER. ALL REPRODUCTINS OF THESE DRAWINGS, IN WHOLE OR PART, REMAIN UNDER THE OWNERSHIP OF THE DESIGNER AND SHALL BE RETURNED UPON COMPLETION OF THE PROJECT OR UPON REQUEST OF THE DESIGNER.

COPYRIGHT © 2020

OWNER / DEVELOPER:

OSITO HOLDINGS, LLC
P.O. BOX 2827
MESA, AZ 85214
(480) 646.6323

PROJECT:

TENNANT SQUARE
215 TENNANT AVENUE
MORGAN HILL, CA.
COUNTY OF
SANTA CLARA

DRAWING:

FRONT EXTERIOR ELEVATION BUILDING "2"

LICENSED ARCHITECT
ZUISHUANG CHEN
NO. C-28156
REN. 5/31/25
STATE OF CALIFORNIA

REVISIONS:
1 02.20.2025 PLAN CHECK RESPONSE

DATE: JUNE 03, 2024
SCALE: AS NOTED
DRAWN BY: G.E.MOORE
PROJ. MGR. G.E.MOORE
PROJECT FILE: 0.20-TENNANT
DRAWING: B2-A41

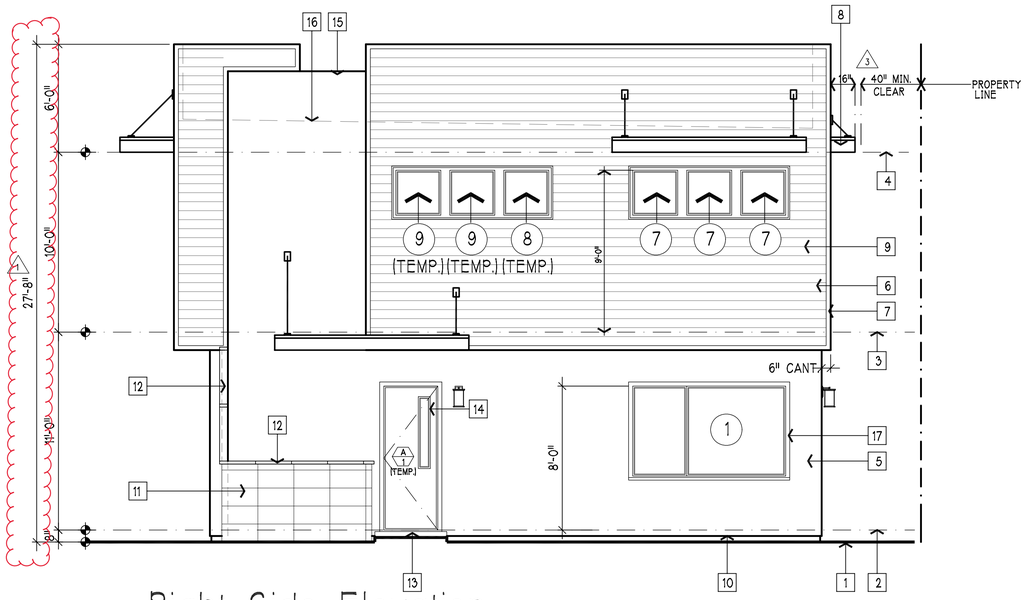

Right Side Elevation

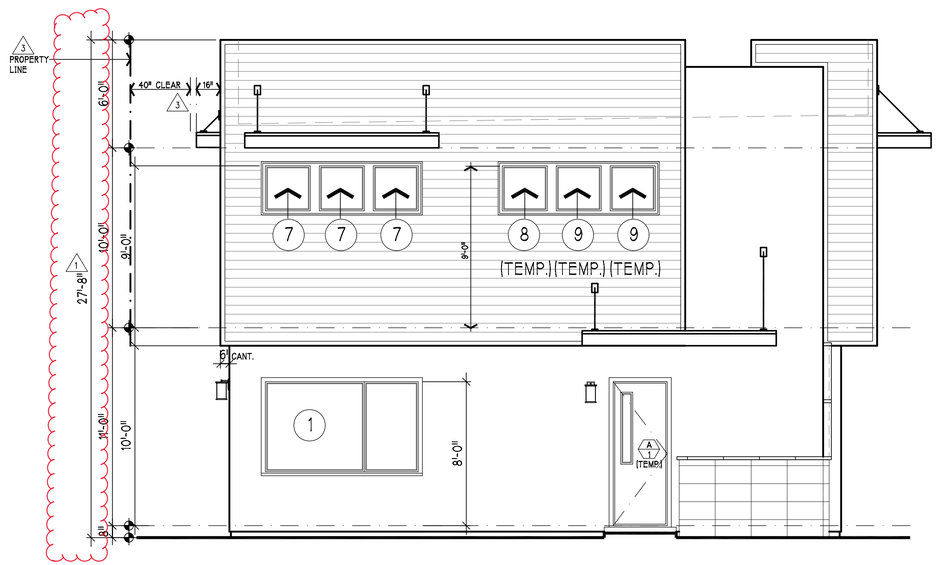

Left Side Elevation

SIDE / END EXTERIOR ELEVATIONS

SCALE: 1/4" = 1'-0"

EXTERIOR KEYNOTES:

1	EXPECTED FINISH GRADE LINE (SEE CIVIL ENGINEERS DOCUMENTS)
2	LIVING AREA 1ST LEVEL FINISH FLOOR LINE
3	LIVING AREA 2ND LEVEL FINISH FLOOR LINE
4	2ND LEVEL FINISH CEILING LINE
5	DRI-VIT EXTERIOR PLASTER WALL COATING W/ SMOOTH TROWEL FINISH * (INTRIGAL COLOR)
6	HORIZONTAL SHIP LAP WOOD EXTERIOR WALL FINISH (CEDAR)
7	1X3 S4S CEDAR HORIZONTAL AND VERTICAL TRIM W/ CLEAR FINISH
8	PRE-FABRICATED METAL WINDOW AWNING W/ POWDER COAT FINISH SEE DETAIL ON THIS SHEET
9	MULTI-PIECE 1X S4S CEDAR RECESSED WINDOW HORIZONTAL AND VERTICAL TRIM W/ STAIN FINISH
10	G.I. DRI-VIT DRIP SCREED SET A MIN. OF 4" ABOVE COMMON FINISH GRADE
11	EL DORADO MANUFACTURED STONE EXTERIOR WALL VENEER (SEE COLOR BOARD FOR PATTERN AND COLOR)
12	EL DORADO STONE MASONRY WALL CAP AND TRIM
13	CONCRETE LANDING / PORCH W/ NON-SLIP BROOM FINISH
14	TYPICAL 3'-0" X 8'-0" FRONT ENTRY DOOR W/ TEMPERED GLASS WINDOW
15	COMMON ROOF PARAPET WALL
16	FINISH ROOF AND PARAPET WALL LINE BEYOND
17	2" WALL RECESS AT ALL WINDOW AND DOORS (TYPICAL)
18	FRONT ENTRY DOOR TRANSOM WINDOW (TYPICAL)

*NOTE:
EVERY OTHER UNIT EXTERIOR DRI-VIT SYSTEM FINISH IS TO HAVE A SMOOTH "PEBBLE" FINISH TO INCLUDE COLOR COAT.

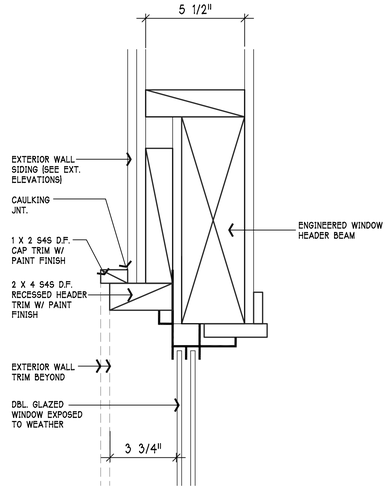

WINDOW HEADER DETAIL

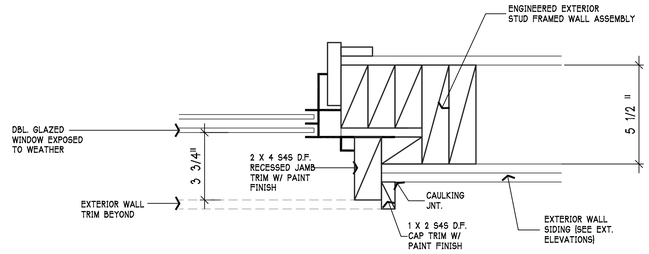

WINDOW JAMB DETAIL

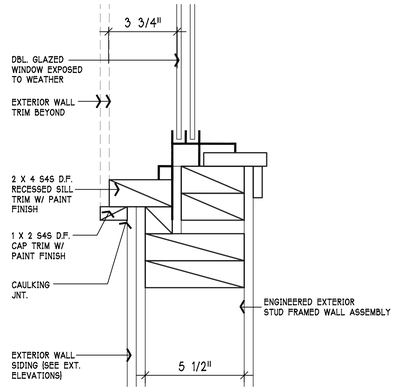

WINDOW SILL DETAIL

WINDOW FRAMING DETAILS

SCALE: 3" = 1'-0"

THESE DRAWINGS ARE THE PROPERTY OF OSITO HOLDINGS, LLC AND ARE INTENDED FOR USE SOLELY ON THE PROJECT TITLED HEREON. THESE DRAWINGS AS PROTECTED UNDER COPYRIGHT LAWS ARE NOT TO BE REPRODUCED IN WHOLE OR PART IN ANY MANNER WITHOUT THE EXPRESSED WRITTEN CONSENT OF THE DESIGNER. USE OF THESE DRAWINGS IS LIMITED TO THE SITE INTENDED AND THEIR USE AT ANY OTHER SITE, OR ON OTHER PROJECTS IS PROHIBITED EXCEPT BY PRIOR WRITTEN CONSENT OF THE DESIGNER. ALL REPRODUCTIONS OF THESE DRAWINGS, IN WHOLE OR PART, REMAIN UNDER THE OWNERSHIP OF THE DESIGNER AND SHALL BE RETURNED UPON COMPLETION OF THE PROJECT OR UPON REQUEST OF THE DESIGNER.

COPYRIGHT © 2020

OWNER / DEVELOPER:

OSITO HOLDINGS, LLC
P.O. BOX 2827
MESA, AZ 85214
(480) 646.6323

PROJECT:

TENNANT SQUARE
215 TENNANT AVENUE
MORGAN HILL, CA.
COUNTY OF
SANTA CLARA

DRAWING:

SIDE / END EXTERIOR ELEVATIONS BUILDING "2"

LICENSED ARCHITECT
LUISHUANG CHEN
REN. 5/31
STATE OF CALIFORNIA

REVISIONS:
1. 02.20.2023 PLAN CHECK RESPONSE
2. 10.12.2024 PLAN CHECK RESPONSE

DATE: OCTOBER 12, 2024
SCALE: AS NOTED
DRAWN BY: G.E.MOORE
PROJ. MGR. G.E.MOORE
PROJECT FILE: 0.20-TENNANT
DRAWING: B2-A42

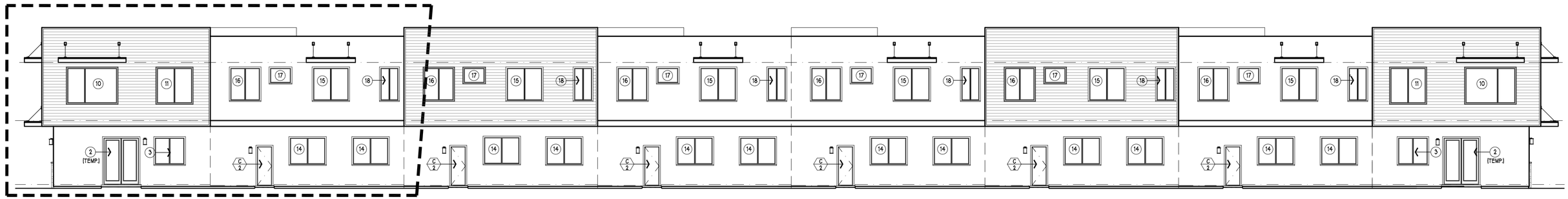

Rear Exterior Elevation

SCALE: 1/8" = 1'-0"

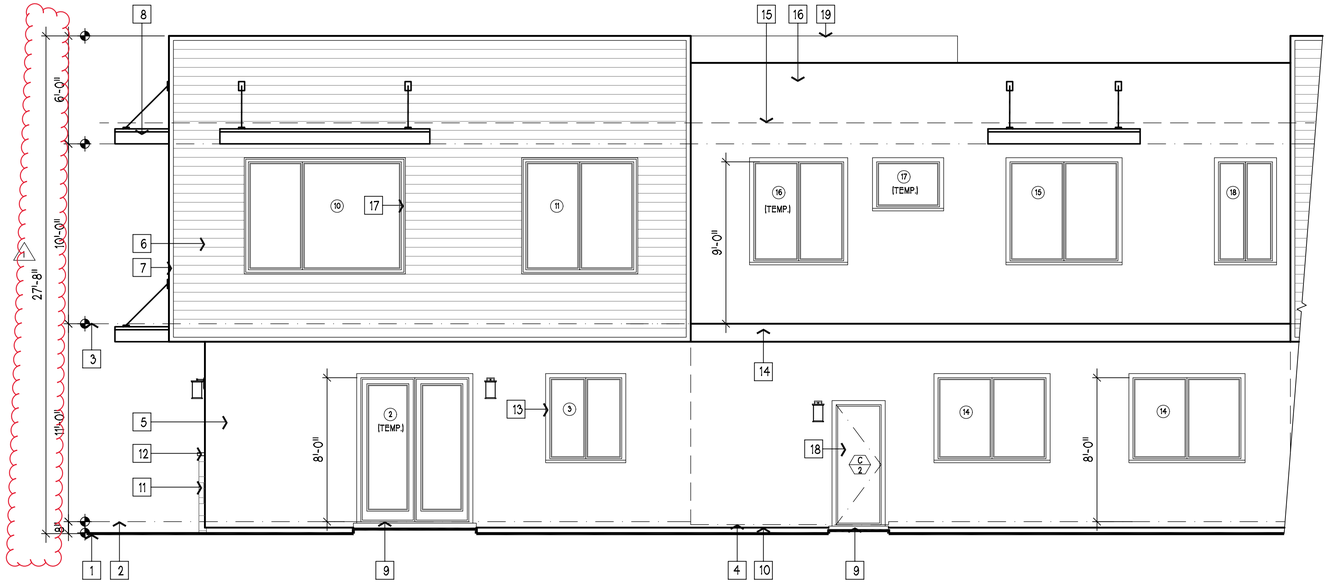

PARTIAL REAR EXTERIOR ELEVATION

SCALE: 1/4" = 1'-0"

EXTERIOR KEYNOTES:

1	EXPECTED FINISH GRADE LINE (SEE CIVIL ENGINEERS DOCUMENTS)
2	LIVING AREA 1ST LEVEL FINISH FLOOR LINE
3	LIVING ARE 2ND LEVEL FINISH FLOOR LINE
4	GARAGE FINISH FLOOR LINE
5	DRI-VIT EXTERIOR PLASTER WALL COATING W/ SMOOTH TROWEL FINISH * (INTRIGAL COLOR)
6	HORIZONTAL SHIP LAP WOOD EXTERIOR WALL FINISH (CEDAR)
7	1X3 S4S CEDAR HORIZONTAL AND VERTICAL TRIM W/ CLEAR FINISH
8	PRE-FABRICATED METAL WINDOW AWNING W/ POWDER COAT FINISH
9	CONCRETE STOOP / LANDING W/ BROOM NON-SLIP FINISH SURFACE
10	G.I. DRI-VIT DRIP SCREED SET A MIN. OF 4" ABOVE COMMON FINISH GRADE
11	EL DORADO MANUFACTURED STONE EXTERIOR WALL VENEER (SEE COLOR BOARD FOR PATTERN AND COLOR)
12	EL DORADO STONE MASONRY WALL CAP AND TRIM
13	2" WALL RECESS AT ALL WINDOW AND DOORS [TYPICAL]
14	2X S4S D.F. HORIZONTAL BAND TRIM W/ COLOR COAT DRI-VIT FINISH
15	ROOF LINE BEYOND
16	PARAPET WALL W/ DRI-VIT SURFACE FINISH
17	2 PIECE S4S CEDAR RECESSED WINDOW TRIM [TYPICAL]
18	GARAGE ACCESS MAN DOOR W/ PAINT FINISH
19	PARAPET WALL LINE BEYOND

*NOTE:
EVERY OTHER UNIT EXTERIOR DRI-VIT SYSTEM FINISH IS TO HAVE A SMOOTH "PEBBLE" FINISH TO INCLUDE COLOR COAT.

THESE DRAWINGS ARE THE PROPERTY OF OSITO HOLDINGS, LLC AND ARE INTENDED FOR USE SOLELY ON THE PROJECT TITLED HEREON. THESE DRAWINGS AS PROTECTED UNDER COPYRIGHT LAWS ARE NOT TO BE REPRODUCED IN WHOLE OR PART IN ANY MANNER WITHOUT THE EXPRESSED WRITTEN CONSENT OF THE DESIGNER. USE OF THESE DRAWINGS IS LIMITED TO THE SITE INTENDED AND THEIR USE AT ANY OTHER SITE, OR ON OTHER PROJECTS IS PROHIBITED EXCEPT BY PRIOR WRITTEN CONSENT OF THE DESIGNER. ALL REPRODUCTINS OF THESE DRAWINGS, IN WHOLE OR PART, REMAIN UNDER THE OWNERSHIP OF THE DESIGNER AND SHALL BE RETURNED UPON COMPLETION OF THE PROJECT OR UPON REQUEST OF THE DESIGNER.

COPYRIGHT © 2020

OWNER / DEVELOPER:

OSITO HOLDINGS, LLC
P.O. BOX 2827
MESA, AZ 85214
(480) 646.6323

PROJECT:

TENNANT SQUARE
215 TENNANT AVENUE
MORGAN HILL, CA.
COUNTY OF
SANTA CLARA

DRAWING:

REAR EXTERIOR ELEVATION BUILDING "2"

LICENSED ARCHITECT
ZUISHUANG CHEN
NO. C-28156
REN. 5/31/25
STATE OF CALIFORNIA

REVISIONS:
1 02.20.2025 PLAN CHECK RESPONSE

DATE: JUNE 03, 2024
SCALE: AS NOTED
DRAWN BY: G.E.MOORE
PROJ. MGR. G.E.MOORE
PROJECT FILE: 0.20-TENNANT
DRAWING: B2-A43

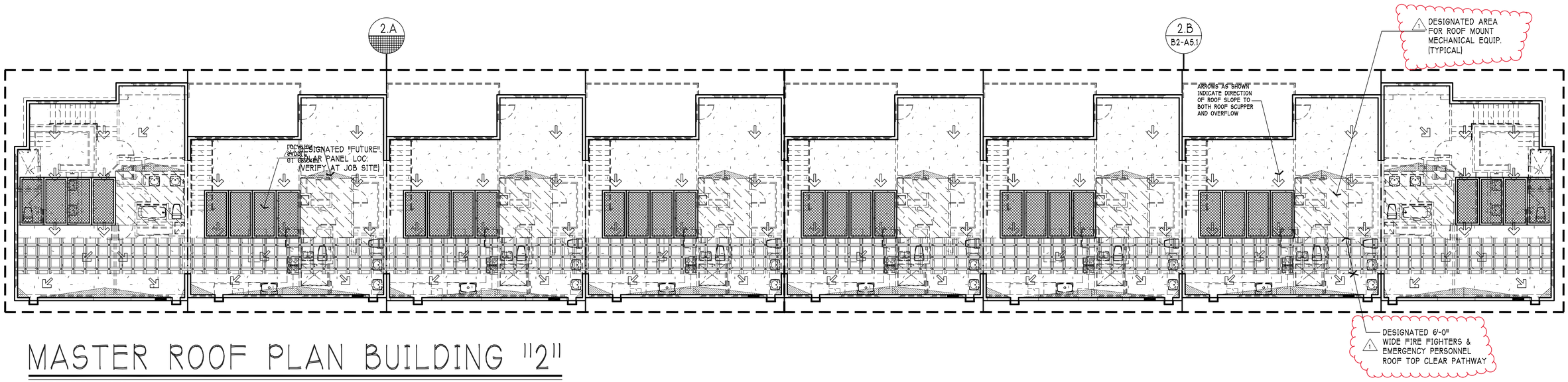

MASTER ROOF PLAN BUILDING "2"

SCALE: 1/8" = 1'-0"

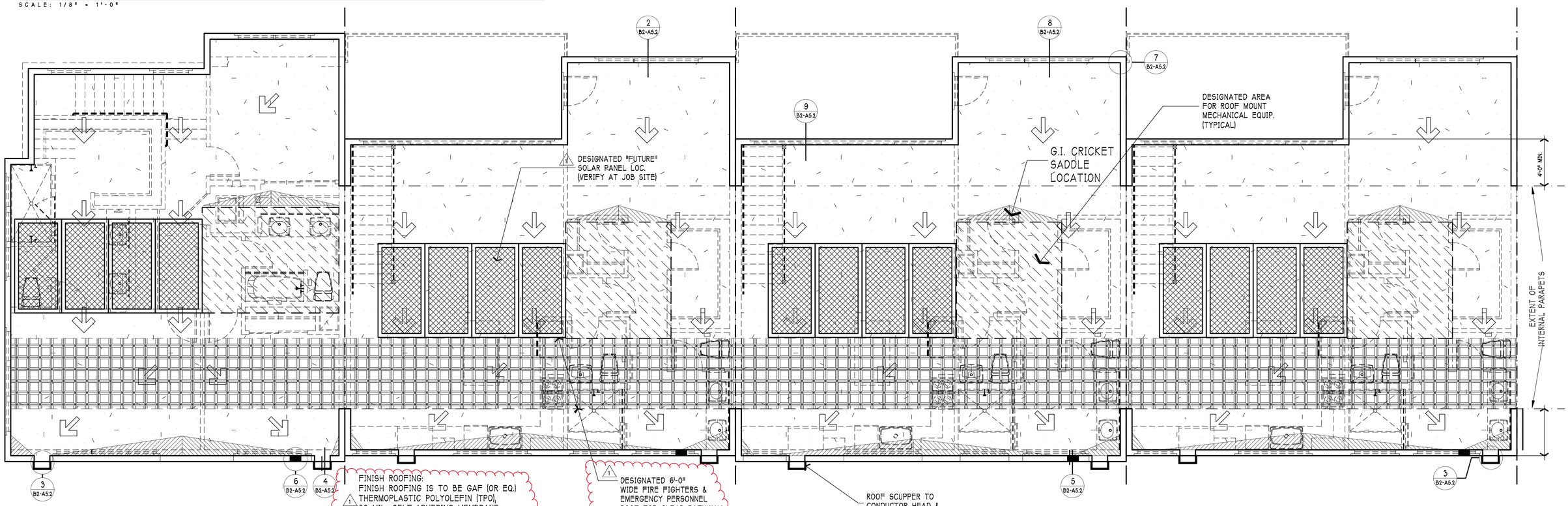

PARTIAL ROOF PLAN - "2.A"

THESE DRAWINGS ARE THE PROPERTY OF OSITO HOLDINGS, LLC AND ARE INTENDED FOR USE SOLELY ON THE PROJECT TITLED HEREON. THESE DRAWINGS AS PROTECTED UNDER COPYRIGHT LAWS ARE NOT TO BE REPRODUCED IN WHOLE OR PART IN ANY MANNER WITHOUT THE EXPRESSED WRITTEN CONSENT OF THE DESIGNER. USE OF THESE DRAWINGS IS LIMITED TO THE SITE INTENDED AND THEIR USE AT ANY OTHER SITE, OR ON OTHER PROJECTS IS PROHIBITED EXCEPT BY PRIOR WRITTEN CONSENT OF THE DESIGNER. ALL REPRODUCTINS OF THESE DRAWINGS, IN WHOLE OR PART, REMAIN UNDER THE OWNERSHIP OF THE DESIGNER AND SHALL BE RETURNED UPON COMPLETION OF THE PROJECT OR UPON REQUEST OF THE DESIGNER.

COPYRIGHT © 2020

OWNER / DEVELOPER:

OSITO HOLDINGS, LLC
P.O. BOX 2827
MESA, AZ 85214
(480) 646.6323

PROJECT:

TENNANT SQUARE
215 TENNANT AVENUE
MORGAN HILL, CA.
COUNTY OF
SANTA CLARA

DRAWING:

MASTER ROOF PLAN BUILDING "2",
PARTIAL ROOF PLAN "2.A" &
MISC. NOTES

LICENSED ARCHITECT
ZUISHUANG CHEN
NO. C-28158
REN. 5/31/25
STATE OF CALIFORNIA

REVISIONS:
1 03.20.2025 PLAN CHECK RESPONSE

DATE: JUNE 03, 2024
SCALE: AS NOTED
DRAWN BY: G.E.MOORE
PROJ. MGR. G.E.MOORE
PROJECT FILE: 0.20-TENNANT
DRAWING: B2-A5

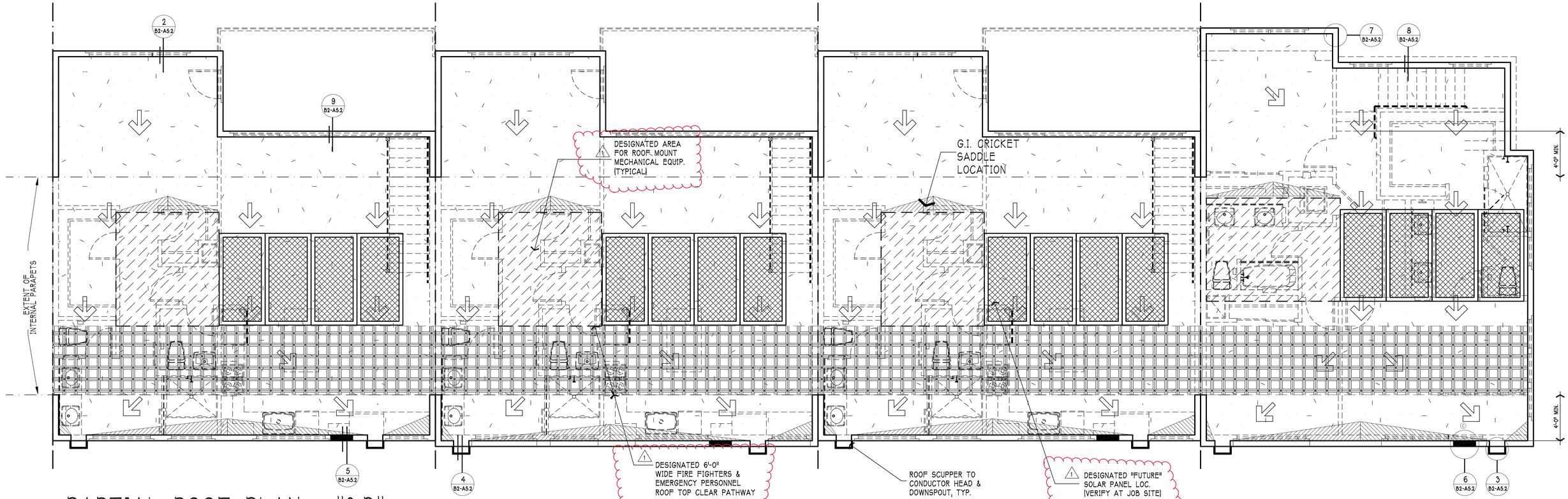

PARTIAL ROOF PLAN - "2.B"

SCALE: 1/4" = 1'-0"

1 FINISH ROOFING:
FINISH ROOFING IS TO BE GAF (OR EQ.)
THERMOPLASTIC POLYOLEFIN (TPO),
80 MIL., SELF-ADHERING MEMBRANE
CLASS "A" - (RATING BY UL - UL ER1306-01)

THESE DRAWINGS ARE THE PROPERTY OF OSITO HOLDINGS, LLC AND ARE INTENDED FOR USE SOLELY ON THE PROJECT TITLED HEREON. THESE DRAWINGS AS PROTECTED UNDER COPYRIGHT LAWS ARE NOT TO BE REPRODUCED IN WHOLE OR PART IN ANY MANNER WITHOUT THE EXPRESSED WRITTEN CONSENT OF THE DESIGNER. USE OF THESE DRAWINGS IS LIMITED TO THE SITE INTENDED AND THEIR USE AT ANY OTHER SITE, OR ON OTHER PROJECTS IS PROHIBITED EXCEPT BY PRIOR WRITTEN CONSENT OF THE DESIGNER. ALL REPRODUCTINS OF THESE DRAWINGS, IN WHOLE OR PART, REMAIN UNDER THE OWNERSHIP OF THE DESIGNER AND SHALL BE RETURNED UPON COMPLETION OF THE PROJECT OR UPON REQUEST OF THE DESIGNER.

COPYRIGHT © 2020

OWNER / DEVELOPER:

OSITO HOLDINGS, LLC
P.O. BOX 2827
MESA, AZ 85214
(480) 646.6323

PROJECT:

TENNANT SQUARE
215 TENNANT AVENUE
MORGAN HILL, CA.
COUNTY OF
SANTA CLARA

DRAWING:

MASTER ROOF PLAN BUILDING "2",
PARTIAL ROOF PLAN "2.B" &
MISC. NOTES

LICENSED ARCHITECT
ZUISHUANG CHEN
NO. C-28156
REN. 5/31/25
STATE OF CALIFORNIA

REVISIONS:
1 02.20.2025 PLAN CHECK RESPONSE

DATE: JUNE 03, 2024
SCALE: AS NOTED
DRAWN BY: G.E.MOORE
PROJ. MGR. G.E.MOORE
PROJECT FILE: 0.20-TENNANT
DRAWING: B2-A5.1

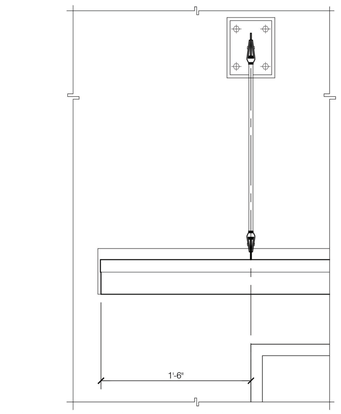

NOT TO SCALE

10. METAL WINDOW CANOPY FRAMING DETAIL

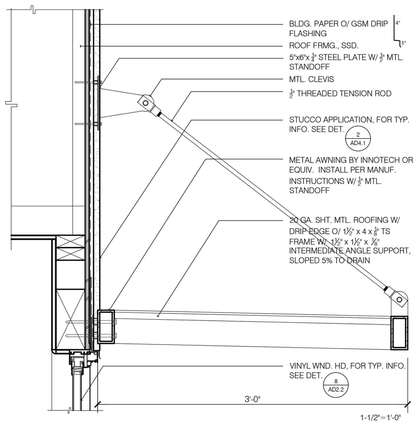

NOT TO SCALE

11. DETAIL NOT USED

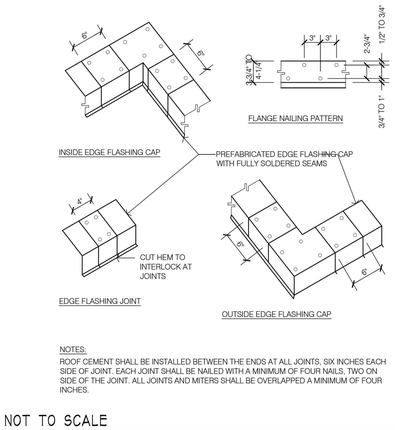

NOTES:
ROOF CEMENT SHALL BE INSTALLED BETWEEN THE ENDS AT ALL JOINTS, SIX INCHES EACH SIDE OF JOINT. EACH JOINT SHALL BE NAILED WITH A MINIMUM OF FOUR NAILS, TWO ON SIDE OF THE JOINT. ALL JOINTS AND MITERS SHALL BE OVERLAPPED A MINIMUM OF FOUR INCHES.

NOT TO SCALE

7. PARAPET WALL CORNER DETAILS

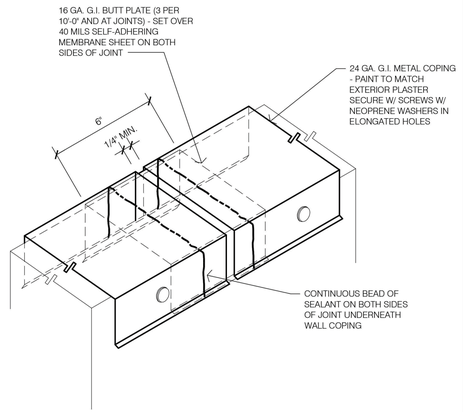

NOT TO SCALE

8. PARAPET WALL CAP FLASHING DETAIL

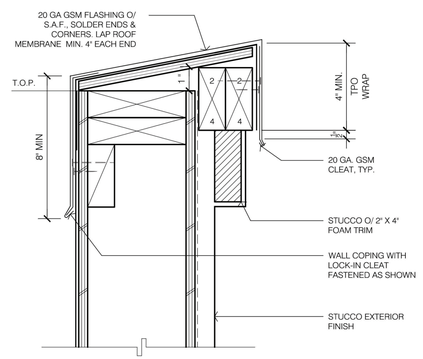

NOT TO SCALE

9. PARAPET FLASHING CAP DETAIL AT STUCCO

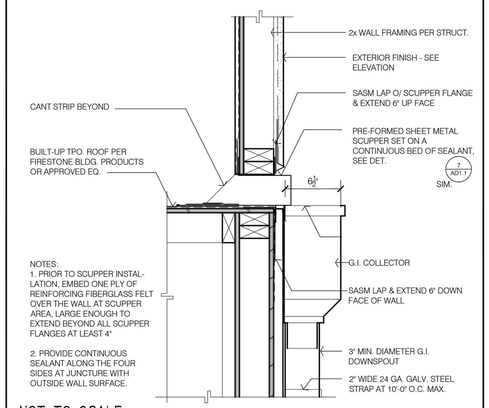

NOT TO SCALE

4. ROOF SCUPPER - SECTION

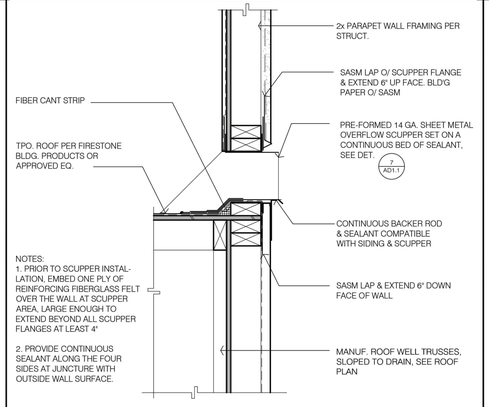

NOT TO SCALE

5. ROOF OVERFLOW SUPPER - SECTION

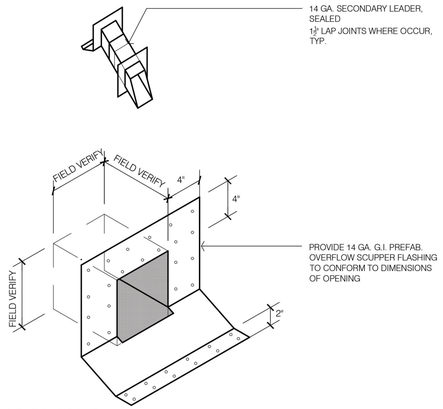

NOT TO SCALE

6. ROOF SCUPPER & OVERFLOW DETAIL

1. GENERAL ROOFING NOTES:

ROOF PLAN NOTES - SEE OWNER SPECIFICATIONS FOR FURTHER INFORMATION

1 A. SINGLE PLY THERMOPLASTIC (TPO) MEMBRANE ROOF, INTEGRATED MANUFACTURER ACCESSORIES, INCLUDING BUT NOT LIMITED TO VENTING BOOTS, CORNER REINFORCEMENT, SCUPPER, ETC.. COLOR TO BE WHITE. PROVIDE ENHANCED WALKING SURFACE PER PLAN.

1 B. FLAT ROOF SLOPES TO BE 3/8"/FT. MIN.. MAIN ROOF SLOPE PROVIDED BY ROOF FRAMING AND TRUSSES. CRICKETS AND SLOPES REQUIRED FOR DRAINAGE BY PLAN SHALL BE PROVIDED BY CONTRACTOR AND PER MANUFACTURERS RECOMMENDATIONS. INSULATION BOARD NOT REQUIRED AS INSULATION PROVIDED BELOW AT CEILING.

2. ALL DRAINAGE IS PROVIDED SCUPPERS AND ADJACENT OVERFLOW SCUPPERS WITH LEADERS AND DOWNSPOUTS. SEE PLANS AND DETAILS FOR LOCATION AND DESIGN. SEE PLUMBING PLANS FOR DRAINAGE CALCULATIONS

3. PROVIDE 26 GA. GSM. FLASHING AT ALL REQUIRED AREAS PER INDUSTRY STANDARDS (ROOF TO WALL INTERSECTIONS, ETC.) FLASHING AND COUNTERFLASHING SHALL BE INSTALLED PER MANUFACTURERS INSTRUCTIONS.

4. DOWNSPOUTS SHALL BE MIN. 3" Ø ROUND CONNECTED TO A PERIMETER DRAINAGE SYSTEM, SEE SOILS REPORT AND CIVIL DRAWINGS FOR ADDITIONAL INFORMATION. SEE PLUMBING PLANS FOR SIZING.

8. ALL PLUMBING AND MECHANICAL VENTS SHALL BE COMBINED INTO A MINIMUM AMOUNT IN ORDER TO REDUCE ROOF PENETRATIONS. BEFORE INSTALLATION OF VENTS AT ROOF, MEET WITH OWNER AND ARCHITECT TO VERIFY LOCATIONS.

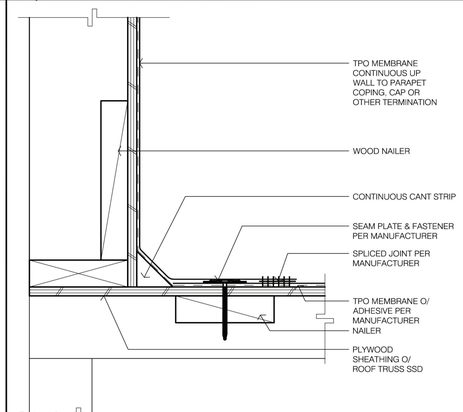

NOT TO SCALE

2. TPO BASE FLASHING AND CONTINUOUS AT PARAPET WALL

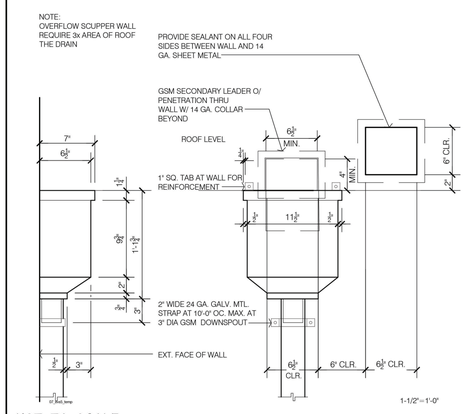

NOT TO SCALE

3. ROOF SCUPPER & OVERFLOW - ELEV. @ SCUPPER ABOVE

THESE DRAWINGS ARE THE PROPERTY OF OSITO HOLDINGS, LLC AND ARE INTENDED FOR USE SOLELY ON THE PROJECT TITLED HEREON. THESE DRAWINGS AS PROTECTED UNDER COPYRIGHT LAWS ARE NOT TO BE REPRODUCED IN WHOLE OR PART IN ANY MANNER WITHOUT THE EXPRESSED WRITTEN CONSENT OF THE DESIGNER. USE OF THESE DRAWINGS IS LIMITED TO THE SITE INTENDED AND THEIR USE AT ANY OTHER SITE, OR ON OTHER PROJECTS IS PROHIBITED EXCEPT BY PRIOR WRITTEN CONSENT OF THE DESIGNER. ALL REPRODUCTINS OF THESE DRAWINGS, IN WHOLE OR PART, REMAIN UNDER THE OWNERSHIP OF THE DESIGNER AND SHALL BE RETURNED UPON COMPLETION OF THE PROJECT OR UPON REQUEST OF THE DESIGNER.

COPYRIGHT © 2020

OWNER / DEVELOPER:

OSITO HOLDINGS, LLC
P.O. BOX 2827
MESA, AZ 85214
(480) 646.6323

PROJECT:

TENNANT SQUARE
215 TENNANT AVENUE
MORGAN HILL, CA.
COUNTY OF
SANTA CLARA

DRAWING:

ROOF FRAMING DETAILS AND NOTES

LICENSED ARCHITECT
ZUISHUANG CHEN
NO. C-28156
REN. 5/31/25
STATE OF CALIFORNIA

REVISIONS:
1 02.20.2023 PLAN CHECK RESPONSE
2 11.28.2023 PLAN CHECK RESPONSE

DATE: JUNE 24, 2023
SCALE: AS NOTED
DRAWN BY: G.E.MOORE
PROJ. MGR. G.E.MOORE
PROJECT FILE: 0.20-TENNANT
DRAWING: B2-52

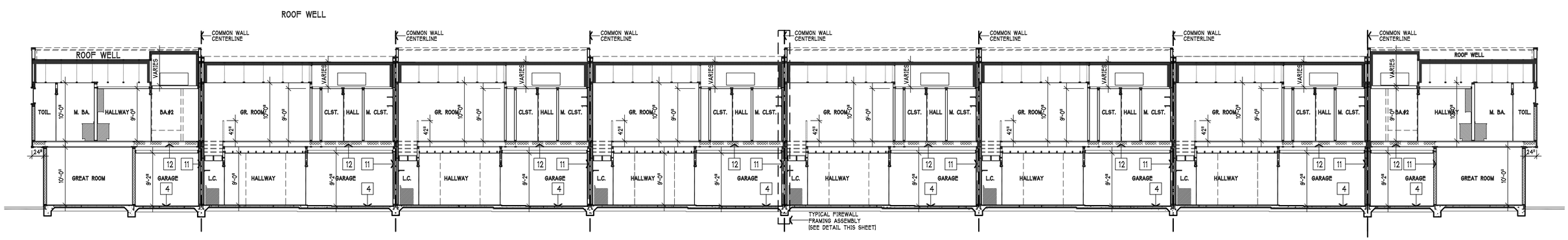

MASTER CROSS-SECTION "1" - BUILDING "2"

NOTE: ALL WORKING DRAWING CROSS-SECTIONAL ELEVATIONS ARE DIAGRAMTIC ONLY. FOR FRAMING METHODS, BEAM AND JOIST SIZING SEE STRUCTURAL DRAWINGS.

ALL OPENINGS AROUND GAS VENTS, DUCTS AND PIPES AT CEILING AND FLOOR LEVELS SHALL HAVE FIREBLOCKING AS PER 2019 C.R.C. R302.1.2 & C.R.C. 1003.19

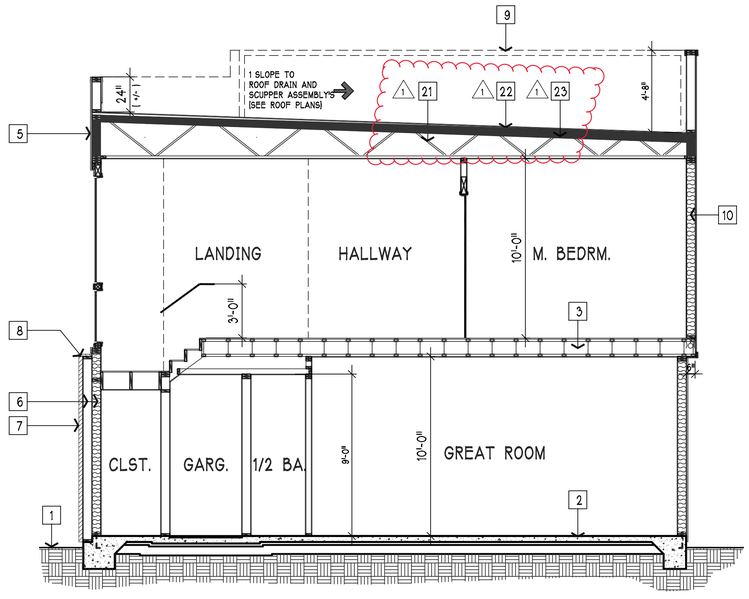

CROSS-SECTION "2"

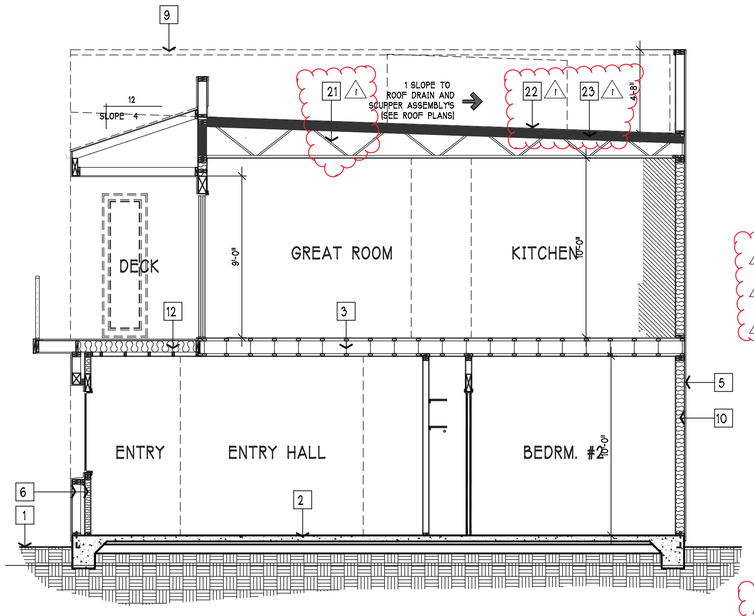

CROSS-SECTION "3"

CROSS-SECTIONAL KEYNOTES:

1	EXPECTED FINISH GRADE LINE (SEE CIVIL ENGINEERS DOCUMENTS)
2	ENGINEERED 1ST FLOOR CONCRETE SLAB (SEE STRUCTURAL DOCUMENTS)
3	ENGINEERED TJI TRUSS JOIST 2ND LEVEL FLOOR FRAMING ASSEMBLY (SEE STRUCTURAL DOCUMENTS)
4	GARAGE CONCRETE SLAB FLOOR
5	DRI-VIT EXTERIOR PLASTER WALL COATING W/ SMOOTH TROWEL FINISH * (INTRIGAL COLOR)
6	DOUBLE STUD 6" FURRED WALL FOR MASONRY FACE
7	MANUFACTURED STONE VENEER BY EL DORADO STONE (OR EQUAL)
8	MASONRY VENEER WALL CAP BY EL DORADO STONE (OR EQUAL)
9	PARAPET ROOF WALL BEYOND (SHOWN FOR REFERENCE ONLY)
10	R-21 FIBERGLASS BATT EXTERIOR WALL INSULATION (SEE TITLE #24 REPORT)
11	R-15 FIBERGLASS BATT INTERIOR GARAGE FIREWALL INSULATION (SEE TITLE #24 REPORT)
12	R-30 FIBERGLASS BATT FLOOR INSULATION (SEE TITLE #24 REPORT)
13	EXPOSED ENGINEERED "I" BEAM W/ POWDER COAT COLOR FINISH
14	2X 5#5 D.F HORIZONTAL BAND TRIM W/ COLOR COAT DRI-VIT FINISH
15	HORIZONTAL WIRED AND TURNBUCKLE DECK RAILING W/ HORIZONTAL UNITS SPACED IN SUCH A MANNER SO AS TO PREVENT THE PASSAGE OF A 4" DIA. SPHERE (TYPICAL)
16	SECTIONAL OVERHEAD GARAGE DOOR W/ FROSTED TRANSLUCENT NATURAL LIGHT PENETRATING DOOR PANELS
17	2" WALL RECESS AT ALL WINDOW AND DOORS (TYPICAL)
18	ROOF PARAPET WALL LINE BEYOND (REAR ELEVATION)
19	EXPECTED FINISH ROOF LINE BEYOND
20	1" HORIZONTAL G.I. STUCCO SCREED W/ BRUSHED FINISH
21	PRE-FABRICATED ROOF TRUSS SYSTEM (SUBMITTED UNDER SEPERATE / DEFERRED PERMIT W/ 2 SLOPE TO ROOF DRAINS AND SCUPPER ASSEMBLYS (SEE ROOF PLANS SHEETS THIS SUBMITTAL)
22	FINISH ROOFING SEALANT AND ROOFING MATERIAL SEE ROOFING PLANS THIS SUBMITTAL)
23	R-38 AIR-IMPERMEABLE SPRAY OPEN CELL ATTIC INSULATION (SEE DETAIL "4" SHEET B1-A5.2)

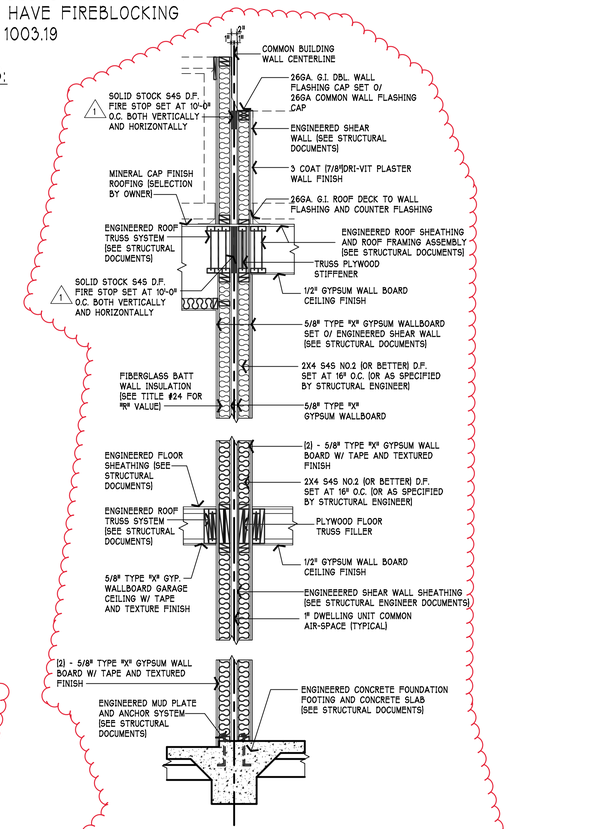

(2) 1 HOUR RATED LOAD BEARING INTERIOR WALL
USG UL U305 - FIRE RATING: 1 HOUR EA. WALL
SYSTEM STC: 33

COMMON FIREWALL FRAMING DETAIL

SCALE: 1" = 1'-0"

CROSS-SECTIONAL ELEVATIONS BUILDING "2"

SCALE: 1/4" = 1'-0"

NOTE:
THERMAL AND ACOUSTICAL INSULATION LOCATED ON OR WITHIN THE FLOOR-CEILING OR, ROOF-CEILING ASSEMBLIES, CRAWL-SPACES OR PARTITIONS SHALL HAVE A FLAME SPREAD RATING OF 25 OR LESS AND A SMOKE DENSITY RATING OF 450 OR LESS. (AS PER 2001 C.B.C. SECTION 707.)

NOTE: ALL PROJECT CROSS-SECTIONAL ELEVATIONS ARE DIAGRAMTIC ONLY. FOR FRAMING METHODS, BEAM AND JOIST SIZING SEE STRUCTURAL DRAWINGS.

ALL OPENINGS AROUND GAS VENTS, DUCTS AND PIPES AT CEILING AND FLOOR LEVELS SHALL HAVE FIREBLOCKING AS PER 2001 C.B.C. SECTION 708.2.1.

THESE DRAWINGS ARE THE PROPERTY OF OSITO HOLDINGS, LLC AND ARE INTENDED FOR USE SOLELY ON THE PROJECT TITLED HEREON. THESE DRAWINGS AS PROTECTED UNDER COPYRIGHT LAWS ARE NOT TO BE REPRODUCED IN WHOLE OR PART IN ANY MANNER WITHOUT THE EXPRESSED WRITTEN CONSENT OF THE DESIGNER. USE OF THESE DRAWINGS IS LIMITED TO THE SITE INTENDED AND THEIR USE AT ANY OTHER SITE, OR ON OTHER PROJECTS IS PROHIBITED EXCEPT BY PRIOR WRITTEN CONSENT OF THE DESIGNER. ALL REPRODUCTIONS OF THESE DRAWINGS, IN WHOLE OR PART, REMAIN UNDER THE OWNERSHIP OF THE DESIGNER AND SHALL BE RETURNED UPON COMPLETION OF THE PROJECT OR UPON REQUEST OF THE DESIGNER.

COPYRIGHT © 2020

OWNER / DEVELOPER:

OSITO HOLDINGS, LLC
P.O. BOX 2827
MESA, AZ 85214
(480) 646.6323

PROJECT:

TENNANT SQUARE
215 TENNANT AVENUE
MORGAN HILL, CA.
COUNTY OF
SANTA CLARA

DRAWING:

CROSS-SECTIONAL ELEVATIONS BUILDING "2"
AND FIREWALL FRAMING DETAIL

LICENSED ARCHITECT
ZUISHUANG CHEN
NO. C-28156
REN. 5/31/25
STATE OF CALIFORNIA

REVISIONS:
1 02.20.2023 PLAN CHECK RESPONSE

DATE: JUNE 03, 2024
SCALE: AS NOTED
DRAWN BY: G.E.MOORE
PROJ. MGR. G.E.MOORE
PROJECT FILE: 0.20-TENNANT
DRAWING: B2-A6

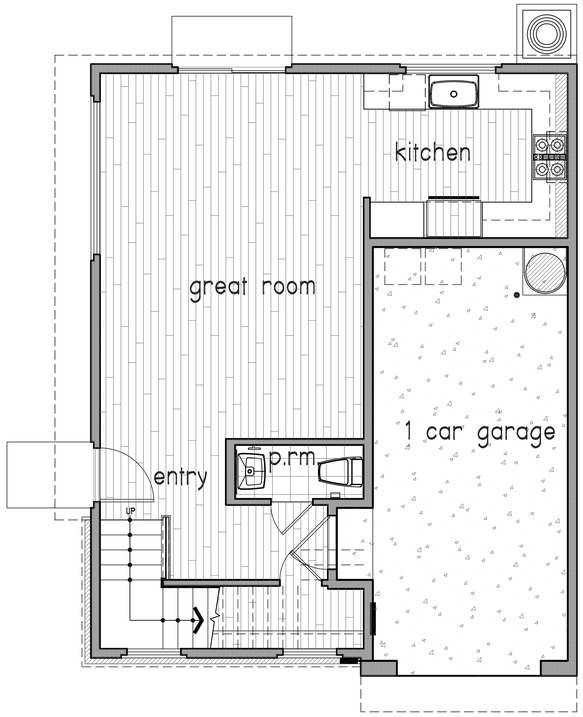

1st level floor plan

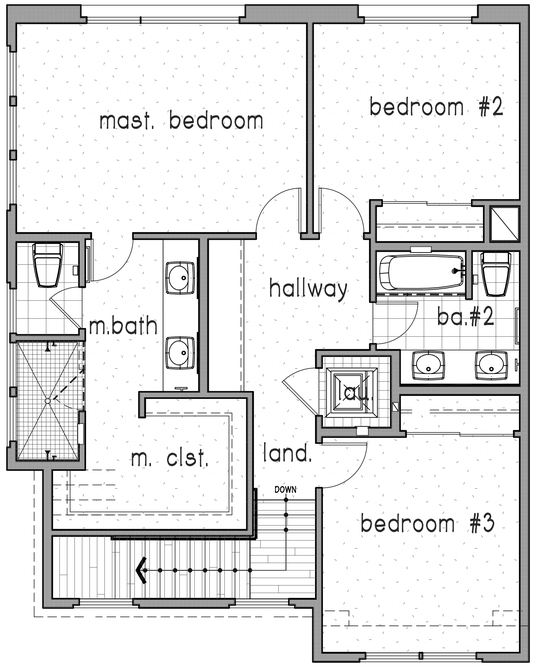

2nd level floor plan

CONCRETE DECK
ALL CONCRETE FINISHS AT PUBLIC AREAS ARE TO HAVE A NON-SLIP OR SKID FINISH (BROOM OR EQUAL)

TILE
"SALTILLO TILE" SET W/ THIN-SET AT ALL EXTERIOR DECK AREAS W/ 1" GROUT JOINT. SET W/ MASTIC AND HARDY BACKER-BOARD AT ALL INTERIOR FLOOR AREAS

CARPET
CARPET FLOORING W/ STAIN GUARD FINISH SET OVER 5/8" PAD. (ALLOW HOME OWNERS BUDGET OF $40.00 PER SQUARE YARD (TO INCLUDE INSTALLATION) (CARPET SELECTION BY HOME OWNERS)

WOOD FLOORING
RANDOM WIDTH & LENGTH RED OAK HARDWOOD FLOORING W/ CHERRY STAIN TO MATCH STAIR TREADS AND NOSING

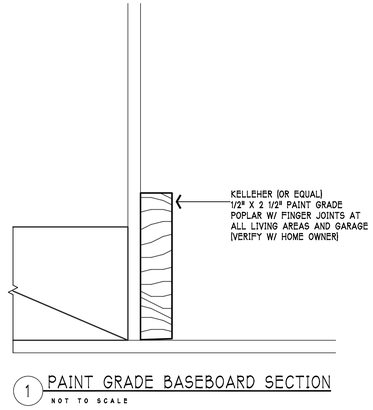

1 PAINT GRADE BASEBOARD SECTION
NOT TO SCALE

FLOOR PLAN "A" (floor finish plan)

SCALE: 1/4" = 1'-0"

THESE DRAWINGS ARE THE PROPERTY OF OSITO HOLDINGS, LLC AND ARE INTENDED FOR USE SOLELY ON THE PROJECT TITLED HEREON. THESE DRAWINGS AS PROTECTED UNDER COPYRIGHT LAWS ARE NOT TO BE REPRODUCED IN WHOLE OR PART IN ANY MANNER WITHOUT THE EXPRESSED WRITTEN CONSENT OF THE DESIGNER. USE OF THESE DRAWINGS IS LIMITED TO THE SITE INTENDED AND THEIR USE AT ANY OTHER SITE, OR ON OTHER PROJECTS IS PROHIBITED EXCEPT BY PRIOR WRITTEN CONSENT OF THE DESIGNER. ALL REPRODUCTINS OF THESE DRAWINGS, IN WHOLE OR PART, REMAIN UNDER THE OWNERSHIP OF THE DESIGNER AND SHALL BE RETURNED UPON COMPLETION OF THE PROJECT OR UPON REQUEST OF THE DESIGNER.

COPYRIGHT © 2020

OWNER / DEVELOPER:
OSITO HOLDINGS, LLC
P.O. BOX 2827
MESA, AZ 85214
(480) 646.6323

PROJECT:
TENNANT SQUARE
215 TENNANT AVENUE
MORGAN HILL, CA.
COUNTY OF
SANTA CLARA

DRAWING:
FLOOR PLAN "A" - FLOOR FINISH PLAN

LICENSED ARCHITECT
ZUISHUANG CHEN
NO. C-28156
REN. 5/31/25
STATE OF CALIFORNIA

REVISIONS:
1 02.20.2025 PLAN CHECK RESPONSE

DATE: JUNE 03, 2024
SCALE: AS NOTED
DRAWN BY: G.E.MOORE
PROJ. MGR. G.E.MOORE
PROJECT FILE: 0.20-TENNANT
DRAWING: 1 B2-A.7

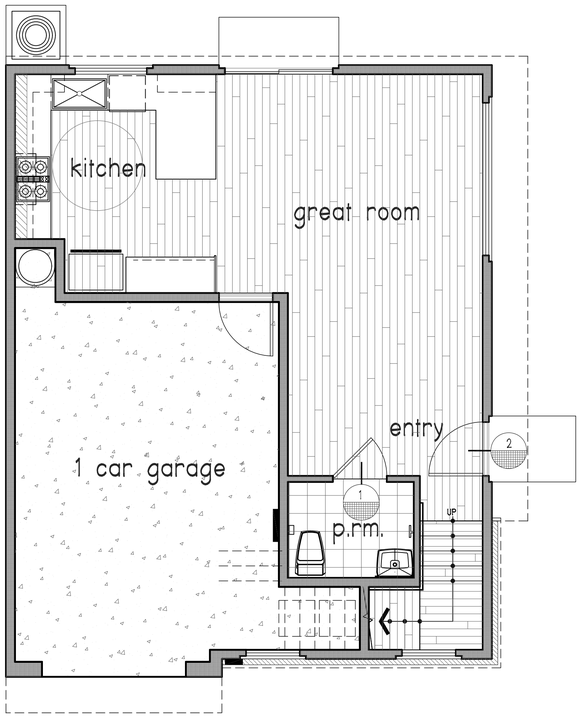

1st level floor plan

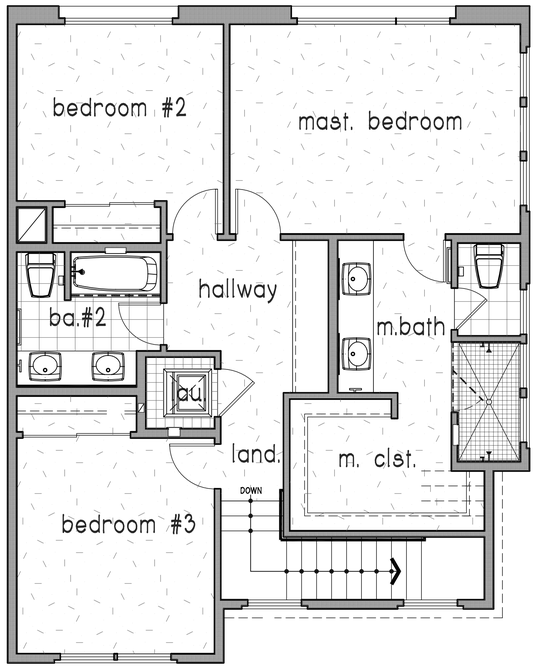

2nd level floor plan

FLOOR PLAN "A" - A.D.A. UNIT (floor finish plan)

SCALE: 1/4" = 1'-0"

CONCRETE DECK
ALL CONCRETE FINISHS AT PUBLIC AREAS ARE TO HAVE A NON-SLIP OR SKID FINISH (BROOM OR EQUAL)

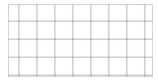

TILE
"SALTILLO TILE" SET W/ THIN-SET AT ALL EXTERIOR DECK AREAS W/ 1" GROUT JOINT. (SET W/ MASTIC AND HARDY BACKER-BOARD AT ALL INTERIOR FLOOR AREAS

CARPET
CARPET FLOORING W/ STAIN GUARD FINISH SET OVER 5/8" PAD. (ALLOW HOME OWNERS BUDGET OF $40.00 PER SQUARE YARD (TO INCLUDE INSTALLATION) (CARPET SELECTION BY HOME OWNERS)

WOOD FLOORING
RANDOM WIDTH & LENGTH RED OAK HARDWOOD FLOORING W/ CHERRY STAIN TO MATCH STAIR TREADS AND NOSING

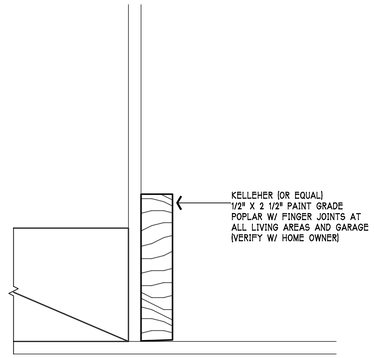

1 PAINT GRADE BASEBOARD SECTION
NOT TO SCALE

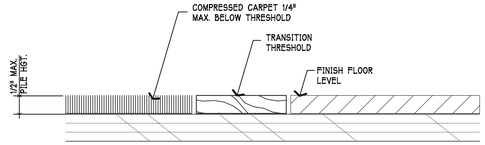

1 TRANSITION BETWEEN FLOOR FINISHES

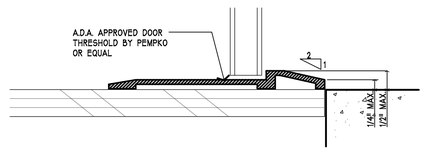

2 ENTRY DOOR THRESHOLD

FLOOR FINISH TRANSITIONS AT ACCESSIBLE ROUTE
NOT TO SCALE

THESE DRAWINGS ARE THE PROPERTY OF OSITO HOLDINGS, LLC AND ARE INTENDED FOR USE SOLELY ON THE PROJECT TITLED HEREON. THESE DRAWINGS AS PROTECTED UNDER COPYRIGHT LAWS ARE NOT TO BE REPRODUCED IN WHOLE OR PART IN ANY MANNER WITHOUT THE EXPRESSED WRITTEN CONSENT OF THE DESIGNER. USE OF THESE DRAWINGS IS LIMITED TO THE SITE INTENDED AND THEIR USE AT ANY OTHER SITE, OR ON OTHER PROJECTS IS PROHIBITED EXCEPT BY PRIOR WRITTEN CONSENT OF THE DESIGNER. ALL REPRODUCTINS OF THESE DRAWINGS, IN WHOLE OR PART, REMAIN UNDER THE OWNERSHIP OF THE DESIGNER AND SHALL BE RETURNED UPON COMPLETION OF THE PROJECT OR UPON REQUEST OF THE DESIGNER.

COPYRIGHT © 2020

OWNER / DEVELOPER:
OSITO HOLDINGS, LLC
P.O. BOX 2827
MESA, AZ 85214
(480) 646.6323

PROJECT:
TENNANT SQUARE
215 TENNANT AVENUE
MORGAN HILL, CA.
COUNTY OF
SANTA CLARA

DRAWING:
FLOOR PLAN "A" - ADA - (notes & tags only)

LICENSED ARCHITECT
ZHISHUANG CHEN
NO. C-28156
REN. 5/31/25
STATE OF CALIFORNIA

REVISIONS:
1 02.20.2025 PLAN CHECK RESPONSE

DATE: JUNE 03, 2024
SCALE: AS NOTED
DRAWN BY: G.E.MOORE
PROJ. MGR. G.E.MOORE
PROJECT FILE: 0.20-TENNANT
DRAWING: 1 B2-A71

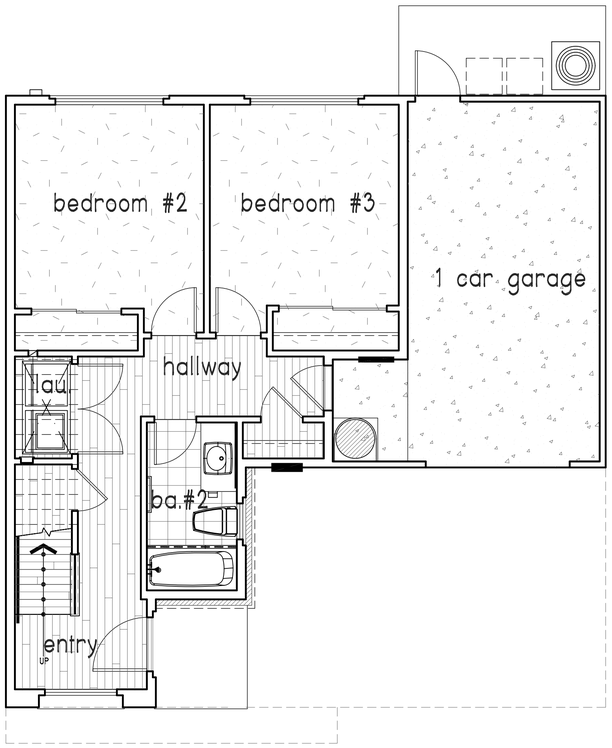

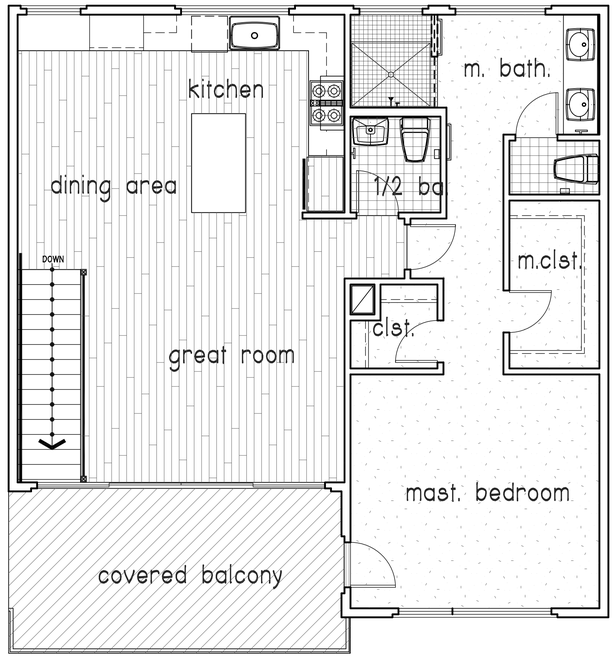

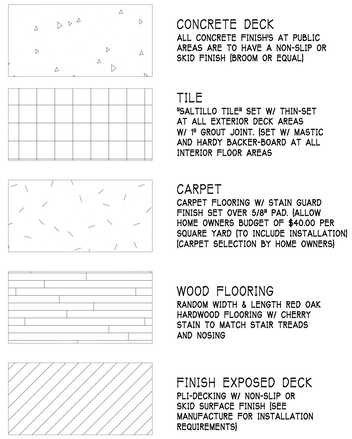

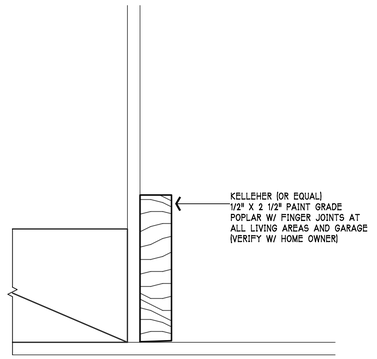

1 PAINT GRADE BASEBOARD SECTION
NOT TO SCALE

1ST LEVEL FLOOR FINISH PLAN

1 2ND LEVEL FLOOR FINISH PLAN

FLOOR PLAN "B" FINISH FLOORING PLAN

SCALE: 1/4" = 1'-0"

THESE DRAWINGS ARE THE PROPERTY OF OSITO HOLDINGS, LLC AND ARE INTENDED FOR USE SOLELY ON THE PROJECT TITLED HEREON. THESE DRAWINGS AS PROTECTED UNDER COPYRIGHT LAWS ARE NOT TO BE REPRODUCED IN WHOLE OR PART IN ANY MANNER WITHOUT THE EXPRESSED WRITTEN CONSENT OF THE DESIGNER. USE OF THESE DRAWINGS IS LIMITED TO THE SITE INTENDED AND THEIR USE AT ANY OTHER SITE, OR ON OTHER PROJECTS IS PROHIBITED EXCEPT BY PRIOR WRITTEN CONSENT OF THE DESIGNER. ALL REPRODUCTINS OF THESE DRAWINGS, IN WHOLE OR PART, REMAIN UNDER THE OWNERSHIP OF THE DESIGNER AND SHALL BE RETURNED UPON COMPLETION OF THE PROJECT OR UPON REQUEST OF THE DESIGNER.

COPYRIGHT © 2020

OWNER / DEVELOPER:

OSITO HOLDINGS, LLC
P.O. BOX 2827
MESA, AZ 85214
(480) 646.6323

PROJECT:

TENNANT SQUARE
215 TENNANT AVENUE
MORGAN HILL, CA.
COUNTY OF
SANTA CLARA

DRAWING:

FLOOR PLAN "B" - FINISH FLOORING PLAN

LICENSED ARCHITECT
ZUISHUANG CHEN
NO. C-28156
REN. 5/31/25
STATE OF CALIFORNIA

REVISIONS:
1 02.20.2025 PLAN CHECK RESPONSE

DATE: JUNE 03, 2024
SCALE: AS NOTED
DRAWN BY: G.E.MOORE
PROJ. MGR. G.E.MOORE
PROJECT FILE: 0.20-TENNANT
DRAWING: B2-A72

FULL FRONT EXTERIOR ELEVATION

SCALE: 1/8" = 1'-0"

PARTIAL FRONT EXTERIOR ELEVATION - DETAIL TAGS ONLY

SCALE: 1/4" = 1'-0"

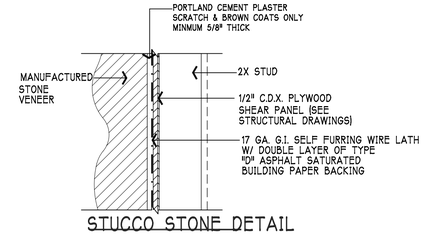

STUCCO STONE DETAIL

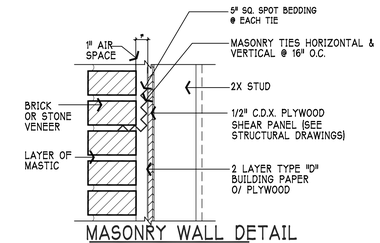

MASONRY WALL DETAIL

NOTE: ANCHORED MASONRY VENEER - USE 22 GA. GALVANIZED SHEET METAL ANCHOR TIES (W/ A LIP OR HOOK ON EXTENDED LEG ENGAGING NO. 9 GA. CONTINUOUS WIRE JOINT REINFORCEMENT) SPACED @ 24" O.C. MAXIMUM HORIZONTAL AND 16" O.C. MAXIMUM VERTICAL - ALTHOUGH SPACING SHOULD RESULT IN ONE ANCHOR PER MAXIMUM 2 SQ. FT. (E.G., ANCHORS @ 16" O.C. VERTICAL & HORIZONTAL).

MASONRY VENEER (STUCCO STONE) INSTALLED IN ACCORDANCE W/ ICBO EVALUATION REPORT #3568 AND PER MANUFACTURER'S INSTRUCTIONS.LISTED INSTALLATION MANUAL TO BE ON SITE FOR CONSTRUCTION AND INSPECTION USE.

MASONRY FRAMING DETAILS AND NOTES

"NOT TO SCALE"

THESE DRAWINGS ARE THE PROPERTY OF OSITO HOLDINGS, LLC AND ARE INTENDED FOR USE SOLELY ON THE PROJECT TITLED HEREON. THESE DRAWINGS AS PROTECTED UNDER COPYRIGHT LAWS ARE NOT TO BE REPRODUCED IN WHOLE OR PART IN ANY MANNER WITHOUT THE EXPRESSED WRITTEN CONSENT OF THE DESIGNER. USE OF THESE DRAWINGS IS LIMITED TO THE SITE INTENDED AND THEIR USE AT ANY OTHER SITE, OR ON OTHER PROJECTS IS PROHIBITED EXCEPT BY PRIOR WRITTEN CONSENT OF THE DESIGNER. ALL REPRODUCTINS OF THESE DRAWINGS, IN WHOLE OR PART, REMAIN UNDER THE OWNERSHIP OF THE DESIGNER AND SHALL BE RETURNED UPON COMPLETION OF THE PROJECT OR UPON REQUEST OF THE DESIGNER.

COPYRIGHT © 2020

OWNER / DEVELOPER:

OSITO HOLDINGS, LLC
P.O. BOX 2827
MESA, AZ 85214
(480) 646.6323

PROJECT:

TENNANT SQUARE
215 TENNANT AVENUE
MORGAN HILL, CA.
COUNTY OF
SANTA CLARA

DRAWING:

FRONT EXTERIOR ELEVATION BUILDINGS
"A" & "B" (DETAIL TAGS ONLY)

LICENSED ARCHITECT
ZUISHUANG CHEN
NO. C-28156
REN. 5/31/25
STATE OF CALIFORNIA

REVISIONS:

DATE: JUNE 03, 2024
SCALE: AS NOTED
DRAWN BY: G.E.MOORE
PROJ. MGR. G.E.MOORE
PROJECT FILE: 0.20-TENNANT
DRAWING: B2-A8

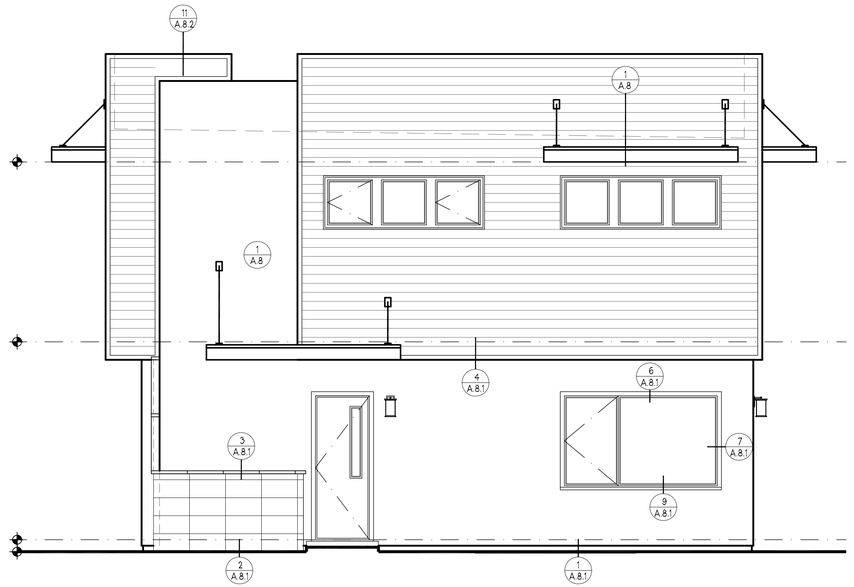

Right Side Elevation

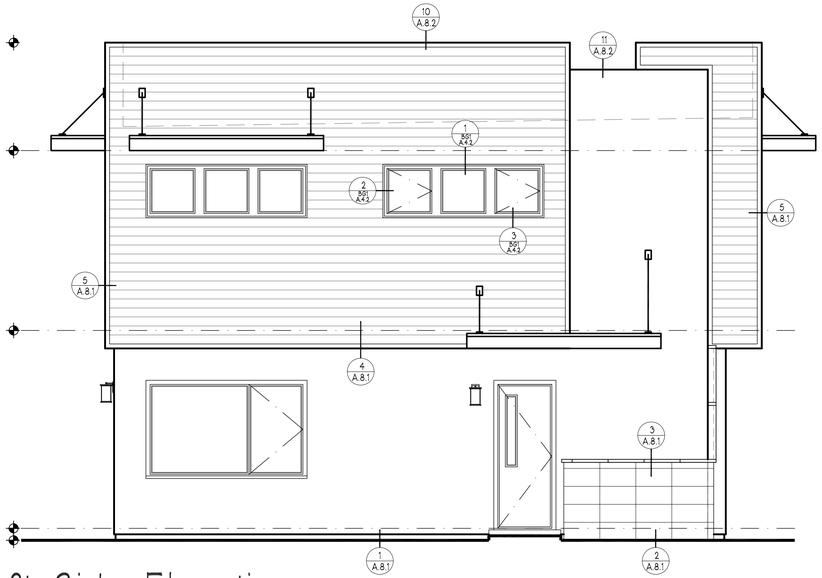

Left Side Elevation

END EXTERIOR ELEVATIONS

SCALE: 1/4" = 1'-0"

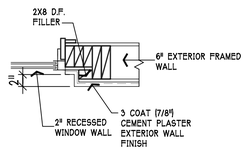

7. WINDOW JAMB FRAMING DETAIL

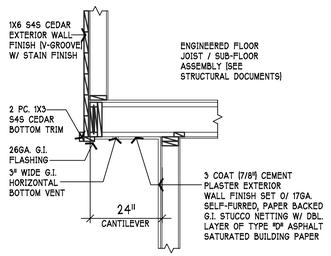

4. CANTILEVER TRIM FRAMING DETAIL

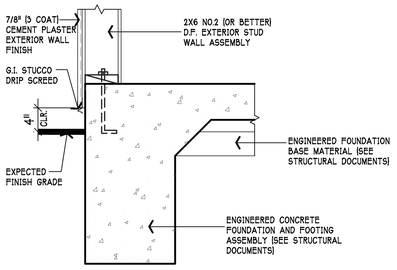

1. DRIP SCREED FRAMING DETAIL

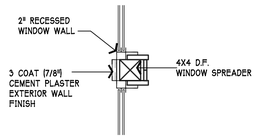

8. WINDOW FRAMING DETAIL

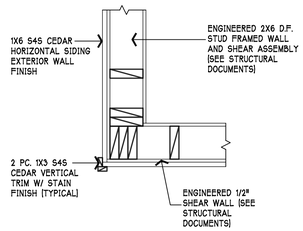

5. EXTER. WALL VERTICAL TRIM DETAIL

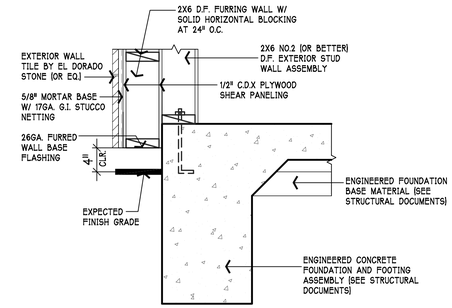

2. FURRED MASONRY WALL FRAMING DETAIL

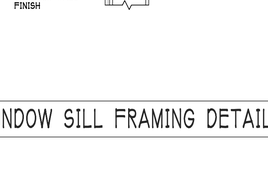

9. WINDOW SILL FRAMING DETAIL

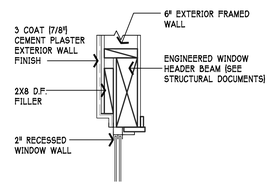

6. WINDOW HEADER FRAMING DETAIL

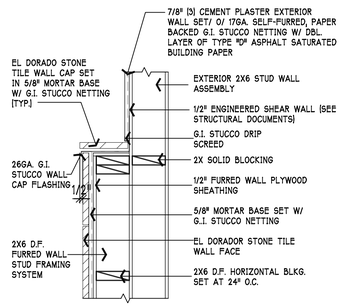

3. FURRED TILE WALL CAP FRAMING DETAIL

THESE DRAWINGS ARE THE PROPERTY OF OSITO HOLDINGS, LLC AND ARE INTENDED FOR USE SOLELY ON THE PROJECT TITLED HEREON. THESE DRAWINGS AS PROTECTED UNDER COPYRIGHT LAWS ARE NOT TO BE REPRODUCED IN WHOLE OR PART IN ANY MANNER WITHOUT THE EXPRESSED WRITTEN CONSENT OF THE DESIGNER. USE OF THESE DRAWINGS IS LIMITED TO THE SITE INTENDED AND THEIR USE AT ANY OTHER SITE, OR ON OTHER PROJECTS IS PROHIBITED EXCEPT BY PRIOR WRITTEN CONSENT OF THE DESIGNER. ALL REPRODUCTINS OF THESE DRAWINGS, IN WHOLE OR PART, REMAIN UNDER THE OWNERSHIP OF THE DESIGNER AND SHALL BE RETURNED UPON COMPLETION OF THE PROJECT OR UPON REQUEST OF THE DESIGNER.

COPYRIGHT © 2020

OWNER / DEVELOPER:

OSITO HOLDINGS, LLC
P.O. BOX 2827
MESA, AZ 85214
(480) 646.6323

PROJECT:

TENNANT SQUARE
215 TENNANT AVENUE
MORGAN HILL, CA.
COUNTY OF
SANTA CLARA

DRAWING:

SIDE / END EXTERIOR ELEVATIONS
(DETAIL TAGS ONLY)

LICENSED ARCHITECT
ZUISHUANG CHEN
NO. C-28156
REN. 5/31/25
STATE OF CALIFORNIA

REVISIONS:

DATE: JUNE 03, 2024
SCALE: AS NOTED
DRAWN BY: G.E.MOORE
PROJ. MGR. G.E.MOORE
PROJECT FILE: 0.20-TENNANT
DRAWING: B2-A81

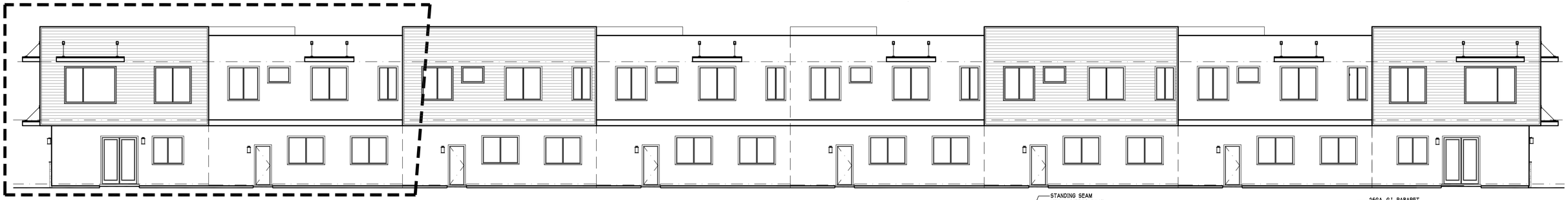

Rear Exterior Elevation

SCALE: 1/8" = 1'-0"

PARTIAL REAR EXTERIOR ELEVATION (DETAIL TAGS ONLY)

SCALE: 1/4" = 1'-0"

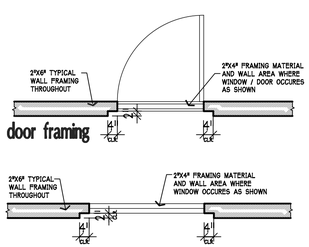

NOTE: WALL THICKNESS VARIES THE GENERAL CONTRACTOR IS TO FAMILERIZE HIM SELF W/ VARIOUS WALL THICKNESS'S.

EXTERIOR DOOR & WINDOW RECESSED DETAIL

SCALE: 1" = 1'-0"

NOTE: GUARDRAILS (STAIR RAILINGS) C.R.C. - R 312 - SHALL BE INSTALLED ALONG OPEN-SIDED WALKING SURFACES, INLCUDING STAIRS, RAMPS, AND LANDINGS, THAT ARE LOCATED MORE THAN 30" ABOVE THE FLOOR OR GRADE BELOW AT ANY POINT WITHIN 36" HORIZONTALLY TO THE EDGE OF THE OPEN SIDE. (C.R.C. R 312.1)

FOR RL-3 OCCUPANCIES MAX RISE FOR THE STAIRS IS 7.75" RISE (MAX) AND 10" RUN (MIN) STAIR RISE AND RUN ARE TO CONFORM TO C.R.C. R311.7.4, EXCEPTION 1. THE TRIANGULAR OPENINGS FORMED BY THE RISER, TREAD AND BOTTOM ELEMENT OF STAIR GUARDRAIL ARE TO BE OF SUCH A SIZE THAT A SPHERE 4" IN DIA. CANNOT PASS THROUGH - C.R.C. R312.3 EXCEPTION 1.

ALL VERTICAL STAIR RAILS ARE TO BE SET IN SUCH A MANNER SO AS TO PREVENT THE PASSAGE OF A 4" DIA. SPHERE (TYPICAL THROUGHT)

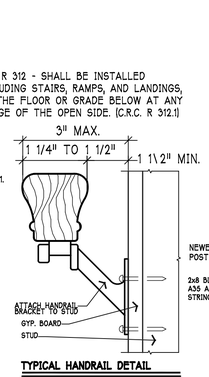

TYPICAL HANDRAIL DETAIL

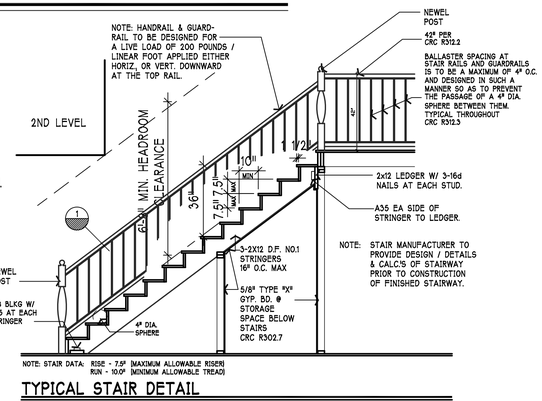

TYPICAL STAIR DETAIL

NOT TO SCALE

Stair Framing Details

SCALE AS NOTED

MISC. FRAMING DETAILS

SCALE: 1/4" = 1'-0"

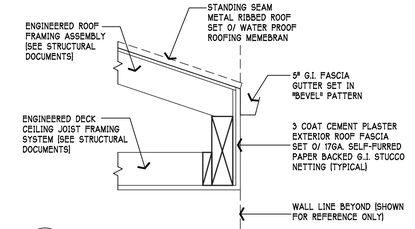

13. ROOF FASCIA FRAMING DETAIL

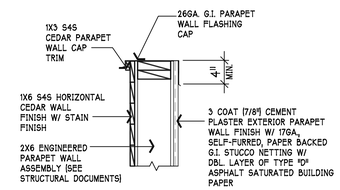

10. PARAPET WALL CAP FRAMING DETAIL

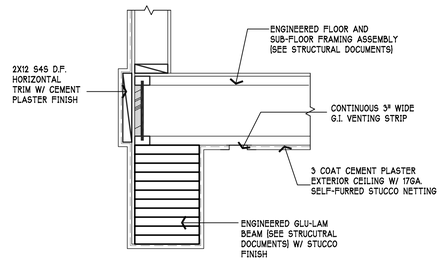

14. TRIM / BEAM FRAMING DETAIL

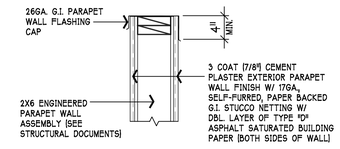

11. PARAPET WALL CAP FRAMING DETAIL

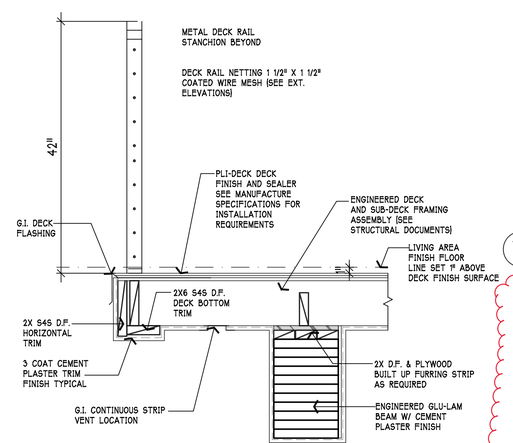

15. DECK RAIL AND TRIM DETAIL

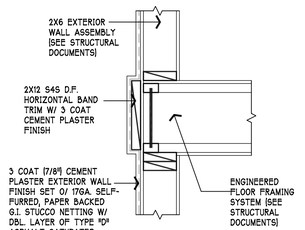

12. HORIZONTAL BAND TRIM DETAIL

⚠ NOTE: WHERE BALCONIES OR OTHER ELEVATED WALKING SURFACES ARE EXPOSED TO WATER FROM DIRECT OR BLOWING RAIN, SNOW OR IRRIGATION, AND THE STRUCTURAL FRAMING IS PROTECTED BY AN IMPERIOUS MOISTURE BARRIER, ALL ELEMENTS OF THE IMPERVIOUS MOISTURE BARRIER SYSTEM SHALL NOT BE CONCEALED UNTIL INSPECTED AND APPROVED (R109.1.5.3 C.R.C.)

⚠ BALCONY / DECK VENTILATION SCHEDULE:

BALCONY / DECK AREA: 166.500 S.F./150 = 1.110 SQ. FT. OF VENTING REQUIRED
1.110 SQ. FT. X 144 SQ. IN. = 159.840 SQ. IN. OF DECK VENTING REQUIRED
159.840 / 144 = 1.110 VENTS (1.110 VENTS REQUIRED)
PROVIDE: (1.110) - 3" X 120" CONTINUOUS G.I. VULCAN SOFFIT VENTS W/ A TOTAL OF 1.110 SQUARE FEET OF NFVA - (159.840 SQ. INCHES) (VULCAN SOFFIT CONTINUOUS FIRE & EMBER RESISTANT CHP 7A WUI (WILDLAND URBAN INTERFACE) COMPLIANT)

THESE DRAWINGS ARE THE PROPERTY OF OSITO HOLDINGS, LLC AND ARE INTENDED FOR USE SOLELY ON THE PROJECT TITLED HEREON. THESE DRAWINGS AS PROTECTED UNDER COPYRIGHT LAWS ARE NOT TO BE REPRODUCED IN WHOLE OR PART IN ANY MANNER WITHOUT THE EXPRESSED WRITTEN CONSENT OF THE DESIGNER. USE OF THESE DRAWINGS IS LIMITED TO THE SITE INTENDED AND THEIR USE AT ANY OTHER SITE, OR ON OTHER PROJECTS IS PROHIBITED EXCEPT BY PRIOR WRITTEN CONSENT OF THE DESIGNER. ALL REPRODUCTINS OF THESE DRAWINGS, IN WHOLE OR PART, REMAIN UNDER THE OWNERSHIP OF THE DESIGNER AND SHALL BE RETURNED UPON COMPLETION OF THE PROJECT OR UPON REQUEST OF THE DESIGNER.

COPYRIGHT © 2020

OWNER / DEVELOPER:

OSITO HOLDINGS, LLC
P.O. BOX 2827
MESA, AZ 85214
(480) 646.6323

PROJECT:

TENNANT SQUARE
215 TENNANT AVENUE
MORGAN HILL, CA.
COUNTY OF
SANTA CLARA

DRAWING:

REAR EXTERIOR ELEVATION BUILDINGS "A" & "B" (DETAIL TAGS ONLY)
MISC. FRAMING DETAILS

LICENSED ARCHITECT
ZUISHUANG CHEN
NO. C-28156
REN. 5/31/25
STATE OF CALIFORNIA

REVISIONS:
⚠ 02.20.2025 PLAN CHECK RESPONSE

DATE: JUNE 03, 2024
SCALE: AS NOTED
DRAWN BY: G.E.MOORE
PROJ. MGR. G.E.MOORE
PROJECT FILE: 0.20-TENNANT
DRAWING: B2-A82

GENERAL :

1. MATERIALS USED IN THE FIRE SAFING SYSTEMS ARE TO BE INSTALLED IN ACCORDANCE WITH THE MAUFACTURER'S WRITTEN INSTRUCTIONS PROVIDED WITH THE MATERIALS AND SHALL BE UL LISTED AS FIRE RATED PRODUCTS.

2. PER CBC 713.3.1.2 THE F RATINGS OF THROUGH HORIZONTAL PENETRATION OF FIRE STOPS SHALL NOT BE LESS THAN THE FIRE RESISTANCE OF THE ASSEMBLY PENETRATED AND SHALL BE SUITABLE FOR THE METHOD OF, AND MATERIALS SURROUNDING THE PENETRATION AND PENETRATING ITEM. THERE SHALL BE NO FLOOR PENETRATIONS FOR THIS PROJECT.

3. FIRE SAFING SYSTEMS ARE SPECIFIC FOR EACH VARYING CONDITION OF A FIRE RATED WALL OR FLOOR ASSEMBLY, THE PENETRATING ITEM(S), AND THE MATERIALS SELECTED TO PREVENT THE SPREAD OF FIRE THROUGH THE PENETRATION. THE SAFING MATERIALS DESIGNATED FOR USE IN FIRE ASSEMBLIES ARE NOT PROVIDED WITH SPECIFIC FIRE RATINGS. SAFING MATERIALS SHALL BE SELECTED PER EACH MANUFACTURERS TECHNICAL PRODUCT LITERATURE FOR EACH CONDITION ENCOUNTERED AND DOCUMENTED IN SHOP DRAWINGS FOR REVIEW BY THE MANUFACTURER, CONTRACTOR, BUILDING DEPARTMENT AND ARCHITECT.

ACCEPTABLE MANUFACTURERS OF FIRE STOPPING PRODUCTS SHALL BE AS FOLLOWS:

A. 3M FIRE PROTECTION PRODUCTS.
B. HILTI CONSTRUCTION CHEMICALS, INC.
C. SEE SPECIFICATIONS FOR ADDITIONAL ACCEPTABLE MANUFACTURERS.

PRODUCTS SHALL BE LISTED WITH A RECOGNIZED TESTING AGENCY SUCH AS ICBO, UNDERWRITER LABRATORIES OR WARNOCK HERSEY, "OR EQUAL" MANUFACTURERS WILL BE CONSIDERED IF TESTING AGENCY APPROVALS ARE PROVIDED.

4. DETAILS SHOWN ARE EXEMPLARY ONLY, AS EXACT CONDITIONS ARE UNKNOWN. ALL PENETRATIONS SHALL MEET THE CONDITIONS SET FORTH IN CBC SECTION 713
5. DETAILS SHOWN ARE TYPICAL DETAILS. IF FIELD CONDITIONS DO NOT MATCH REQUIREMENTS OF TYPICAL DETAILS, APPROVED ALTERNATE DETAILS SHALL BE UTILIZED. FIELD CONDITIONS AND DIMENSIONS NEED TO BE VERIFIED FOR COMPLIANCE WITH THE DETAILS, INCLUDING BUT NOT LIMITED TO THE FOLLOWING: * MINIMUM AND MAXIMUM WIDTH OF JOINTS * TYPE AND THICKNESS OF FIRE-RATED CONSTRUCTION. THE MINIMUM ASSEMBLY RATING OF THE FIRESTOP ASSEMBLY SHALL MEET OR EXCEED THE HIGHEST RATING OF THE ADJACENT CONSTRUCTION.
6. IF ALTERNATE DETAILS MATCHING THE FIELD CONDITIONS ARE NOT AVAILABLE, MANUFACTURERS ENGINEERING JUDGMENT DRAWINGS ARE ACCEPTABLE. DRAWINGS SHALL FOLLOW THE INTERNATIONAL FIRESTOP COUNCIL (IFC) GUIDELINES FOR EVALUATING FIRESTOP SYSTEMS ENGINEERING JUDGMENTS.
7. REFERENCES:
   * 2013 UNDERWRITERS LABORATORIES FIRE RESISTANCE DIRECTORY, VOLUMES 1 & 2
   * NFPA 101 LIFE SAFETY CODE
   * NFPA 70 - NATIONAL ELECTRIC CODE
   * ALL GOVERNING LOCAL AND REGIONAL BUILDING CODES
8. FIRESTOP SYSTEM INSTALLATION MUST MEET REQUIREMENTS OF ASTM E-814 (UL 1479) TESTED ASSEMBLIES THAT PROVIDE A FIRE RATING EQUAL TO THAT OF CONSTRUCTION BEING PENETRATED.
9. ALL RATED THROUGH-PENETRATION ASSEMBLIES SHALL BE PROMINENTLY LABELED WITH THE FOLLOWING INFORMATION:
   * ATTENTION: FIRE RATED ASSEMBLY
   * UL SYSTEM # * PRODUCT(S) USED
   * HOURLY RATING (F-RATING)
   * INSTALLATION DATE
10. FOR OUTLET BOXES REQUIRING PROTECTION, USE ONLY WALL OPENING PROTECTIVE MATERIALS, CATEGORY CLIV AS CLASSIFIED BY UNDERWRITER'S LABORATORIES, FIRE RESISTANCE DIRECTORY (VOLUME 1.)

FIRESTOPPING NOTES

NOT TO SCALE

12. RATED WALL PENETRATION NOTES

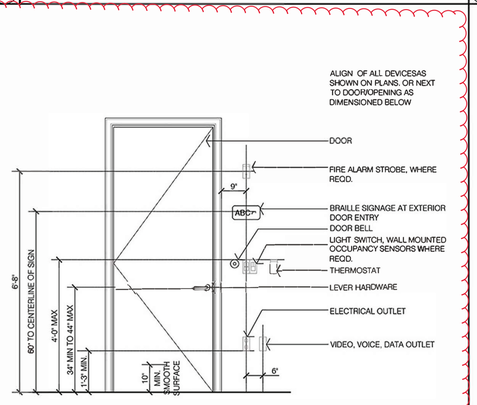

13. A.D.A. DEVICE MOUNTING HEIGHTS

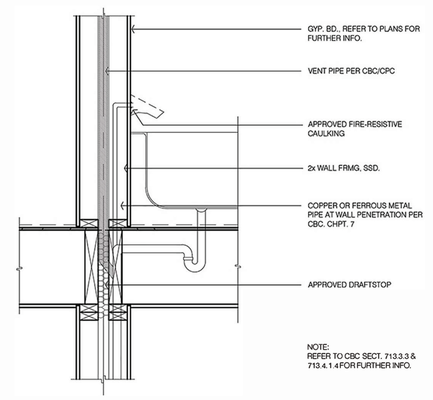

NOT TO SCALE

9. TUB PIPE AT RATED WALL

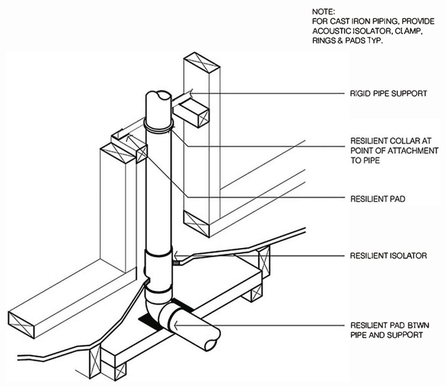

NOT TO SCALE

10. SOUND CONTROL PIPE SUPPORT

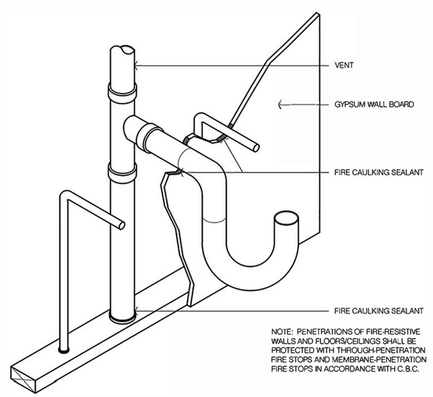

NOT TO SCALE

11. PIPE PENETRATION

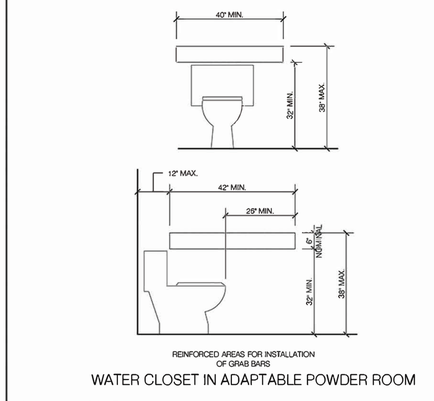

REINFORCED AREAS FOR INSTALLATION OF GRAB BARS

WATER CLOSET IN ADAPTABLE POWDER ROOM

NOT TO SCALE

6. REQUIRED GRAB BAR BACKING

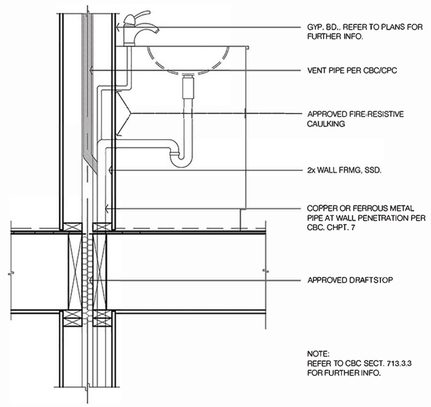

NOT TO SCALE

7. LAVITORY PIPE AT RATED WALL

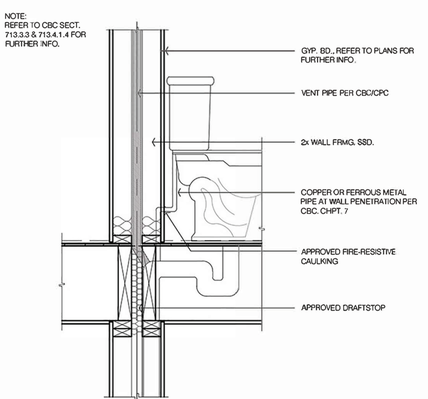

NOT TO SCALE

8. TOILET PIPE AT RATEED WALL

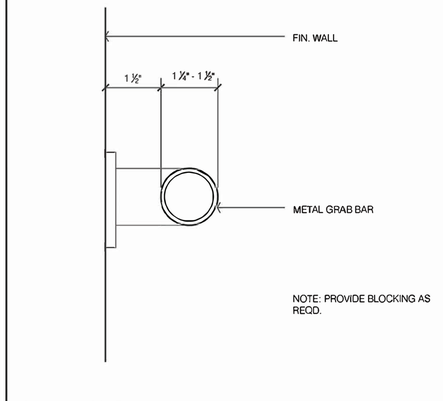

NOT TO SCALE

3. GRAB BAR REQUIREMENTS

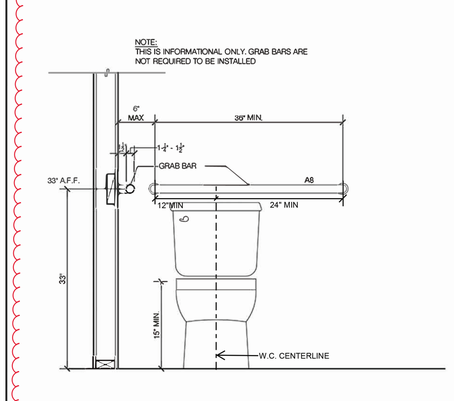

NOT TO SCALE

4. GRAB BARS AT WATER CLOSET

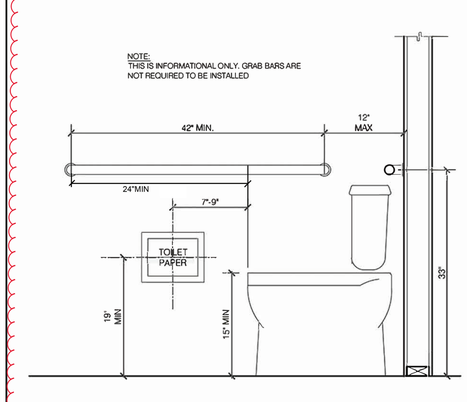

NOT TO SCALE

5. GRAB BARS AT WATER CLOSET W/ T.P. HOLDER

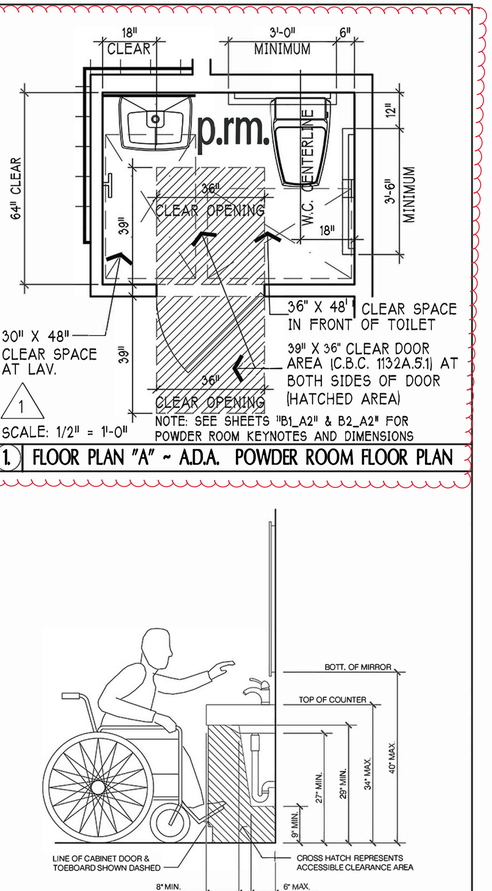

SCALE: 1/2" = 1'-0"

1. FLOOR PLAN "A" ~ A.D.A. POWDER ROOM FLOOR PLAN

NOTE:
EXPOSED HOT WATER LINES SHALL BE INSULATED

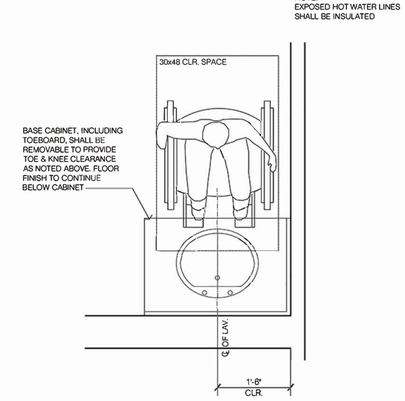

NOT TO SCALE

2. A.D.A. POWDER ROOM "CLEARANCE"

THESE DRAWINGS ARE THE PROPERTY OF OSITO HOLDINGS, LLC AND ARE INTENDED FOR USE SOLELY ON THE PROJECT TITLED HEREON. THESE DRAWINGS AS PROTECTED UNDER COPYRIGHT LAWS ARE NOT TO BE REPRODUCED IN WHOLE OR PART IN ANY MANNER WITHOUT THE EXPRESSED WRITTEN CONSENT OF THE OESIGNER. USE OF THESE DRAWINGS IS LIMITED TO THE SITE INTENDED AND THEIR USE AT ANY OTHER SITE, OR ON OTHER PROJECTS IS PROHIBITED EXCEPT BY PRIOR WRITTEN CONSENT OF THE OESIGNER. ALL REPRODUCTINS OF THESE DRAWINGS, IN WHOLE OR PART, REMAIN UNDER THE OWNERSHIP OF THE OESIGNER AND SHALL BE RETURNED UPON COMPLETION OF THE PROJECT OR UPON REQUEST OF THE OESIGNER.

COPYRIGHT © 2020

OWNER / DEVELOPER:

OSITO HOLDINGS, LLC
P.O. BOX 2827
MESA, AZ 85214
(480) 646.6323

PROJECT:

TENNANT SQUARE
215 TENNANT AVENUE
MORGAN HILL, CA.
COUNTY OF
SANTA CLARA

DRAWING:

A.D.A. DETAILS, NOTES
RATED FIREWALL PENETRATIONS AND ASSEMBLIES

LICENSED ARCHITECT
ZUISHUANG CHEN
NO. C-28156
REN. 5/31/25
STATE OF CALIFORNIA

REVISIONS:
1 01.30.2025 PLAN CHECK RESPONSE

DATE: JUNE 05, 2025
SCALE: AS NOTED
DRAWN BY: G.E.MOORE
PROJ. MGR. G.E.MOORE
PROJECT FILE: 0.20-TENNANT
DRAWING: B2-A83

GENERAL REQUIREMENTS

GENERAL REQUIREMENTS

1. Work performed shall comply with the following:
2. These General Requirements unless otherwise noted on plans or specifications.
3. Building Code - 2019 CBC
4. All applicable local, State and Federal Codes, Ordinances, Laws, regulations and Protective Covenants governing the site of work.
5. Standard Specifications of ASTM as noted herein and as required by the Building Code.
6. All work needs to be performed by qualified and experienced contractors familiar with this type of project.
7. In case of conflict, the more stringent requirement shall govern.
8. On site verification of all dimensions and conditions shall be the responsibility of the contractor and sub-contractors. Noted dimensions take precedence over scale of drawings.
9. Engineer or architect of record is to be notified immediately by the contractor should any question arise or any discrepancy be found pertaining to the working drawings and/or specifications.
10. No deviations from these requirements and structural details shall be made without the written approval of Gouvis Engineering Consulting Group. Approval by the inspector does not constitute authority to deviate from plans or specifications.
11. The design, adequacy, and safety of erection bracing, shoring, temporary supports, etc., is the sole responsibility of the contractor, and has not been considered by the architect or engineer. The contractor is responsible for the stability of the structure prior to the application of all shear walls, roof and floor diaphragms, and finish materials. The contractor shall provide the necessary bracing to provide stability prior to the application of the aforementioned materials. Observation visits to the site by the architect or structural engineer shall not imply the assumption of any responsibility in this regard.

   The builder has requested, contracted with and is compensating Gouvis Engineering Consulting Group for the limited services of providing the minimum structural engineering drawings required, when combined with the other builders' consultants drawings, to obtain a building permit for this project. These drawings are not intended to, nor do they detail all conditions, identify all materials, or define or limit the scope of work required to complete the project. The builder has requested, accepted, and represented that the he will select all materials and manufacturers, qualify and select all installers, direct all ways and means of construction, and provide all subcontractors additional information, above and beyond these drawings, required to complete the project in conformance with all governing agencies and the work will meet or exceed accepted industry standards.
12. Special inspection per Building Code Sec.1704 is required & applies to the types of work indicated on sheet SN-1B/SN-1C (Note: Special inspectors qualification and responsibilities should comply with Building Code Section 1701 Requirements.)
13. Structural analysis for this project is done per applicable Building Code at the time of design considering standard of care.
14. Upon completion of above by the engineer & prior to start of construction, contractor is responsible to check all dimensions, coordinate with the work of other consultants & other trades to ensure compliance with his/her requirements.
15. Gouvis Engineering shall have no liability for waterproofing or moisture transmission issues, whether related to concrete slabs, footings, foundations, or otherwise. Owner and Contractor shall be entirely responsible for such issues, and will defend and indemnify Gouvis Engineering against all such claims.

DESIGN CRITERIA

1. SOILS
   Foundation engineering has been predicated on data and recommendations contained in the soils report by: Quantum Geotechnical, Inc.
   SOILS REPORT NO. D071.G, DATE: 3/29/2018
   This report is considered part of the calculations and construction documents and is to be adhered to in all of its recommendations and requirements. Verify minimum foundation depth, width, reinforcing steel and additional expansive soil requirements with valid soils report and if they are any more restrictive, then they shall supersede the Gouvis Engineering Consulting Group minimums.
2. LATERAL LOADS:
   Risk Category: II
   Seismic Design Category: D
   Seismic Importance Factor (I) = 1
   Wind Speed: 110
   Wind Exposure: C
   Site Class = D-default
   S_S: 1.53 S_{DS}: 1.224 Fa: 1.2 C_{SX}: 0.188 C_{SY}: 0.188
   S_1: 0.6 S_{D1}: 0.680 Fv: 1.7 R_X: 6.500 R_Y: 6.500

   Structural Observation is required for structures greater than two stories above grade plane and assigned to Seismic Design Category "E". Contractor/Owner must contact Gouvis Engineering to schedule observations as needed basis prior to specific stage of that phase.
3. DESIGN LOADS:

Roof Load	Floor load	Deck load
Dead Load = 20 psf	Dead Load = 15 psf	Dead Load = 15 psf
Live Load = 20 psf	Live Load = 40 psf	Live Load = 60 psf
Total = 40 psf	Total = 55 psf	Total = 75 psf

4. LUMBER GRADES (U.N.O.)
   6x & 8x posts / beams / headers: DFL #1
   4x posts / beams / headers: DFL #2
   2x joists / rafters: DFL #2
   Studs: D.F.L. Stud Grade (up to 9'-0"), DFL #2 (taller than 9'-0")
   Top plates & Mud sills: DFL construction grade or better
   See structural wood note #11 for additional mud sill requirements
5. TYPICAL FLOOR/ROOF DECK/DECK SHEATHING
   23/32" APA rated Sturd-I-Floor T&G Exp I with min. span rating of 24" o.c. Refer to NER 108 for installation and conditions of use
   B.N.:10d common nails at 6" o.c.
   E.N.:10d common nails at 6" o.c.
   F.N.:10d common nails at 12" o.c.
   Use ring or screw shank nails and glue sheathing to framing using adhesives meeting APA specification AFG-01 or ASTM D3498. Apply glue in accordance with manufacturer's recommendations.
   As an alternate to 10d common nails, the following fastners can be used: Grabber plywood screws (ICC-ER-5280), or Simpson Strong-Tie quick drive screws (ICC-ER-1472), min 2" long @ 6" o.c. B.S., @ 6" o.c. E.S. and 12" o.c. F.S.
6. TYPICAL SLOPED/FLAT NON-ASSEMBLY ROOF SHEATHING
   15/32" APA rated sheathing Exp 1 with a min. panel index of 32/16.
   Refer to NER 108 for installation and conditions of use.
   B.N.:8d common nails at 6" o.c.
   E.N.:8d common nails at 6" o.c.
   F.N.:8d common nails at 12" o.c.
   *Note: All structural rated panels must be stamped by one of the following approved agencies, APA, PFS/TECO or Pittsburg.

SHOP DRAWINGS

1. Sufficient copies of shop drawings for any member or product designed by entity other than Gouvis Engineering Consulting Group shall be submitted to Gouvis Engineering Consulting Group prior to fabrication for review. Contractor shall submit shop drawings of reinforcement for concrete masonry walls, concrete components with compressive strength more than 2500 psi and structural steel to Gouvis Engineering Consulting Group to review and obtain approval prior to fabrication. Shop Drawings shall be original drawings prepared for the project specific information, drawn accurately to scale. Direct copies and modified reproductions of the Contract Documents will not be accepted. Allow sufficient time from the receipt of complete submittal for review and processing by Gouvis Engineering Consulting Group.
2. Review of shop drawings by Gouvis Engineering Consulting Group does not relieve the engineer responsible for the design or the contractor from compliance with Building Code.
3. Gouvis Engineering Consulting Groups review of the shop drawings consists of checking general conformance with structural drawings. Design accuracy of such product, dimensions and quantity of the product is not reviewed by Gouvis Engineering Consulting Group.

ISSUED DATE: 5/5/2022

SHEAR WALL SCHEDULE

2019 CALIFORNIA BUILDING CODE (1), (3)

SHEAR PANEL TYPE	SHEATHING (8)	EDGE NAILING (COMMON)	FIELD NAILING (COMMON) (9)	ALLOWABLE SHEAR (PLF)	SILL PLATE CONNECTION: 16d's SINKER	SILL PLATE CONNECTION: 1/4"Øx6" SDS SCREWS LSL & DF RIM BOARD	SILL PLATE CONNECTION: 1/4"Øx6" SDS SCREWS LVL RIM BOARD	FRAMING CLIPS A35's, LS50's OR LTP5's (5), (6)
1	3/8" APA rated	8 d's @ 6" O.C.	8 d's @ 12" O.C.	260 / (7) 220	@ 6" O.C.	@ 16" O.C.	@ 14" O.C.	@ 24" O.C.
2 (4) (2)	3/8" APA rated	8 d's @ 4" O.C.	8 d's @ 12" O.C.	380 / (7) 320	@ 4" O.C.	@ 12" O.C.	@ 10" O.C.	@ 16" O.C.
3 (4) (2)	3/8" APA rated	8 d's @ 3" O.C.	8 d's @ 12" O.C.	490 / (7) 410	(10) @ 3" O.C.	(10) @ 8" O.C.	(10) @ 7" O.C.	(10) @ 12" O.C.
4 (4) (2)	3/8" APA rated	8 d's @ 2" O.C.	8 d's @ 12" O.C.	640 / (7) 530	(10) @ 2" O.C.	(10) @ 6" O.C.	(10) @ 5" O.C.	(10) @ 10" O.C.
5 (4) (2)	15/32" APA rated Structural I	10 d's @ 2" O.C.	10 d's @ 12" O.C.	870	(10) 2 ROWS STAGG. @ 3" O.C.	(10) @ 5" O.C.	(10) @ 4" O.C.	(10) @ 6" O.C.

(1) SHEATHING PANEL JOINT AND SILL PLATE NAILING SHALL BE STAGGERED IN ALL CASES.
(2) PROVIDE 3" NOMINAL OR WIDER FRAMING AT ADJOINING PANEL EDGES WITH NAILS STAGGERED.
(3) STUDS ARE SPACED @ 16" O.C. MAX. UNLESS NOTED OTHERWISE ON PLAN.
(4) PERIODIC SPECIAL INSPECTION IS REQUIRED.
(5) USE CLIPS @ 6" O.C. ON SIMPSON STRONG WALL & HARDY FRAME (U.N.O.).
(6) USE SPACING PER SCHEDULE IF NUMBER OF FRAMING CLIPS ARE NOT SPECIFIED ON FRAMING PLANS.

(7) ALLOWABLE SHEAR ARE FOR STUDS SPACED @ 24" O.C. MAX.
(8) SHEATHING CONFORMS TO EITHER DOC PS 1 OR PS 2 STANDARDS.
(9) NAILING @ 6" O.C. WHEN STUDS ARE SPACED @ 24" O.C.
(10) FOR DOUBLE SIDED SHEAR PANELS:
a. USE HALF THE SPACING OF SILL PLATE FASTENERS STAGGERED FOR TYPE 3.
b. USE ONLY 1/4"Øx6" SDS SCREWS IN SCHEDULE AND WITH HALF THE SPACING, FOR TYPES 4 & 5.
c. SEE SHEAR TRANSFER DETAIL ON PLAN FOR FRAMING CLIP TYPES AND SPACING, FOR TYPES 3, 4 & 5.

REV. 11/14/2018

STRUCTURAL WOOD

NAILING SCHEDULE

DESCRIPTION OF BUILDING ELEMENTS	NUMBER & TYPE OF FASTENER	SPACING & LOCATION
	ROOF	
1. Blocking between ceiling joists, rafters or trusses to top plate or other framing below	3-8d common (2 1/2"x0.131"); or 3-10d box (3″ × 0.128″); or 3-3″ × 0.131″ nails;	Each end, toenail
Blocking between rafters or truss not at the wall top plate, to rafter or truss	2-8d common (2 1/2" x 0.131") 2-3″ × 0.131″ nails	Each end, toenail
	2-16 d common (3 1/2" x 0.162") 3-3″ × 0.131″ nails	Each end
Flat blocking to truss and web filler	16d common (3 1/2"x0.162") @6"o.c. 3″ × 0.131″ nails @ 6″ o.c.	Face nail
2. Ceiling joists to top plate	3-8d common (2 1/2"x0.131"); or 3-10d box (3″ × 0.128″); or 3-3″ × 0.131″ nails;	Each joist, toenail
3. Ceiling joist not attached to parallel rafter, lap over partitions (no thrust) (see Section 2308.7.3.1, Table 2308.7.3.1)	3-16d common (3 1/2"x0.162"); or 4-10d box (3″ × 0.128″); or 4-3″ × 0.131" nails;	Face nail
4. Ceiling joist attached to parallel rafter (heel joint) (see Section 2308.7.3.1, Table 2308.7.3.1)	Per Table 2308.7.3.1	Face nail
5. Collar tie to rafter	3-10d common (3″ × 0.148″); or 4-10d box (3″ × 0.128″); or 4-3″ × 0.131″ nails;	Face nail
6. Rafter or roof truss to top plate (See Section 2308.7.5, Table 2308.7.5)	3-10 common (3″ x 0.148"); or 3-16d box (3 1/2" x 0.135"); or 4-10d box (3" × 0.128″); or 4-3″ × 0.131 nails;	Toenail [c]
7. Roof rafters to ridge valley or hip rafters; or roof rafter to 2-inch ridge beam	2-16d common (3 1/2"x0.162"); or 3-10d box (3″ × 0.128″); or 3-3″ × 0.131″ nails;	End nail
	3-10d common (3"x0.148"); or 4-16d box (3 1/2"x0.135"); or 4-10d box (3″ × 0.128″); or 4-3″ × 0.131″ nails;	Toenail
	WALL	
8. Stud to stud (not at braced wall panels)	16d common (3 1/2″ × 0.162″);	24″ o.c. face nail
	10d box (3″ × 0.128″); or 3″ × 0.131″ nails;	16″ o.c. face nail
9. Stud to stud and abutting studs at intersecting wall corners (at braced wall panels)	16d common (3 1/2"x0.162");	16″ o.c. face nail
	16d box (3 1/2"x0.135");	12″ o.c. face nail
	3″ × 0.131″ nails;	12″ o.c. face nail
10. Built-up header (2″ to 2″ header)	16d common (3 1/2"x0.162");	16″ o.c. ea. edge, face nail
	16d box (3 1/2"x0.135")	12″ o.c. ea. edge, face nail
11. Continuous header to stud	4-8d common (2 1/2"x0.131") ; or 4-10d box (3″ × 0.128″)	Toenail
12. Top plate to top plate	10d box (3″ × 0.128″); or 3″ × 0.131″ nails;	12″ o.c. face nail
	16d common (3 1/2"x0.162")	16″ o.c. face nail
13. Top plate to top plate, at end joints	8-16d common (3 1/2"x0.162"); or 12-10d box (3″ × 0.128″); or 12-3″ × 0.131″ nails;	Each side of end joint, face nail (min. 24" lap splice length each side of end joint)
14. Bottom plate to joist, rim joist, band joist or blocking (not at braced wall panels)	16d common (3 1/2″ × 0.162″);	16" o.c. face nail
	16d box (3 1/2″ × 0.135″); or 3″ × 0.131″ nails;	12" o.c. face nail
15. Bottom plate to joist, rim joist, band joist or blocking at braced wall panels	2-16d common (3 1/2″ × 0.162″); or 3-16d box (3 1/2″ × 0.135″); or 4-3″ × 0.131″ nails;	16" o.c. face nail
16. Stud to top or bottom plate	4-8d common (2 1/2″ × 0.131″); or 4-10d box (3″ × 0.128″); or 4-3″ × 0.131″ nails;	Toenail
	2-16d common (3 1/2″ × 0.162″); or 3-10d box (3″ × 0.128″); or 3-3″ × 0.131″ nails;	End nail

NAILING SCHEDULE CONTINUATION

17. Top plates, laps at corners and intersections	2-16d common (3 1/2″ × 0.162″); or 3-10d box (3″ × 0.128″); or 3-3″ × 0.131″ nails;	Face nail
18. 1″ brace to each stud and plate	2-8d common (2 1/2″ × 0.131″); or 2-10d box (3″ × 0.128″); or 2-3″ × 0.131″ nails;	Face nail
19. 1″ × 6″ sheathing to each bearing	2-8d common (2 1/2″ × 0.131″); or 2-10d box (3″ × 0.128″)	Face nail
20. 1″ × 8″ and wider sheathing to each bearing	3-8d common (2 1/2″ × 0.131″); or 3-10d box (3″ × 0.128″)	Face nail
	FLOOR	
21. Joist to sill, top plate, or girder	3-8d common (2 1/2″ × 0.131″); or 3-10d box (3″ × 0.128″); or 3-3″ × 0.131″ nails;	Toenail
22. Rim joist, band joist, or blocking to top plate, sill or other framing below	8d common (2 1/2″ × 0.131″); or 10d box (3″ × 0.128″); or 3″ × 0.131″ nails;	6" o.c., toenail
23. 1"x6" subfloor or less to each joist	2-8d common (2 1/2″ × 0.131″); or 2-10d box (3″ × 0.128″)	Face nail
24. 2″ subfloor to joist or girder	2-16d common (3 1/2″ × 0.162″)	Face nail
25. 2″ planks (plank & beam –floor & roof)	2-16d common (3 1/2″ × 0.162″)	Each bearing, face nail
26. Built-up girders and beams, 2″ lumber layers	20d common (4″ × 0.192″)	32" o.c., face nail at top and bottom staggered on opposite sides
	10d box (3″ × 0.128″); or 3″ × 0.131″ nails;	24" o.c., face nail at top and bottom staggered on on opposite sides
	And: 2-20d common (4″ × 0.192″); or 3-10d box (3″ × 0.128″); or 3-3″ × 0.131″ nails;	Ends and at each splice, face nail
27. Ledger strip supporting joists or rafters	3-16d common (3 1/2″ × 0.162″); or 4-10d box (3″ × 0.128″); or 4-3″ × 0.131″ nails;	Each joist or rafter, face nail
28. Joist to band joist or rim joist	3-16d common (3 1/2″ × 0.162″); or 4-10d box (3″ × 0.128″); or 4-3″ × 0.131″ nails;	End nail
29. Bridging or blocking to joist, rafter or truss	2-8d common (2 1/2″ × 0.131″); or 2-10d box (3″ × 0.128″); or 2-3″ × 0.131″ nails;	Each end, toenail

WOOD STRUCTURAL PANELS (WSP), SUBFLOOR, ROOF AND INTERIOR WALL SHEATING TO FRAMING AND PARTICLEBOARD WALL SHEATING TO FRAMING

		Edges (inches)	Intermediate supports (inches)
30. 3/8″ – 1/2"	6d common or deformed (2″×0.113″) (subfloor and wall)	6	12
	8d common or deformed (2 1/2″×0.113″) (roof) RSRS_01(2 3/8" × 0.113") nail (roof)	6	12
	2 3/8″×0.113″ nail (subfloor and wall)	6	12
	2 3/8″ × 0.113″ nail (roof)	4	8
31. 19/32"-3/4"	8d common (2 1/2″ × 0.131″); or 6d deformed (2″ × 0.113″) (subfloor & wall)	6	12
	2 3/8″ × 0.113″ nail;	4	8
	8d common or deformed (2 1/2″×0.113″) (roof) RSRS_01(2 3/8" × 0.113") nail (roof)	6	12
32. 7/8"- 1 1/4"	10d common (3″ × 0.148″); or 8d deformed (2 1/2″ × 0.131″)	6	12
	OTHER EXTERIOR WALL SHEATING		
33. 1/2″ fiberboard sheathing [b]	1 1/2" galvanized roofing nail (7/16″ head diameter);	3	6
34. 25/32″ fiberboard sheathing [b]	1 3/4" galvanized roofing nail (7/16″ diameter head);	3	6
	WOOD STRUCTURAL PANELS, COMBINATION SUBFLOOR UNDERLAYMENT TO FRAMING		
35. 3/4" or less	8d common (2 1/2″ × 0.131″); or 6d deformed (2″ × 0.113″)	6	12
36. 7/8"-1"	8d common (2 1/2″ × 0.131″); or 8d deformed (2 1/2″ × 0.131″)	6	12
37. 1 1/8"-1 1/4"	10d common (3″ × 0.148″); or 8d deformed (2 1/2″ × 0.131″)	6	12
	PANEL SIDING TO FRAMING		
38. 1/2″ or less	6d corrosion-resistant siding (1 7/8″ × 0.106″); or 6d corrosion-resistant casing (2″ × 0.099″)	6	12
39. 5/8"	8d corrosion-resistant siding (2 3/8″ × 0.128″); or 8d corrosion-resistant casing (2 1/2″ × 0.113″)	6	12
	INTERIOR PANELING		
40. 1/4"	4d casing (1 1/2″ × 0.080″); or 4d finish (1 1/2″ × 0.072″)	6	12
41. 3/8"	6d casing (2″ × 0.099″); or 6d finish (Panel supports at 24")	6	12

For SI: 1 inch = 25.4 mm.
a. Nails spaced at 6 inches at intermediate supports where spans are 48 inches or more. For nailing of wood structural panel and particleboard diaphragms and shear walls, refer to Section 2305. Nails for wall sheathing are permitted to be common, box or casing.
b. Spacing shall be 6 inches on center on the edges and 12 inches on center at intermediate supports for nonstructural applications. Panel supports at 16 inches(20 inches if strength axis in the long direction of the panel, unless otherwise marked).
c. Where a rafter is fastened to an adjacent parallel ceiling joist in accordance with this schedule and the ceiling joist is fastened to the top plate in accordance with this schedule, the number of toenails in the rafter shall be permitted to be reduced by one nail.
d. RSRS_01 is a Roof Sheathing Ring Shank nail meeting specification in ASTM F-1667

MINIMUM QUALITY

1. All structural wood shall be of Douglas Fir Larch species, (19% maximum moisture content at the time of construction U.N.O.).
2. All machine bolts shall conform to ASTM A307. Holes for bolts should be drilled 1/16" larger than bolt diameter.
3. For non-shear wall applications, round washers shall be used on all bolts and should conform with ANSI/ASME B 18.22.1. Use min. 1 3/8" Ø x 7/64" thick washer for 1/2" Ø bolt, 1 3/4" Ø x 9/64" thick washer for 5/8" Ø bolt and 2 1/2" Ø x 11/64" thick washer for 1" Ø bolt. U.N.O.
4. All nails shall be sinker nails and staggered U.N.O., except as shown in Nailing Schedule.
5. Adhesive used to attach floor sheathing to framing elements shall conform with APA specification AFG-01.
6. Manufactured hardware specified on the drawings are to be Simpson Strong Tie (Unless specifically authorized in writing by Gouvis Engineering Consulting Group). Follow all manufacturer's requirements & recommendations for installation & handling of the product.
7. Do not bend the Simpson PA straps.
8. Fasteners specified on the drawings may be colored using manufacturer's brands that utilize the color coded system. Follow all code and manufacturer's requirements/recommendations for installation & handling of the products.

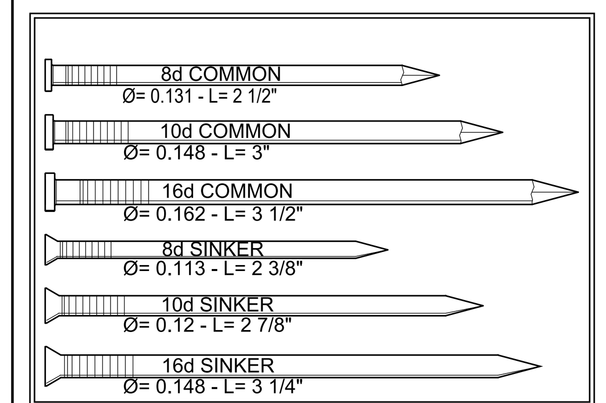

*ACTUAL NAIL SIZES

COLOR CHART FOR STRUCTURAL NAILS

TYPE OF FASTENER	SIZE & DIAMETER	COLORS
8d Cooler	2 3/8 X .113	YELLOW
8d Common	2 1/2 X .131	BLUE
16d Short	3 1/4 X .131	BLACK
10d Common	3 X 0.148	PURPLE
12d Common (16d Sinker)	3 1/4 X .148	GREEN
16d Common	3 1/2X .162	ORANGE

FRAMING

9. All framing, bracing, nailing, notching, drilling or boring shall be in accordance with Building Code unless more stringent requirements are specified or required by the local Jurisdiction.
10. Fabrication and handling of Glue-lam beams shall be per ANSI/AITC A 190.1 . Standard beams to bear legible APA-ENS or AITC grade stamp. An APA- EWS CRAN AITC Certificate of conformance for glued-laminated members should be submitted to the field inspector prior to installation and Glue-lam members shall be 24F-V4, DF/DF with standard camber on roof beams except cantilever end (U.N.O.). All cantilever ends and floor beams shall have zero camber u.n.o. All beams shall be fabricated using waterproof glue.
11. Fasteners in contact with preservative treated lumber and fire retardant treated wood shall be of hot-dipped zinc-coated galvanized steel, stainless steel, silicon bronze or copper. Exception: Plain carbon steel fasteners in sbx/dot and zinc borate preservative-treated wood in an interior, dry environment shall be permitted.
12. Stud walls perpendicular to a concrete or masonry wall shall be bolted to the concrete or masonry wall with 5/8" diameter x 8" A307 bolts at top, mid-height and bottom.
13. Structural information shown on framing plans is for the main structural elements. Non-structural elements shall be constructed per approved code requirements.
14. Conventional light framed construction requirements of chapter 23 should be followed as required.
15. Weight of the roof tile is considered to be 10 psf max. (total roof dead load of 19 psf). If roofing material exceeds this load, the framing contractor should notify Gouvis Engineering Consulting Group in writing prior to construction.
16. Top plates of all wood stud walls to consist of (2) 2x's the same width as the studs U.N.O. Top plates shall lap a minimum of 48" and be spliced with not less than 6-16d nails spaced not more than 12" o.c.
17. All shear panels shall have continuous sheathing material from one end to the other and from plate to plate as specified on the drawings. Contractor shall coordinate framing such that continuity of shear panels is assured.
18. All ledgers shall be spliced with ST22 strap, unless noted otherwise.
19. All shear transfer nailing shall be per drawings, and contractor shall provide proper notification for inspections to review the same.
20. Provide post/multiple studs at lower floor under post/multiple studs above. Each post/stud shall be fastened by Gypsum Wall Board w/ 5d cooler nails @ 7" o.c. U.N.O. on plan. Provide full width and depth compression block between floors at such locations.
21. All joist hangers shall be Simpson U hanger, all beam hangers shall be Simpson HU hangers U.N.O. on plan or detail. Follow manufacturer's recommendations for installation.
22. If a double sill plate is used at light-weight concrete flooring, then the framing contractor shall apply sill plate nailing to both sill plates, at 16" o.c. max. or as specified per schedule.
23. Building Code 2308.5.1 balloon framed walls (non-bearing) stud heights:
    - 2x4's @ 16" o.c. maximum 14'-0" height
    - 2x6's @ 16" o.c. maximum 20'-0" height
    - No multiples of 2x4"s are allowed to span more than 14'-0". Bearing walls exceeding 10'-0" must be designed case by case.
24. Headers: Use 4X4 for openings less than 16" at bearing walls without point loads. For non-bearing walls use 2x4 for openings up to 3'-0" max. Use (2)2x4 for openings up to 6'-0" max. Use 4x6 for openings up to 12'-0" max. U.N.O. (2-2x on edge can be substituted for 4x members).
25. Approved end-jointed lumber may be used interchangeably with solid sawn members of the same species and grade for buildings up to 2-story. When finger jointed lumber is marked "stud use only" or "vert use only" such lumber shall be limited to use for studs only. All finger jointed lumber should bear a certified finger jointed lumber grade stamp.
26. Wood truss manufacturer shall supply to the engineer and the building department calculations and shop drawings for approval of design loads, configuration (2 or 3 point bearing), and shear transfer, prior to fabrication. It shall be the responsibility of the manufacturer to obtain building department approval of calculations and shop drawings prior to fabrication.
27. Trusses shall be designed in accordance with the latest local Building Code for all loads imposed, including lateral loads and mechanical equipment loads.
28. All connections involving trusses shall be ICC approved and of adequate strength to resist stresses due to the loadings involved and shall be designed and specified by the truss manufacturer.
29. Total load and live load vertical deflections for roof member shall be limited to max. L/240, and L/360 U.N.O. Total load and live load vertical deflections for floor member shall be limited to max. L/360, and L/480 U.N.O.
30. Cross bridging and/or bracing shall be provided and detailed by the truss manufacturer as required to adequately brace all trusses.
31. Truss manufacturer to provide details which allow for normal deflection without imposing lateral loads on their supports (i.e., scissors trusses).
32. Truss manufacturer is responsible for:
    a. providing additional shear and drag trusses as shown on the framing plans.
    b. reviewing framing plans and structural details prior to fabrication of trusses and specifying hangers.
    c. meet the profile as indicated in the drawings.
    d. design trusses for deflection compatibility of the system to avoid hump and/or sag in roof or ceiling.
33. All trusses designed by truss manufacturer shall be designed to sustain all vertical, lateral and other pertinent loads, including bracing of top and bottom chords, in addition to any connections related to trusses. Contractor to coordinate with truss manufacturer.
34. All truss lumber shall be Douglas Fir Larch (U.N.O.). Roof truss lumber shall be either Douglas Fir Larch or Hem-Fir. (U.N.O.)
35. Each truss shall be legibly branded, marked or otherwise have permanently affixed thereto the following information located within two feet of the center of span on the face of the bottom chord:
    a. Identity of the company manufacturing the truss.
    b. The design load.
    c. The spacing of the trusses.

CEILING JOISTS

36. With dead load = 6 psf max. & live load = 10 psf max., 2x4 DF#2 ceiling joists @ 16" o.c. with 9'-6" span max. and 2x6 DF#2 ceiling joists @ 16" o.c. with 15'-0" span max. unless noted otherwise on plan. Contact Gouvis Engineering for other conditions.

SHEET INDEX

NO.	SHEET	SHEET NAME
1	SN1A	GENERAL NOTES & REQUIREMENTS
2	SN1B	GENERAL NOTES & REQUIREMENTS
3	SN2	STRUCTURAL DETAILS & NOTES
4	SN3	STRUCTURAL DETAILS & NOTES
5	S-1.1	OVERALL P.T. FOUNDATION PLAN BUILDING 1
6	S-1.1A	P.T. FOUNDATION PLAN BUILDING 1 - AREA A
7	S-1.1B	P.T. FOUNDATION PLAN BUILDING 1 - AREA B
8	S-1.2	OVERALL FLOOR FRAMING PLAN BUILDING 1
9	S-1.2A	FLOOR FRAMING PLAN BUILDING 1 - AREA A
10	S-1.2B	FLOOR FRAMING PLAN BUILDING 1 - AREA B
11	S-1.3	OVERALL ROOF FRAMING PLAN BUILDING 1
12	S-1.3A	ROOF FRAMING PLAN BUILDING 1 - AREA A
13	S-1.3B	ROOF FRAMING PLAN BUILDING 1 - AREA B
14	S-2.1	OVERALL P.T. FOUNDATION PLAN BUILDING 2
15	S-2.1A	P.T. FOUNDATION PLAN BUILDING 2 - AREA A
16	S-2.1B	P.T. FOUNDATION PLAN BUILDING 2 - AREA B
17	S-2.2	OVERALL FLOOR FRAMING PLAN BUILDING 2
18	S-2.2A	FLOOR FRAMING PLAN BUILDING 2 - AREA A
19	S-2.2B	FLOOR FRAMING PLAN BUILDING 2 - AREA B
20	S-2.3	OVERALL ROOF FRAMING PLAN BUILDING 2
21	S-2.3A	ROOF FRAMING PLAN BUILDING 2 - AREA A
22	S-2.3B	ROOF FRAMING PLAN BUILDING 2 - AREA B
23	PT1	POST TENSION MAT FOUNDATION DETAILS & NOTES
24	SD2	GENERAL DETAILS & NOTES
25	SD3	STRUCTURAL DETAILS
26	SD4	STRUCTURAL DETAILS

ABBREVIATION

A.B.	ANCHOR BOLT	BOTT.	BOTTOM
B.N.	BOUNDARY NAILING	P.T.	POST TENSION
E.N.	EDGE NAILING	F.H.	FULL HEIGHT
F.N.	FIELD NAILING	FTG.	FOOTING
TYP.	TYPICAL	SIMP.	SIMPSON
SIM.	SIMILAR	MFR.	MANUFACTURER
TR	TRIMMER	H.T.	HEIGHT
O.C.	ON CENTER	M.B.	MACHINE BOLT
MIN.	MINIMUM	REINF.	REINFORCEMENT
MAX.	MAXIMUM	(E)	EXISTING
FL BM	FLUSH BEAM	HD	HOLDOWN
DR BM	DROP BEAM	P.T.D.F	PRESSURE TREATED DOUGLAS FIR
HDR	HEADER	EXT.	EXTERIOR
G.T.	GIRDER TRUSS	INT.	INTERIOR
BLK'G	BLOCKING	U.N.O.	UNLESS NOTED OTHERWISE
W/	WITH	VERT.	VERTICAL
CONT.	CONTINUOUS	HORZ.	HORIZONTAL
CANT.	CANTILEVER	BTWN.	BETWEEN
SHT'G	SHEATHING	REQ'D	REQUIRED
ALT.	ALTERNATE	COND.	CONDITION
DBL.	DOUBLE	DIA.	DIAMETER
EA.	EACH	STD.	STANDARD
S.W.	SHEAR WALL	SEC.	SECTION
CONC.	CONCRETE	C'SINK	COUNTER SINK
ABV.	ABOVE	T&G	TONGUE AND GROOVE

GOUVIS engineering consulting group, inc. ®
15 Studebaker
Irvine
CA 92618

Irvine
tel 949.752.1612
fax 949.752.5321

Palm Springs
tel 760.323.5090

DATE SIGNED: 2/3/23

RESTRICTIVE NOTICE

THESE DESIGNS, DRAWINGS, AND SPECIFICATIONS ARE THE EXCLUSIVE PROPERTY OF GOUVIS ENGINEERING CONSULTING GROUP. THEY ARE THE SUBJECT OF COPYRIGHT AND OTHER LEGAL PROTECTION. THEY MAY BE USED ONLY BY THEIR INTENDED RECIPIENT AND ONLY FOR THE PROJECT DEPICTED HEREIN. NO PART OF THESE DRAWINGS ARE TO BE COPIED, TRANSFERRED, REPRODUCED, NOR CAN THEY BE USED, IN WHOLE OR IN PART, BY ANY OTHER PERSON OR FOR ANY OTHER PROJECT OR STRUCTURE, WITHOUT THE PRIOR EXPRESS WRITTEN CONSENT OF GOUVIS ENGINEERING CONSULTING GROUP

© 2017 GOUVIS ENGINEERING CONSULTING GROUP INC. - ALL RIGHTS RESERVED

PROJECT:
Tenant Square

DEVELOPER:
Osito Holdings LLC

ARCHITECT:

LOCATION:
Morgan Hill
Santa Clara
CA

REVISIONS

NO.	DATE	DESCRIPTION
1	02/02/23	BLDG DEPT.

SHEET NAME:
GENERAL NOTES & REQUIREMENTS

PROJECT NUMBER:
66074

ENGINEER: GE
DRAFTER: GE

SHEET NUMBER:
SN1A

GENERAL REQUIREMENTS

SPECIAL INSPECTIONS AND VERIFICATIONS BY A SPECIAL INSPECTOR ARE REQUIRED FOR CONCRETE CONSTRUCTION AND SPECIFIED IN THE FOLLOWING TABLE

EXCEPTION: CONCRETE FOOTINGS SUPPORTING WALLS OF LIGHT-FRAME WOOD BUILDING OF 3-STORIES OR LESS AND THE STRUCTURAL DESIGN OF FOOTINGS IS BASED ON A SPECIFIED COMPRESSIVE STRENGTH f'c NO GREATER THAN 2500 psi.

SPECIAL INSPECTION TABLE FOR CONCRETE CONSTRUCTION

TYPE	CONTINUOUS SPECIAL INSPECTION	PERIODIC SPECIAL INSPECTION	Reference Standard	CBC/IBC Reference
1. Inspect reinforcement, including prestressing tendons, and verify placement	—	✓	ACI 318 Ch. 20,25.2,25.3, 26.6.1-26.6.3	1908.4
2. Reinforcing bar welding:	—			—
a. Verify weldability of reinforcing bars other than ASTM A 706;		✓	AWS D1.4 ACI 318: 26.6.4	
b. Inspect single-pass fillet welds, maximum 5/16"; and		✓		
c. Inspect all other welds	✓			
3. Inspect anchors post-installed in concrete.	—	✓	ACI 318: 17.8.2	—
4. Inspect anchors post-installed in hardened concrete members.				—
a. Adhesive anchors installed in horizontally or upwardly inclined orientations to resist sustained tension loads.	✓		ACI 318: 17.8.2.4	
b. Mechanical anchors and adhesive anchors not defined in 4.a.		✓	ACI 318: 17.8.2	
5. Verify use of required design mix.	—	✓	ACI 318: Ch 19, 26.4.3, 26.4.4	1904.1,1904.2, 1908.2, 1908.3
6. Prior to concrete placement, fabricate specimens for strength tests, perform slump and air content tests, and determine the temperature of the concrete.	✓	—	ASTM C 172 ASTM C 31 ACI 318: 26.5, 26.12	1908.10
7. Inspect concrete and shotcrete placement for proper application techniques.	✓	—	ACI 318: 26.5	1908.6, 1908.7, 1908.8
8. Verify maintenance of specified curing temperature and techniques.	—	✓	ACI 318: 26.5.3-26.5.5	1908.9
9. Inspect prestressed concrete for:			ACI 318: 26.10	—
a. Application of prestressing forces; and	✓	—		
b. Grouting of bonded prestressing tendons.	✓	—		
10. Inspect erection of precast concrete members.	—	✓	ACI 318: 26.9	—
11. Verify in-situ concrete strength, prior to stressing of tendons in post-tensioned concrete and prior to removal of shores and forms from beams and structural slabs.	—	✓	ACI 318: 26.11.2	—
12. Inspect formwork for shape, location and dimensions of the concrete member being formed.	—	✓	ACI 318: 26.11.1.2(b)	—

LARR Report list

HTS22	LABC/ICC-ESR 2105	HDC10	LABC/ICC-ESR 2330
CMST 12	LABC/ICC-ESR 2105	HTT 5	LABC/IAPMO-ER 130
CMST 14	LABC/ICC-ESR 2105	HDU 4	LABC/ICC-ESR 2330
CS 14	LABC/ICC-ESR 2105	HDU 8	LABC/ICC-ESR 2330
CS 16	LABC/ICC-ESR 2105	HDU 11	LABC/ICC-ESR 2330
CMST 16	LABC/ICC-ESR 2105	HDU 14	LABC/ICC-ESR 2330
ST 6224	LABC/ICC-ESR 2105	HHDQ 11	LABC/ICC-ESR 2330
ST 6236	LABC/ICC-ESR 2105	HHDQ 14	LABC/ICC-ESR 2330
MST 48	LABC/ICC-ESR 2105	HDQ 8	LABC/ICC-ESR 2330
MST 60	LABC/ICC-ESR 2105	HD 12	LABC/IAPMO-UES ER 143
MST 37	LABC/ICC-ESR 2105	HD 19	LABC/IAPMO-UES ER 143
MSTC 52	LABC/ICC-ESR 2105	MASA/ MASAP	LABC/ICC-ESR 2555
ST 22	LABC/ICC-ESR 2105	SET-XP	LABC/ICC-ESR 2508
PARALLAM (PSL) TIMBERSTRAND (LSL)	LABC/ICC-ESR 1387	TITEN HD	LABC/ICC-ESR 2713
Simpson PDPAWL-MG	LABC/ICC-ESR 2138	Simpson Strong Wall SSW	LABC/ICC-ESR 1679
MPBZ	LABC/ICC-ESR 3050	LTP/A35/LS/H2.5	LABC/ICC-ESR 3096

ISSUED DATE: 5/5/2022

SPECIAL INSPECTION:

1. In addition to the regular inspection the following items will also require special inspection in accordance with Sec.1704, unless exempted by the exceptions of Sec.1704.2, of the Building Code
2. Soils compliance prior to the foundation inspection, post-tensioned foundation, high strength steel and concrete.
3. All inspections and tests shall be performed by a qualified testing agency retained by the owner.
4. The special inspector shall be qualified and approved by the building department and acceptable to the architect.
5. The special inspector shall observe work assigned for conformance to the approved design drawings and specifications.
6. The special inspector shall furnish an inspection report to the building department, engineer and architect of record. Copies of the report shall be available at the job site at all times.
7. Final reports for all inspections and testing must be provided by the special inspector. Final reports shall document completion of all inspections and correction of all noted discrepencies.
8. The duties of the special inspector shall be in conformance with the requirements of section 1704 of the latest edition of the CBC.
9. Contractor shall be responsible for all expenses due to any premature notification of inspection which results in additional site visits.
10. Failure of notification by the contractor for inspection on a timely basis may result in complete removal and replacement of all work performed at contractors expense.
11. Site visits by the structural engineer do not constitute an inspection.
12. For special inspection of wood diaphragm and shear walls, contact Gouvis Engineering for schedule. Special inspection is required for the following items:

SPECIAL INSPECTION BY A SPECIAL INSPECTOR FOR EXISTING SITE SOIL CONDITIONS, FILL PLACEMENT & LOAD BEARING REQUIREMENTS SHALL BE PERFORMED PER THE FOLLOWING TABLE.

Exception: Special inspection for existing site soil condtions per table below is not required if allowable soil bearing pressure used for design is ≤ 1500 psf, soils report is not required by building offical, and there is no controlled fill placement on existing building site

SPECIAL INSPECTION TABLE FOR EXISTING SITE SOIL CONDITIONS

TYPE	Continuous Special Inspection	Periodic Special Inspection
1. Verify materials below footings are adequate to achieve the design bearing capacity per soils report.	—	✓
2. Verify excavations are extended to proper depth & have reached proper material per soils report.	—	✓
3. Perform classification & testing of compacted fill materials per soils report.	—	✓
4. Verify use of proper materials, densities & lift thicknesses during placement & compaction of compacted fill per soils report. Exception: Special inspection is not required during placement of controlled fill having a total depth of 12 inches or less.	✓	—
5. Prior to placement of compacted fill, inspect subgrade & verify that site has been prepared properly per soils report.	—	✓

SPECIAL INSPECTION BY A SPECIAL INSPECTOR FOR THE CONSTRUCTION OF HORIZONTAL WOOD DIAPHRAGMS, WOOD SHEAR WALLS & MANUFACTURED SHEAR WALLS ARE REQUIRED & SPECIFIED IN THE FOLLOWING TABLE:

SPECIAL INSPECTION TABLE FOR WOOD DIAPHRAGM & SHEAR WALLS

	INSPECTION TASK	NOT APPLICABLE	FREQUENCY OF INSPECTION		REFERENCE FOR CRITERIA
			Continuous	Periodically	CBC/IBC SECTION
Horizontal wood diaphragms with edge nail spacing equal to or closer than 4" o.c.	Sheathing types, grade thickness, span rating, and nail types, nail sizes & spacing.			✓	Sec. 1705.12.2
Wood shear walls with edge nail spacing equal to or closer than 4" o.c.	Sheathing types, grade thickness, wall nail types, nailing sizes and spacing.			✓	Sec. 1705.12.2
	Sill nail types, size and spacing.			✓	
	Anchor bolt sizes & spacing.			✓	
	Holdown types & their connections to shear walls & foundation/framing			✓	
	Wall end post sizes.			✓	
	Shear transfer connector types & spacing. Drag strut connections to shear walls.			✓	
Manufactured shear walls, Hardy panels, Simpson steel & Wood Strong walls.	Panel types, nailing, bolting, Anchoring, wall top plate screw types, sizes & spacing, holddown & drag strut connections to walls/panels.			✓	Sec. 1704 Sec. 1705.12.2 Sec. 1705.12.3
Metal-plate -connected wood trusses with overall heights of 60 inches or greater or with a clear span of 60 feet or greater	Verify that the installation of the permanent individual truss member restraint/bracing has been installed in accordance with the approved truss submittal package			✓	Sec. 1705.5.2

MISCELLANEOUS

1. Grout under base plates shall be non-shrink type and shall have compressive strength equal to or greater than the concrete or masonry supporting it.
2. All grade beams shall be poured monolithically for their entire length.
3. All reinforcing to be accurately and securely located prior to pouring concrete or grouting masonry.
4. All horizontal reinforcement to have matching dowels at corners of walls. All vertical reinforcement to have matching dowels to footing, unless otherwise noted.
5. SHEET ROCK ON FRAMING
Stacked sheet rock loading shall be limited to the following quantities in any one room:
5/8" : 16 individual 4x10 sheets (8 pairs of sheets)
1/2" : 20 individual 4x10 sheets (10 pairs of sheets)
The shoring of the floor supporting stacked sheet rock is required if the number of sheet rock exceeds the quantities listed above.
6. Automatic sprinkler system specification & details by others
7. The contractor is responsible for taking measures to mitigate the effects of building shrinkage in structures consisting of 3 or more stories of wood framed construction. As an alternate, use MC-15 studs for top plates, sole plates and conventional joists (No I-Joist):
The lower 3 levels of 5 story bldgs.
The lower 2 levels of 4 story bldgs.
The lower first level of 3 story bldgs.
8. Structural information as Beams, Columns, Posts, Guiderails, Hoist Beams, Foundation Pits, etc. shown on structural drawings related to roof/floor system of elevator's hoistways and machine rooms are preliminary and may be changed or items added once we are provided with elevator submittals.

POST TENSION MAT FOUNDATION NOTES:

SPECIAL FIELD CONSTRUCTION NOTES
1. CONTRACTOR SHALL VERIFY TENDON LENGTH'S AND STRESSING TAIL LENGTH'S PRIOR TO FABRICATING CABLES. COLOR CODING OF CABLES IS ONLY TO ASSIST TENDON PLACEMENT, AND MAY BE REVISED AT THE CONTRACTORS OPTION. ANY DISCREPANCIES IN, BUT NOT LIMITED TO, DIMENSIONS, TENDON COUNT AND LENGTH'S, COLOR CODING, AND ELONGATION DESIGNATION SHALL BE BROUGHT TO THE ATTENTION OF GOUVIS ENGINEERING PRIOR TO FABRICATION.
2. STRESSING END AND DEAD END OF TENDONS MAY BE REVERSED FROM THAT SHOWN ON THE PLANS AT CONTRACTOR'S OPTION. FOR ANCHORAGE OF ENDS AND GENERAL TENDON SUPPORT LAYOUT, SEE DETAIL (1/PT-1).
3. PROVIDE #3 x 24" DOWEL @ 24" O.C. AND 12" FROM CORNERS AT ALL CONCRETE STOOPS PORCHES, PATIOS AND OTHER ATTACHMENTS WHEN CAST INDEPENDENT OF POST-TENSION SLAB UNLESS NOTED OTHERWISE.
4. ROOF/FLOOR FRAMING, AND/OR HEAVY CONSTRUCTION LOADS ARE STRICTLY PROHIBITED TO BE IMPOSED ON SLABS PRIOR TO STRESSING. BEGIN WALL FRAMING 3 DAYS AFTER CONCRETE POUR, IF CYLINDER BREAKS INDICATE MIN. 2000 PSI STRENGTH.
5. SPECIAL INSPECTION IS REQUIRED FOR THE TENDON INSTALLATION, CONCRETE PLACEMENT AND STRESSING OF POST TENSION TENDONS.
6. FINISH GRADE AROUND THE PERIMETER OF POST TENSION SLAB SHALL BE CONSTRUCTED SUCH THAT RAIN AND IRRIGATION WATER IS DRAINED AWAY FROM THE SLAB.
7. A MINIMUM OF THREE (3) CYLINDERS/SLAB SHALL BE TAKEN TO DETERMINE CONCRETE STRENGTH.
TENDON AND ANCHORAGE INSTALLATION NOTES
1. BULKHEAD BY LOCATING THE CENTER OF THE STRAND BUNDLES PER THE DIMENSIONS ON THE STRAND PLAN. (NOTE: BULKHEAD DOES NOT HAVE TO BE BRACED LATERALLY, THERE IS NO TENSION ON THE TENDONS UNTIL AFTER THE CONCRETE IS POURED).
2. LAY ALL THE STRANDS IN ONE DIRECTION, THEN LAY ALL THE STRANDS IN THE OTHER DIRECTION. REFERRING TO THE PLAN, SELECT INDIVIDUAL COLOR-CODED COILS OF STRAND AND UNROLL THEM IN PLACE. BEGINNING AT THE DEAD-END, IF THERE IS ONE. AT LEAST 18" OF STRAND MUST PASS THE BULKHEAD AT EACH STRESSING END.
3. PLACE ANCHOR AND POCKET FORMER INTO BULKHEAD AND NAIL ANCHORS WITH 2 NAILS TIGHT TO THE BULKHEAD. 16d's RIND SHANK RECOMMENDED.
4. TIE DEAD-END IF ANY, IN PLACE APPROXIMATELY 1 1/2" FROM BULKHEAD SUPPORT SO THAT THE CENTERLINE OF THE ANCHORAGES IS APPROXIMATELY 3 1/2" BELOW TOP OF SLAB.
5. AT STRESSING ENDS, REMOVE WRAPPING TO APPROXIMATELY 6" INSIDE THE BULKHEAD. DO NOT REMOVE GREASE. SLIDE END OF STRAND THROUGH THE HOLE IN THE ANCHOR AND THROUGH THE BULKHEAD. LENGTH OF EXPOSED TENDON AT DEAD END IS NOT TO EXCEED 12".
6. STRAIGHTEN TENDONS, CURVING THEM SMOOTHLY AROUND HOLES OR OBSTRUCTIONS. PLACE SUPPORTS AT CABLE INTERSECTIONS AND TIE THE STRANDS TOGETHER.
7. CHECK STRANDS FOR TEARS IN PLASTIC WRAPPING AND REWRAP. ALL TEARS IN WRAPPING 12" OR LONGER SHALL BE REPAIRED.
8. TENDON PLASTIC WRAPPING SHALL BE CONTINUOUS OVER ENTIRE LENGTH TO BE UNBONDED AND PREVENT INTRUSION OF CEMENT PASTE OR LOSS OF COATING MATERIALS DURING CONCRETE PLACEMENT.
TENDON STRESSING PREPARATION NOTES
1. REMOVE POCKET FORMER.
2. CHECK INSIDE EACH POCKET HOLE, MAKING SURE, THAT EXPOSED PORTION OF ANCHORAGE IS CLEAR. IF A FILM OF CEMENT PASTE HAS INTRUDED, REMOVE IT WITH A SCRAPER OR SCREWDRIVER.
3. INSERT A PAIR OF GRIPPERS BY HAND INTO EACH ANCHORAGE.
4. PUT A CRAYON MARK ON THE STRAND AT THE EDGE OF THE SLAB, OR AT A CONSTANT DIMENSION FROM THE EDGE OF THE SLAB. A YELLOW CRAYON AND A WOODEN CARPENTERS RULE ARE RECOMMENDED.
TENDON STRESSING PROCEDURE NOTES
1. THE STRESSING OPERATION MUST BE UNDER THE IMMEDIATE CONTROL OF A PERSON EXPERIENCED IN THIS TYPE OF WORK; HE/SHE MUST EXERCISE CLOSE CHECK AND RIGID CONTROL OF ALL OPERATIONS.
2. THE STRESSING OPERATION SHALL NOT COMMENCE UNTIL CONCRETE TEST CYLINDERS, CURED UNDER JOB SITE CONDITIONS, HAVE BEEN TESTED AND INDICATE THAT THE CONCRETE IN THE MEMBER HAS ATTAINED THE STRENGTH CALLED FOR ON THE STRUCTURAL DRAWINGS OR 2000 psi (MIN.).
3. ALL PRESTRESSING STEEL SHALL BE STRESSED BY MEANS OF DSI, OR OTHER EQUAL HYDRAULIC JACKS, EQUIPPED WITH ACCURATE READING, CALIBRATED HYDRAULIC PRESSURED GAUGES. A CALIBRATION CHART SHALL ACCOMPANY EACH JACK.
4. THE POST-TENSIONING OPERATION WILL BE SO CONDUCTED THAT ACCURATE ELONGATION OF THE PRESTRESSING STEEL CAN BE RECORDED AND COMPARED WITH COMPUTATIONS SUBMITTED AND APPROVED BY THE STRUCTURAL ENGINEER.
5. INDEPENDENT INSPECTOR TO RECORD ALL JACKING FORCES AND ELONGATIONS AND SUBMIT REPORTS TO GOUVIS ENGINEERING FOR STRUCTURAL ENGINEER'S APPROVAL ONLY IF STRESSED TENDON ELONGATION EXCEEDS TOLERANCE.
6. THE MAXIMUM JACKING FORCE TO OVERCAME FRICTION SHALL NOT EXCEED 80% OF THE ULTIMATE FORCE OF THE TENDON.
(41.3 x .80 = 33.0 kips).
7. TENDONS SHALL BE ANCHORED AT A FORCE NOT TO EXCEED 70% OF THE ULTIMATE FORCE OF THE TENDON.
(41.3 x .70 = 28.9 kips).
8. THE STRESSING OPERATIONS PROCEED AS FOLLOWS:
- REMOVE GROMMETS AT THE STRESSING ENDS; CHECK INSIDE EACH GROMMET HOLE TO MAKE SURE THAT THE ANCHORAGES ARE FREE FROM CEMENT PASTE; IF NOT REMOVE PASTE FROM ANCHORAGE WITH A SCREWDRIVER.
- INSERT WEDGES, SIDE BY SIDE, BY HAND INTO ANCHORAGE.
- PUT A PAINT MARK ON EACH STRAND AT THE SLAB EDGE OR AT A FIXED DISTANCE FROM THE EDGE OF THE SLAB.
- STRESS THE STRAND AT 33 kips.
- SEAT THE WEDGES IN THE ANCHORAGE USING THE HYDRAULIC SEATING DEVICE BUILT INTO THE RAM.
- REMOVE THE RAM.
- MEASURE FINAL ELONGATION. RECORD ELONGATION.
9. IF INCONSISTENCIES BETWEEN THE CALCULATED ELONGATION, THE MEASURED ELONGATION, AND THE JACK GUAGE READING OCCUR, THE JACK-GUAGE-PUMP UNIT SHALL BE RECALIBRATE. AN AGREEMENT OF WITHIN 7% UNDER TO 7% OVER SHALL BE SATISFACTORY.
10. TENDONS STRESSED FROM ONE END ONLY SHALL BE SO INDICATED ON THE PLACING DRAWINGS. TENDONS THAT ARE STRESSED FROM BOTH ENDS WHEN REQUIRED AND NOTED ON PLAN NEED TO BE STRESSED FROM BOTH ENDS SIMULTANEOUSLY IF IT CAN BE SHOWN THAT THE WEDGES ON THE OPPOSITE END ARE PRE-SEATED AND CAUSE NO SLIPPAGE OF THE TENDON. THESE TENDONS MAY HAVE MORE ELONGATION AT ONE END THAN AT THE OPPOSITE END. ELONGATION FROM BOTH ENDS MUST TOTAL THE ELONGATION SHOWN ON THE PLACING DRAWINGS. TENDONS EXCEEDING 100 FEET IN LENGTH'S MAY NEED TWO-WAY STRESSING.
11. PARTIAL (OR EARLY) STRESSING OF TENDONS, FOR TENDON LENGTHS LONGER THAN 150 FT., & WHEN NOTED ON PLAN, SHALL CONSIST OF INITIAL STRESSING SUCH DESIGNATED TENDONS TO A FORCE OF 8000 LB AT 2 DAYS AFTER CONCRETE PLACEMENT AND THEN FOLLOWING UP WITH FINAL STRESSING.
12. ELONGATIONS SHOWN ARE BASED ON .70 f pu. MEASURED ELONGATION 7% UNDER TO 7% OVER IS ACCEPTABLE. IF MEASURED ALONGATION EXCEEDS TOLERANCE, CONTACT GOUVIS ENGINEERING.
13. TAKE SAFETY PRECAUTIONS AS NECESSARY; DO NOT PERMIT WORKMAN TO STAND BEHIND JACKS WHILE STRESSING TENDONS.
STRESSING HOLES SEALING NOTES
1. THE REUSABLE PLASTIC GROMMET FORMS A HOLE 2" (INCH) DIAMETER WHICH IS TO BE FILLED AND SEALED WATER TIGHT.
2. USING A CUTTING TORCH, BURN OFF EXCESS STRAND 1/2" TO 3/4" BACK IN HOLE. BE CAREFUL NOT TO DIRECT FLAME ON GRIPPERS. USE A LARGE HOT FLAME AND COMPLETE THE CUT AS QUICKLY AS POSSIBLE.
3. AFTER TENDONS HAVE BEEN BURNED OFF, THE CONCRETE CONTRACTOR SHALL DRYPACK BLOCKOUTS WITHIN 10 DAYS. A NON-METALLIC EPOXY MIX SHALL BE USED FOR THIS PURPOSE. (AN ALTERNATE STIFF MIXTURE OF TWO PARTS CEMENT TO ONE PART SAND IS ACCEPTABLE).
TECHNICAL PARAMETERS NOTES
- DEFORMED MILD REINFORCING GRADE 40 (#3) STEEL SHALL CONFORM TO ASTM A-615GRADE 60 (#4 & BIGGER)
- STRANDS SHALL CONFORM TO ASTM A-416
- PLASTIC SHEATHING SHALL BE FORMED BY A CONTINUOUS EXTRUSION PROCESS, WHICH APPLIES A SEAMLESS POLYETHYLENE PLASTIC JACKET OF 40 MILS MINIMUM THICKNESS.
- PROPERTIES OF 7-WIRE STRAND 1/2" DIAMETER
- f pu (ULTIMATE) = 270 ksi
- AREA = 0.153 in^2
- F (ULTIMATE) = 41,300 lbs
- Es = 28,500,000 psi
- MAXIMUM FORCE (AT 0.8 f pu) = 33,000 lbs (FRICTION OVERCAME)
- MAXIMUM ANCHOR FORCE (AT 0.7 f pu) = 28,900 lbs

STRUCTURAL STEEL

GENERAL
1. All structural steel materials and construction shall conform to the requirements specified in Building Code, Chapter 22 & Reference.

MATERIALS
2. Steel shall be primed with a rust resistance primer & should conform to ASTM A36 (fy=36 ksi) as a minimum, unless otherwise noted. All W shapes to be ASTM A992. (fy=50 ksi)
3. Steel pipe shall conform to ASTM A53, Grade B (Fy=35 ksi).
4. Round HSS tubing shall conform to ASTM A500 Grade B (Fy=42 ksi)
5. Rectangular and square HSS tubing shall conform, to ASTM A500, Grade B (Fy=46 ksi).
6. All structural welding procedures and materials shall conform to Building Code, Section 2204.1. All welding shall be by the shield metal arc welding process or the submerged arc welding process using E7OXX-low hydrogen electrodes, unless otherwise noted.
7. All bolts for connections of steel members shall conform to Building Code, Section 2204.2 & ASTM A325N, unless otherwise noted. Holes for bolts should be drilled or punched & shall be 1/16" larger than bolt diameter.
8. Prefabricated steel moment frames per manufacturer. Steel moment frame manufacturer shall submit shop drawing, design calculations, and approved moment frame test report (ICC, IAMPO, or test per Appendix S of AISC SEISMIC PROVISION) to GOUVIS ENGINEERING for review.

WELDS
9. All shop welding and fabrication must be done in a shop approved by a special inspection agency which is approved by the Building Official. All field welding must be performed by a certified welder and a special inspector shall continuously inspect all structural field welding. Both shall be approved by the Building Official.

CONCRETE MASONRY

GENERAL
1. All concrete masonry materials and construction shall be in accordance with Building Code, Chapter 21.

MATERIALS
2. All materials making up finished concrete masonry construction shall conform to standards required by Building Code Sec. 2103.
3. Mortar shall be type M or S as applicable and conforming with ASTM C270 and shall be proportioned per Article 2.1 & 2.6A of Specification for Masonry Structures (TMS 602-16).
4. Grout shall comply with Article 2.2 of TMS 602-16 and shall attain a minimum compression strength at 28 days of 2000 psi or the required compression, f'm, whichever is greater. The compressive strength of grout shall be determined in accordance with ASTM C-1019.
5. Concrete masonry units shall conform to ASTM C90 for load bearing concrete masonry units. Concrete brick shall conform to ASTM C55, Specifications for Concrete Building Brick.
6. Grade N concrete bricks are for use as architectural veneer and facing, limited to in exterior walls.
7. Grade S concrete bricks are for general use where moderate strength and resistance to frost action and moisture penetration is required.

STRENGTH
8. The specified compressive strength of masonry, f'm, shall be 2000 psi, unless noted otherwise.

SPECIAL INSPECTION
9. Special inspection for concrete masonry construction shall be carried out in accordance with Building Code Section 1704 and requirements in Special Inspection tables on sheet SN-1. Masonry compressive strength, f'm shall be verified by Unit strength method or Prism test method prior to and during construction as described in Building Code, Section 2105.

REINFORCED CONCRETE

GENERAL
1. All reinforced concrete materials and construction shall conform to Building Code, chapter 19.

MATERIALS
2. Cement shall conform to Section 1903 of Building Code and shall correspond to that on which the selection of concrete proportions were based.
3. Concrete aggregates shall conform to Building Code Section 1903.
4. Portland cement shall be Type I or II conforming to ASTM C150. For concrete in contact with soil containing sulfate $So_4 \geq 0.1\%$ by weight use Type II cement, containing sulfate $So_4 \geq 0.2\%$ by weight useType V cement. Weight percentage of So_4 shall be per soils report.
Refer to Section 1904 of the Building Code for special exposure conditions as required by soils engineer & see corrosion engineer's recommendations for concrete exposed to corrosive elements.
5. Reinforcing steel shall conform to ASTM A615. Grade 40 for sizes #3 and Grade 60 for sizes #4 and larger.
6. Dowels shall be equal in size and spacing.

STRENGTH
7. The (28 days) concrete compressive strength, f'c, shall be min 2500 psi U.N.O.
8. The (28 days) concrete compressive strength, f'c, for concrete in contact with soil with weight percentage of sulfate $(So_4) \geq 0.10$ shall be 4000 psi, and with weight percentage of sulfate $(So_4) \geq 0.20$ shall be 4500 psi. Special inspection is not required.
9. Special inspection is required for concrete with f'c > 2500 psi unless the use of concrete with f'c > 2500 psi is solely for item #8 above.
10. All reinforcing, dowels, holdowns, and other inserts shall be secured in position and approved by the local building official prior to the pouring of any concrete.
11. Min. concrete cover for reinforcing:
a- Concrete, placed against earth not formed - 3"
b- Concrete formed or troweled - 2"
c- Walls and curbs - 1 1/2"
d- Slab on grade - at center

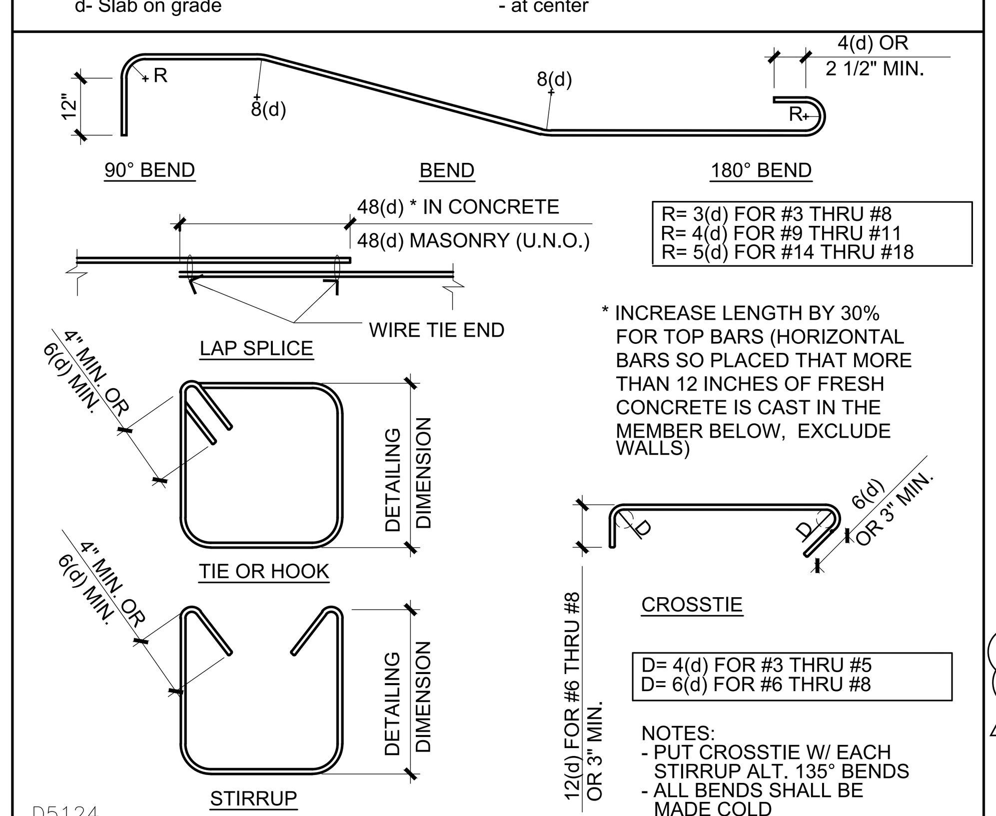

R TYP. REINFORCING DETAILS

FOUNDATION

1. All continuous footings to have 5/8"dia. x min. 12" anchor bolts, min. 7" embedment into concrete footing at 72" o.c. unless noted otherwise on plans. One anchor bolt should be located max. 12" away and min. 4 1/2" from the end of the sill plates. min. (2) A.Bs. per sill plate/shear panel. Sill plate under shear walls of up to 4'-0" in length must be continuous. See note 2 for sill plate fasteners at interior non-shear walls.

1a. Anchor bolts at shear walls shall be installed with plate washers of min. 3" sq. x 0.229" thick between sill plate and nut. Edge(s) of plate washers shall be 1/2" max. from inside face of shear panel(s) per conditions shown below.

1b. The hole in the plate washer is permitted to be diagonally slotted with a width of up to 3/16 inch larger than the bolt diameter and a slot length not to exeed 1 3/4 inches, provided a standard cut washer (5/8" Nominal size : 11/16" ID,1 3/4" OD , 9/64" thick) is placed between the plate washer and the nut.

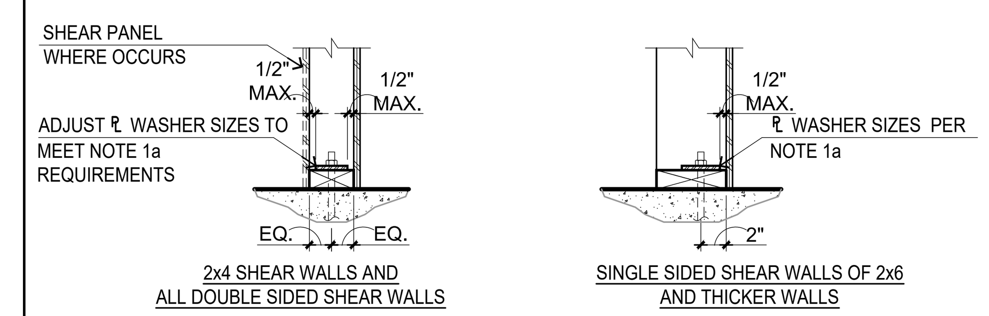

SW-AB
SW ANCHOR BOLTS AND PLATE WASHER ARRANGEMENT

2. For interior non-bearing and non-shear walls use Simpson PDPAWL-MG series 0.157Ø pins with a penetration of 1 1/4" into slab at 16" O.C. to be installed in accordance with ICC ESR-2138. Actual slab thickness to be minimum 4". All interior shear walls to have A.Bs. per foundation plan.
3. All holdowns and post anchors to be installed according to most current Simpson Strong Tie specifications and requirements of ICC-ER reports & shall be tied in place prior to foundation inspection. Dimensions are not furnished to Simpson holdowns. It is the responsibility of the contractor's superintendent, the framing contractor and the concrete contractor to locate these anchors in the exact location. Refer to details for proper installation.
4. Min. concrete width to be 8" for receiving PA, HPA & STHD's. Verify locations of holdowns and anchor bolts with rough framing to assure accurate installation.
5. Provide #3 X 24" dowel at 24" o.c. and 12" from the corner at all concrete stoops and porches.
6. Provide min. (1) #4 reinforcing for electrical ground, location to be verified with the electrical contractor.
7. Verify min. foundation depth, width, reinforcing steel and additional expansive soil requirements with valid soils report and if more stringent, they shall supersede the above minimum requirements. See note #7 under reinforced concrete for concrete strength.
8. Admixtures in concrete mix. containing calcium chlorides shall not be used.
9. Footings shall be observed and approved in writing by the project soil/geology engineer prior to inspection and placement of concrete.
10. Concrete shall be to the strength and slump as specified per structural design, and consist of Portland cement ASTM C-150 Type V per soils engineer's recommendations and Building Code section 1904.1 (ACI 318 section 19.3.2.1) when exposed to sulfate containing solutions. Aggregates shall be per ASTM C-33. Water to be clean and potable.
11. Placement shall be in one continuous operation unless otherwise specified. Slab surface shall be cured with 'Hunts' compound or equal or cured with other methods in accordance with good construction practice at contractor's option.
12. Contractor shall dampen slab underlayment of sand/membrane just prior to concrete placement to assist uniform concrete curing. Slabs must not be poured during or immediately after rainstorms. The specified sand over visqueen should not be saturated at the time of the concrete pour. Any free water trapped in the sand layer must be removed prior to the concrete pour.
13. The bottoms of footing excavations shall be level, clean and free of loose material or water when concrete is placed. Over excavation shall be filled with concrete or properly compacted fill that has been tested and approved by the soils engineer. Backfill shall not be placed until supporting foundations, walls and slab have attained sufficient strength to support lateral soil pressure.
14. Concrete placement shall be monolithic in one continuous operation uniformly placed and must be vibrated and well consolidated unless shown otherwise on plans. Dual pour is defined by ACI as to when 1st. & 2nd. pour can not be vibrated together.
15. Floor slab shall be poured level to 1/8" in 10'.
16. Requirements for pre-saturation of subgrade soils and daylight setback of exterior footings from any descending slope shall comply with soil report recommendations.
17. Finish grade around the perimeter of slab shall be constructed such that rain and irrigation water is drained away from the slab.
18. All site and pad preparation, such as but not limited to shading, compacting of the fill, pre-saturation, and concrete slab base preparation, shall be performed in accordance with the soil engineer's recommendation and soils report.
19. Foundation framing and other drawings prepared by Gouvis Engineering Consulting Group reflect the structural requirements. Refer to architectural, civil & other plans for dimensions, depressions, slopes, shelves, patios, stoops and porches not shown or different from these plans/documents drawings. Accuracy of the dimensions and final fit of the building shall be reviewed by the architect and the contractor prior to construction.
20. Waiting period for concrete slabs-on-grade prior to start of construction is as follows:
a. Do not walk on slab until 24 hours after concrete has been poured.
b. Begin wall framing 4-5 days after concrete poured.
c. Begin roof/floor framing 7-10 days after concrete poured.
d. Do not load roof prior to 14 days after concrete poured.
21. No pipes or conduits shall extend under isolated column footing or under continuous wall footings unless specifically detailed or approved by the architect, structural engineer and the building official.
22. The contractor shall arrange for observation of the work by the soils engineer. The following are requirements of the soils engineer:
a. All footing excavations shall be observed and approved in compliance with the soils report by the soil engineer prior to placing of concrete or steel.
b. Soil conditions, including compacting and moisture content, shall be observed and approved to be in compliance with the soil report by the soils engineer prior to placing of concrete or steel.
c. A letter shall be submitted to the building official prior to his foundation inspection and to the architect and structural engineer.
23. Prior to the contractor requesting a Building Department foundation inspection, the soil engineer shall advise the building official in writing that:
a. The building pad was prepared in accordance with the soil report.
b. The utility trenches have been properly backfilled and compacted
c. The foundation excavations, the soils expansive characteristics and bearing capacity conform to the soils report.

DEFERRED APPROVAL:

1. Elements of structure that are marked "by others" shall be excluded from this work permit.
2. General contractor shall first submit separate drawings for the above elements to the EOR for their review and if approved, then submit to the building officials for their review and approval.
3. City approval shall be obtained prior to installation of element subjected to deferred approval.
4. Manufacturer designed roof truss to be deferred approval item.

GOUVIS engineering consulting group, inc. ®

15 Studebaker
Irvine
CA 92618

Irvine
tel 949.752.1612
fax 949.752.5321

Palm Springs
tel 760.323.5090

REGISTERED PROFESSIONAL ENGINEER DISSAKORN EOSAKUL No. S 5226 Exp. 6/30/23 STRUCTURAL STATE OF CALIFORNIA

DATE SIGNED: 2/3/23

RESTRICTIVE NOTICE

THESE DESIGNS, DRAWINGS, AND SPECIFICATIONS ARE THE EXCLUSIVE PROPERTY OF GOUVIS ENGINEERING CONSULTING GROUP. THEY ARE THE SUBJECT OF COPYRIGHT AND OTHER LEGAL PROTECTION. THEY MAY BE USED ONLY BY THEIR INTENDED RECIPIENT AND ONLY FOR THE PROJECT DEPICTED HEREIN. NO PART OF THESE DRAWINGS ARE TO BE COPIED, TRANSFERRED, REPRODUCED, NOR CAN THEY BE USED, IN WHOLE OR IN PART, BY ANY OTHER PERSON OR FOR ANY OTHER PROJECT OR STRUCTURE, WITHOUT THE PRIOR EXPRESS WRITTEN CONSENT OF GOUVIS ENGINEERING CONSULTING GROUP

© 2017 GOUVIS ENGINEERING CONSULTING GROUP INC. - ALL RIGHTS RESERVED

PROJECT:
Tenant Square

DEVELOPER:
Osito Holdings LLC

ARCHITECT:

LOCATION:
Morgan Hill
Santa Clara
CA

REVISIONS

NO.	DATE	DESCRIPTION
1	02/02/23	BLDG DEPT.

SHEET NAME:
GENERAL NOTES & REQUIREMENTS

PROJECT NUMBER:
66074

ENGINEER: GE
DRAFTER: GE

SHEET NUMBER:
SN1B

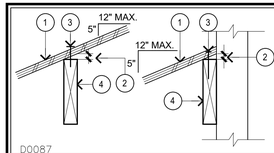

SHEAR TRANSFER 13

1. ROOF SHEATHING
2. 3/8" MAX. NAIL EXPOSURE @ GAP.
3. INCREASE NAILING TO RSRS NAILS @ 3" O.C. ON NON-BEVELED MEMBER.
4. 2X BLK'G., LEDGER, R/R, OR TRUSS TOP CHORD UNDER ROOF SHEATHING WHEN NOT BEVELED ON TOP AS REQ'D.

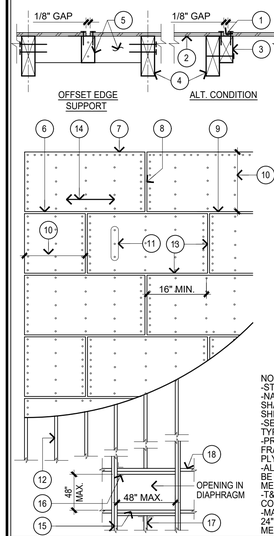

SHEATHING LAYOUT D0005–101122 16

NOTES:
-STAGGERED JOINTS AS SHOWN
-NAILS SHALL BE DRIVEN TIGHT BUT SHALL NOT FRACTURE SURFACE OF SHEATHING.
-SEE GENERAL NOTES FOR PLYWOOD TYPE, THICKNESS, SPACING, & NAIL SIZE.
-PROVIDE MIN. 3/8" EDGE DISTANCE @ FRAMING MEMBER & 5/16" TO EDGE OF PLYWOOD DIAPHRAGM.
-ALL DIAPHRAGM BOUNDARIES SHOULD BE FULLY SUPPORTED BY FRAMING MEMBERS W/ BOUNDARY NAILING.
-T&G EDGE TO BE LOCATED OVER CONTINUOUS PANEL JOINT.
-MAX. UNSUPPORTED SHEATHING TO BE 24". PROVIDE ADEQUATE FRAMING MEMBERS TO LIMIT SPAN.

1. PANEL JOINT.
2. ROOF OR FLOOR SHEATHING.
3. 2X4 W/ NAILS TO BE MATCHED W/ EDGE NAILING.
4. ROOF OR FLOOR FRAMING MEMBER.
5. 2X4 BLK'G 6'-0" LONG MAX.W/ (2) 16d COMMON NAILS @ EA. END.
6. PANEL EDGE WHERE 2X FLAT BLKG. IS NEEDED @ BLOCKED DIAPHRAGM.
7. DIAPHRAGM BOUNDARY & B.N. PER PLAN.
8. DISCONTINUOUS PANEL EDGE, EDGE NAILING PER PLAN.
9. CONT. PANEL EDGE W/ BLKG. (IF BLOCKED DIAPHRAGM), EDGE NAILING PER PLAN.
10. 24" MIN. UNLESS FULLY BLOCKED @ ALL EDGES.
11. FIELD NAILING PER PLAN.
12. FRAMING MEMBERS.
13. 1/8" GAP U.N.O.
14. DIRECTION OF FACE GRAIN PERPENDICULAR TO SUPPORT.
15. BLOCK OUT EDGES OF THE OPENING W/ DBL. STRUCT'L MEMBERS/BEAM (U.N.O.) AND PROVIDE B.N. @ ALL EDGES. PROVIDE SINGLE BLOCKING W/ E.N. WHEN OPENING < 24"x24", AND STRAPS PER NOTE 18 DO NOT APPLY.
16. TYP. APPROVED HANGERS USE (3) 16d TOE NAILS IF LENGTH OF TAIL JOIST < 6'-0".
17. TAIL JOIST/TRUSS PER PLAN.
18. TYP. 2-BAYS OF BLKG. USE CS16 OVER BLK'G AND NAIL @ 2 1/16" O.C. U.N.O. ON FRAMING PLAN.

CS16 DRAG STRAP NAILING PATTERN D0301–110425 17

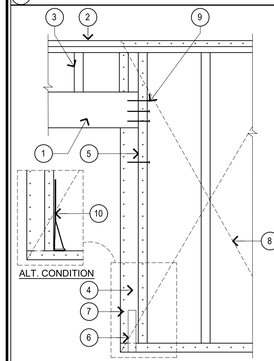

1. HEADER, SEE PLAN.
2. DBL. TOP PLATE.
3. CRIPPLE WALL WHERE OCCURS.
4. 4X TRIMMER U.N.O.
5. 2X KING STUD W/ 16d's @ 16" O.C. TO TRIMMER.
6. SIMPSON HOLDOWN.
7. E.N. OF SHEAR WALL ON TRIMMER & KING STUD.
8. SHEAR PANEL, SEE PLAN.
9. MIN. (3) 16d's TO END OF HEADER.
10. WHEN HDU HOLDOWNS CONNECTED TO THE KING STUD, REPLACED SDS SCREWS W/ LONGER LENGTH TO GET 2 1/2" PENETRATIONS TO 4X TRIMMER

FRAMING DETAIL D0077–190405 18

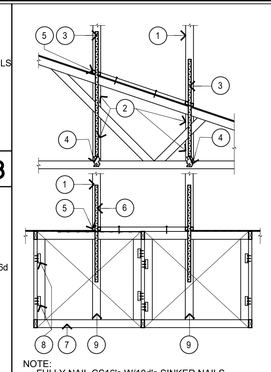

1. CHIMNEY STACK ON ROOF.
2. PROVIDE SOLID VERTICAL BLOCKS UNDER CORNERS OF CHIMNEY BETWEEN TRUSS CHORDS TO RECEIVE STRAPS @ CONDITION W/ ROOF TRUSSES DIRECTLY UNDER STACK.
3. SIMPSON CS16 STRAP W/ 16" MIN. LAP ON CORNER STUDS & CONTINUOUS JUST ABOVE A35 CLIP @ BOTTOM TRUSS.
4. SIMPSON LTP4 EA. SIDE TO BOTTOM CHORD OF TRUSS.
5. SLOT CUT ROOF SHEATHING AT STRAPS.
6. CS16 EA. CORNER W/ MIN. 16" LAP ON CORNER STUD AND FILLER BLOCK BELOW @ CONDITION WHERE TRUSSES ARE OFFSET FROM STACK CORNERS.
7. ADD SHEAR PANEL BLK'S W/ 1/2" SHT'G & 10d's @ 4" O.C. ALL AROUND.
8. (2) A35's EA. SIDE OF PANEL BLK'S TO TRUSS. (PROVIDE BLK'G @ WEB IF NECESSARY).
9. ADD VERT. 2x FILLER BLOCK W/ E.N. TO RECEIVE STRAPS.

INTERIOR CHIMNEY TIE DOWN D0300 9

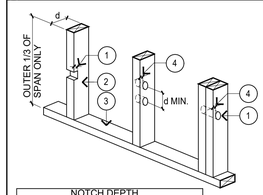

NOTCH DEPTH		
STUD SIZE	EXT. & BRN'G. WALLS	NON-BRN'G. WALLS
2x4	7/8"	1 7/16"
2x6	1 3/8"	2 3/16"

1. NOTCH DEPTH & BORED HOLE SEE TABLE BELOW.
2. STUD
3. SILL PLATE
4. HOLE EDGE DISTANCE 5/8" MIN.

NOTE:
BORED HOLES NOT PERMITTED IN MORE THAN TWO CONSECUTIVE DOUBLE STUDS

BORED HOLES		
STUD SIZE	EXT. & BRN'G. WALLS	NON-BRN'G. WALLS
2x4	1 3/8"	2 1/8"
2x6	2 3/16"	3 5/16"
2-2x4	2 1/8"	2 1/8"
2-2x6	3 5/16"	3 5/16"

D0007N1

STUD NOTCHING/BORING LIMITS 10

1. NOTCH IN PLATE.
2. 1 3/4" MAX. IF BORED HOLE EXCEED 1 3/4" IN 2x4 TOP TOP PLATE, STRAP EA. SIDE OF PLATE W/ ITEM #3 BELOW. PLATE OR 2 3/4" IN 2x6
3. SIMPSON RPS METAL STRAP, TYPICAL @ EACH PLATE CUT W/ (6) 16d's @ EACH SIDE. U.N.O. ON PLANS PER DETAIL 9/SD-2.
4. PIPE WHERE OCCURS.
5. TOP PLATES/SILL PLATES
6. ANCHOR BOLTS PER PLANS
7. LOCATE ANCHOR BOLT 5" MIN. 9" MAX. AWAY FROM NOTCH OR END OF PLATE

NOTES:
- IF NOTCH OR HOLE EXCEEDS 50% OF TOP PLATE WIDTH, STRAP BOTH SIDES OF PLATES.
- FOR PIPING THRU TOP & SILL PLATES OF SHEAR WALLS, CONTACT GOUVIS ENGINEERING.

PIPING THRU PLATE FRAM'G-NON SW 11 D0006–110125

T.JI SIZE	HOLE SIZE									
	UP TO 3"		4"		6 1/2"		8 7/8"		11"	
	@	b	@	b	@	b	@	b	@	b
	MIN. DIST. FROM EDGE OF HOLE TO EDGE OF SUPPORT									
11 7/8" 210	1'-0"	1'-0"	1'-0"	2'-0"	2'-6"	5'-0"	5'-6"	6'-6"	N.A.	N.A.
11 7/8" 230	1'-0"	1'-0"	1'-0"	2'-0"	3'-0"	5'-6"	6'-0"	7'-0"	N.A.	N.A.
14" 230	1'-0"	1'-0"	1'-0"	1'-0"	1'-6"	4'-0"	3'-6"	7'-0"	6'-6"	9'-0"
14" 360	1'-0"	1'-0"	1'-0"	1'-0"	2'-6"	5'-6"	5'-6"	8'-0"	8'-0"	9'-6"

NOTES:
- FOR OTHER HOLE SIZES & JOIST TYPE, SEE MANUFACTURER SPEC.
-DO NOT CUT HOLES LARGER THAN 1 1/2" IN CANTILEVER PORTION OF THE JOIST.
- A 1 1/2" HOLE CAN BE CUT ANYWHERE IN THE WEB. EXCEPT WITHIN 6" AWAY FROM SUPPORT.
- REFER TO MANUFACTURERS GUIDE-LINES IN I-JOIST CATALOG FOR MORE INFO.
- NO FIELD CUT WITHIN 6" AWAY FROM FACE OF SUPPORT.

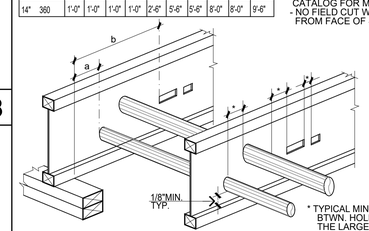

* TYPICAL MIN. DISTANCE BTWN. HOLES TO BE 2X THE LARGER HOLE.

NOTCH & HOLES IN I-JOIST

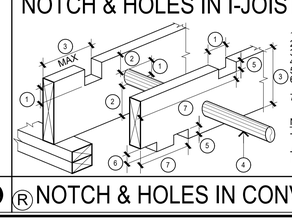

1. 1/3 OF JOIST DEPTH MAX.
2. 2" CLEAR TO EDGE OF JOIST.
3. JOIST DEPTH.
4. PIPE OR CONDUIT.
5. 1/6 OF JOIST DEPTH MAX.
6. 1/4 OF JOIST DEPTH MAX. AT SUPPORT END.
7. 1/3 OF JOIST SPAN MAX.

NOTES:
-FOR SOLID SAWN JOISTS, NOTCHED TO BE @ OUTER 1/3 SPAN ONLY.
-MAINTAIN MIN. 6" SPACING BETWEEN NOTCHES/BORED HOLES.

NOTCH & HOLES IN CONV. JST. D0001–190618 12

TYP. FRAMING CROSS SECTION 6

1. 2X STUDS
2. SILL PLATE
3. S.P.N. PER PLAN
4. 2X JOISTS OR "I"-JOIST
5. 2X4 @ 24" O.C. W/ (1) LTP4 TO EACH FLOOR MEMBER
6. MIN. 2X6 SOLID BLK'G. W/ (2) 16d NAILS EA. SIDE UNDER PERPENDICULAR BRG. WALLS. SEE PLANS FOR PARALLEL BRG. WALLS. AT NON-BRG. PERPENDICULAR WALLS, USE 2X4* FLAT BLOCKING TO RECEIVE SILL PLATE NAILING. USE TOTAL OF (3) 16d's TOENAILS EACH END.

*(2X4 FLAT BLOCKING CAN BE IGNORED IF S.P.N. CAN BE INSTALLED TO TOP OF FLOOR JOISTS.)

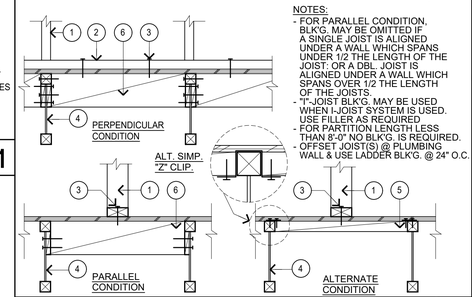

NOTES:
- FOR PARALLEL CONDITION, BLK'G. MAY BE OMITTED IF A SINGLE JOIST IS ALIGNED UNDER A WALL WHICH SPANS UNDER 1/2 THE LENGTH OF THE JOIST. OR A DBL. JOIST IS ALIGNED UNDER A WALL WHICH SPANS OVER 1/2 THE LENGTH OF THE JOISTS.
- "I"-JOIST BLK'G. MAY BE USED WHEN I-JOIST SYSTEM IS USED. USE PLANS AS REQUIRED.
- FOR PARTITION LENGTH LESS THAN 8'-0" NO BLK'G. IS REQUIRED.
- OFFSET JOIST(S) @ PLUMBING WALL & USE LADDER BLK'G. @ 24" O.C.

BEARING & NON-BEARING WALL D0008–120911 7

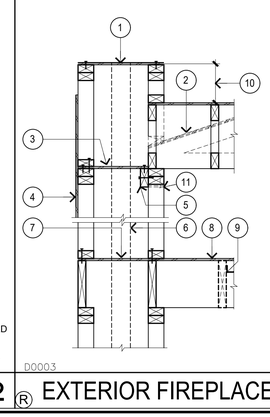

1. 1/2" THICK PLYWOOD SHT'G.
2. ROOF SYSTEM.
3. MIN. 1/2" THICK PLYWOOD SH'T'G. NAILED DOWN @ 6" O.C. TO LEDGER/TOP PLATE. AS AN ALT. EXTEND ROOF SH'T'G. THROUGH FIREPLACE.
4. 1/2" THICK PLYWOOD ON 3 SIDES CENTERED @ JOINT & EXTEND 4'-0" EACH WAY.
5. 2X LEDGER W/ 16d's @ 6" O.C. & LTP4 @ 8" O.C. TO DBL. TOP PLATE.
6. FIREPLACE FLUE.
7. CUT HOLE IN PLYWOOD ONLY AS REQUIRED.
8. PLYWOOD FLOOR SHT'G. CONT. THRU FIREPLACE.
9. FLOOR SYSTEM.
10. MAX. UNSUPPORTED HEIGHT TO BE 4'-0". VERIFIED W/ ARCH. DWG. BY CONTRACTOR. FOR HEIGHTS GREATER THAN 4'-0" USE ADEQUATE KICKERS TO BRACE WALL TO ROOF.
11. PLYWOOD SHIM AS REQ'D. W/ 16d SINKER. FACE NAILS @ 4" O.C. TO DBL. TOP PLATES FOR LTP4

D0003

EXTERIOR FIREPLACE CONN. 8

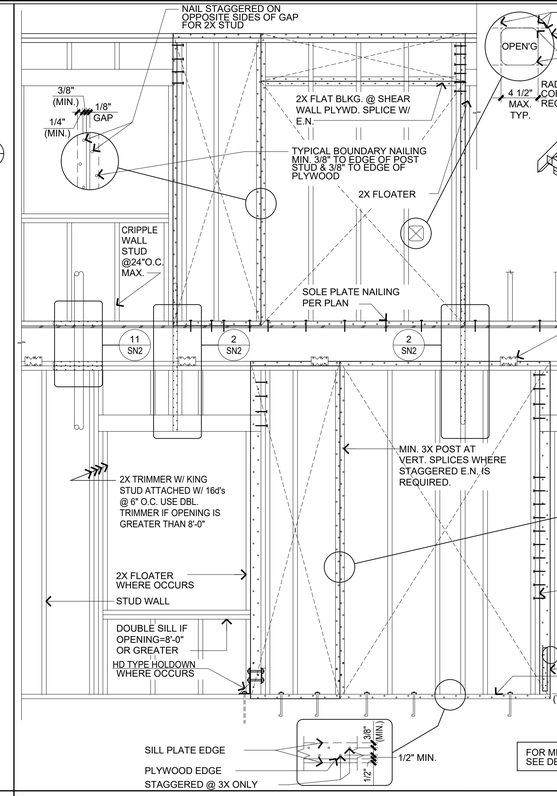

TYPICAL FRAMING ELEVATION D0014–171130 1

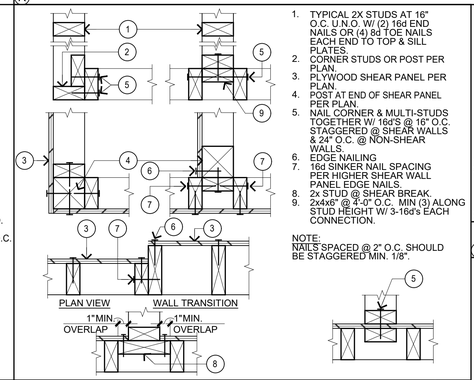

1. TYPICAL 2X STUDS AT 16" O.C. U.N.O. W/ (2) 16d END NAILS OR (4) 8d TOE NAILS EACH END TO TOP & SILL PLATES.
2. CORNER STUDS OR POST PER PLAN.
3. PLYWOOD SHEAR PANEL PER PLAN.
4. POST AT END OF SHEAR PANEL PER PLAN
5. NAIL CORNER & MULTI-STUDS TOGETHER W/ 16d'S @ 16" O.C. STAGGERED @ SHEAR WALLS & 24" O.C. @ NON-SHEAR WALLS.
6. EDGE NAILING
7. 16d SINKER NAIL SPACING PER HIGHER SHEAR WALL PANEL EDGE NAILS.
8. 2x STUD @ SHEAR BREAK.
9. 2x4x6" @ 4'-0" O.C. MIN (3) ALONG STUD HEIGHT W/ 3-16d's EACH CONNECTION.

NOTE:
NAILS SPACED @ 2" O.C. SHOULD BE STAGGERED MIN. 1/8".

SHEAR WALL/WALL INTERSECTION D0018–110425 4

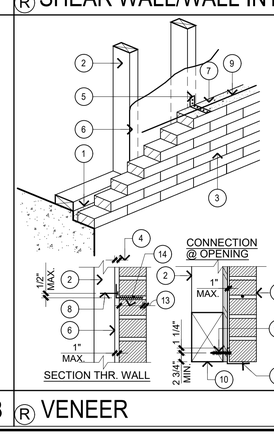

1. FLASHING.
2. WOOD FRAMED WALL.
3. 4" MAX. BRICK VENEER. SEE ARCH. DWG & MANUFACTURER FOR MORE INFORMATION.
4. PER ARCHITECT.
5. 22 GAUGE X7/8" WIDE GALVANIZED CORRUGATED STEEL VENEER ANCHOR @ 16"O.C. VERT. & MAX. 24" O.C. HORIZONTAL. STEEL ANCHOR SHALL HAVE A LIP OR HOOK ON THE EXTENDED LEG THAT WILL ENGAGE THE CONT. 9 GAGE HORIZ. WIRE. AS AN ALTERNATE, USE ANCHORS @ 16" VERT. & 16" HORIZ.
6. SHEATHING WHERE OCCURS.
7. MORTAR BED.
8. 10d GALVANIZED RING-SHANK NAIL AT BEND IN ANCHOR
9. IN SEISMIC DESIGN CATEGORIES C,D,E, & F, ADD #9 B.W. GAGE WIRE JOINT REINF. @ 12" O.C. HORIZ.
10. BEAM OR HEADER PER PLAN.
11. 1/2"Ø X 4" LONG LAG SCREWS @ 12" O.C. STAGGERED.
12. ANGLE SIZE SPAN (MAX.)
L4x3 1/2x5/16" 8'-0"
L6x3 1/2x1/2" 13'-0"
L7x4x5/8" 16'-0"
(NOTE: STL. ANGLE ARE LLV)
13. MIN. 5/8" MORTAR COVE L.
14. MIN. HALF VENEER THICKNESS (1 1/2" MIN.).

NOTE:
- ANGLE NEEDS TO EXTEND & BEAR MIN. 4" ON SIDE OF VENEER.
- MAX. VENEER HEIGHT SUPPORTED BY STEEL ANGLE IS 3'-6".

VENEER D0004–140424 5

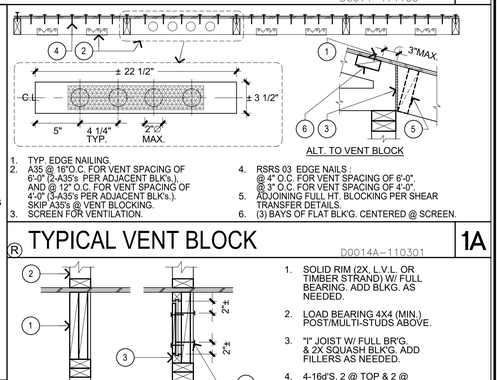

1. TYP. EDGE NAILING.
2. A35 @ 16"O.C. FOR VENT SPACING OF 6'-0" (2-A35's PER ADJACENT BLK's.) AND @ 12" O.C. FOR VENT SPACING OF 4'-0" (3-A35's PER ADJACENT BLK's). SKIP A35's @ VENT BLOCKING.
3. SCREEN FOR VENTILATION.
4. RSRS 03 EDGE NAILS : @@ 4" O.C. FOR VENT SPACING OF 6'-0". @ 3" O.C. FOR VENT SPACING OF 4'-0".
5. ADJOINING FULL HT. BLOCKING PER SHEAR TRANSFER DETAILS.
6. (3) BAYS OF FLAT BLK'G. CENTERED @ SCREEN.

TYPICAL VENT BLOCK D0014A–110301 1A

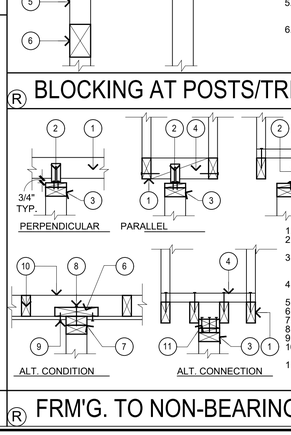

1. SOLID RIM (2X, L.V.L. OR TIMBER STRAND) W/ FULL BEARING. ADD BLKG. AS NEEDED.
2. LOAD BEARING 4X4 (MIN.) POST/MULTI-STUDS ABOVE.
3. "I" JOIST W/ FULL BR'G. & 2X SQUASH BLK'G. ADD FILLERS AS NEEDED.
4. 4-16d'S, 2 @ TOP & 2 @ BOTTOM EACH SIDE.
5. SOLID BLKG./POST. MULTI-STUD OR BEAM BELOW.
6. HEADER PER PLAN

BLOCKING AT POSTS/TRIMMERS D0008–110425 2

1. BOTTOM CHORD OF TRUSS.
2. SIMP. STC @ EACH CONNECT. (MAX. @ 24" O.C.)
3. IX OVER 2X PLATE OR (2) 2X TOP PLATE WHEN TRUSS BOT. CHORD IS CAMBERED
4. 2X BLK'G. @ 24" O.C. W/ (2) 16d's TO EACH MEMBER.
5. 2X MEMBER W/(2) 16d TO BLK'G.
6. 2X8 BRACING.
7. (2) 2X TOP PLATE.
8. (2) 16d'S @ 12" O.C.
9. TYP. EDGE NAILING.
10. 2X CEILING JOIST OR BOTTOM CHORD OF CAMBERED TRUSS.
11. 2X BLK'G. X 12" LONG @ ±6'-0" O.C. NAILED TO TOP PLATE W/ (3) 16d's.

FRM'G. TO NON-BEARING WALLS D0019–141006 3

GOUVIS engineering
consulting group, inc.
15 Studebaker
Irvine
CA 92618

Irvine
tel 949.752.1612
fax 949.752.5321

Palm Springs
tel 760.323.5090

REGISTERED PROFESSIONAL ENGINEER
DEBAKORN COSAKUL
No. S 5226
Exp. 6/30/23
STRUCTURAL
STATE OF CALIFORNIA

DATE SIGNED: 2/3/23

RESTRICTIVE NOTICE

THESE DESIGNS, DRAWINGS, AND SPECIFICATIONS ARE THE EXCLUSIVE PROPERTY OF GOUVIS ENGINEERING CONSULTING GROUP. THEY ARE THE SUBJECT OF COPYRIGHT AND OTHER LEGAL PROTECTION. THEY MAY BE USED ONLY BY THEIR INTENDED RECIPIENT AND ONLY FOR THE PROJECT DEPICTED HEREIN. NO PART OF THESE DRAWINGS ARE TO BE COPIED, TRANSFERRED, REPRODUCED, NOR CAN THEY BE USED, IN WHOLE OR IN PART, BY ANY OTHER PERSON OR FOR ANY OTHER PROJECT OR STRUCTURE, WITHOUT THE PRIOR EXPRESS WRITTEN CONSENT OF GOUVIS ENGINEERING CONSULTING GROUP

© 2017 GOUVIS ENGINEERING CONSULTING GROUP INC. - ALL RIGHTS RESERVED

PROJECT:
Tenant Square

DEVELOPER:
Osito Holdings LLC

ARCHITECT:

LOCATION:
Morgan Hill
Santa Clara
CA

REVISIONS

NO.	DATE	DESCRIPTION
1	02/02/23	BLDG DEPT.

SHEET NAME:
STRUCTURAL DETAILS & NOTES

PROJECT NUMBER:
66074

ENGINEER: GE
DRAFTER: GE

SHEET NUMBER:
SN2

ISSUED DATE: 5/6/2022

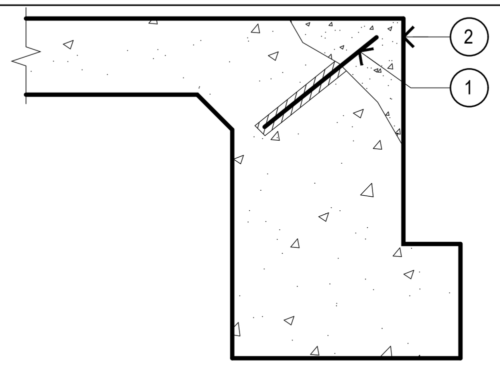

1. #4 DOWELS EMBEDED 4 1/2" INTO EXISTING CONCRETE @ 6" O.C. (MIN. 2).
2. REPLACE CONCRETE SPALLING WITH HIGH STRENGTH CONCRETE MIX, OR EPOXY (f'c=2500 PSI MIN.).

Ⓡ CONCRETE SPALLING — 17
FF17-110401

MISSING HOLDOWN	REPLACE WITH	EXT./INT. FTG. ASTM-A36 ROD Ø	EXT./INT. FTG. A36 PLATE WASHER	EXT./INT. FTG. le	ALT. INT. FTG. W/ SIMPSON EPOXY ASTMA307-C ROD Ø	ALT. INT. FTG. W/ SIMPSON EPOXY hef	ALT. INT. FTG. W/ SIMPSON EPOXY C (MIN.)
HDU2, PA28	HDU2	5/8"	2"x2"x1/4"	12"	1/2"	10"	8"
HTT4	HTT4		2 1/2"x2 1/2"x1/4"		3/4" TO FTG. 5/8" TO HOLDDOWN SEE DET. B	15"	12"
HPA28, HTT5, HPA35 STHD10, STHD14	HTT5						
HDU4	HDU4						
HDU8	HDU8	7/8"	3"x3"x3/8"	13"			
HDQ8	HDQ8		3 1/4"x3 1/4"x3/8"				
HDU11	HDU11	1"	3 1/2"x3 1/2"x3/8"	16"			
HDU14	HDU14		4"x4"x3/8"	19"			

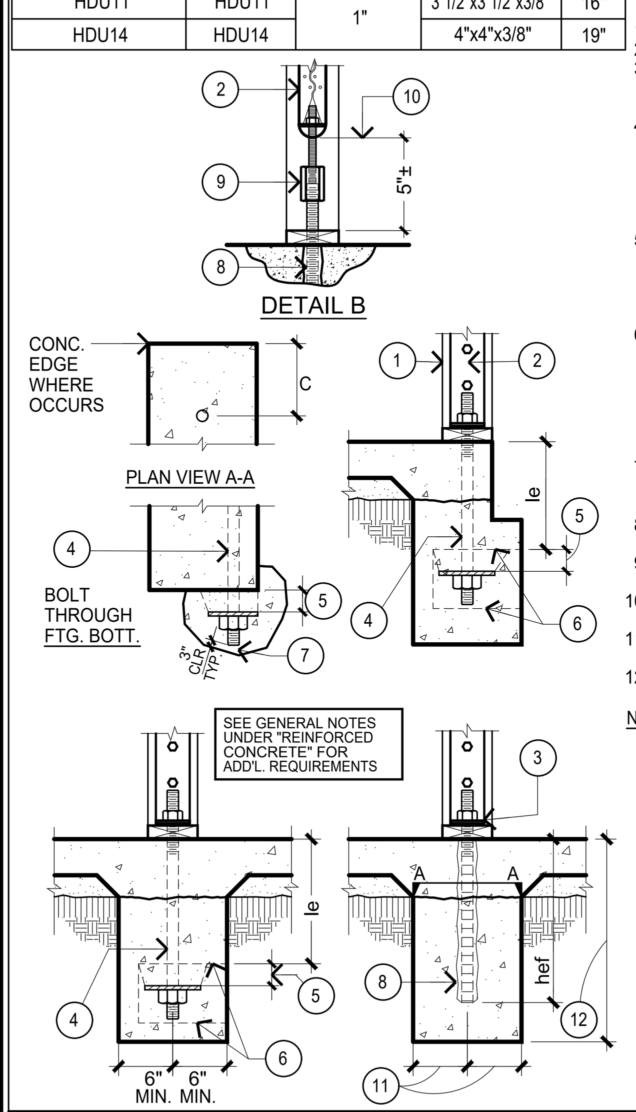

1. MULTI-STUD OR POST PER PLAN
2. NEW HOLDOWN, PER TABLE.
3. ADD 1 1/2"SQ. X 3/16" CUT PLATE WASHER BETWEEN NUT & HOLDOWN FOR 1/2"Ø ADHESIVE ANCHORS ONLY.
4. THREADED ROD (THRU BOLT) W/ HEAVY HEX NUT TACK WELDED TO PLATE WASHER. SEE SCHEDULE FOR PLATE SIZE. ALT. TO TACK WELDING APPLY DOUBLE HEX NUTS TO SECURE PLATE WASHER.
5. 2 1/2" THK. MIN. DRY PACKED NON-SHRINK GROUT ALL AROUND. SURFACE IN CONTACT WITH GROUT SHALL BE CLEANED, FREE OF GREASE AND LAITANCE.
6. NOTCH CONC. ALONG FTG. LENGTH TO 6" MAX. EA. SIDE OF HOLDOWN/ ROD. DO NOT CUT FTG. HORIZ. REINF. SOLID GROUT, WITHOUT ANY VOID, WITH HIGH STRENGTH NON-SHRINK GROUT W/ f'c=5000 psi MIN. CONT. SPECIAL INSPECTION IS REQUIRED.
7. PROVIDE MIN. 3" CONC./NON-SHRINK GROUT COVER ALL AROUND FOR ALL METAL PARTS.
8. THREADED ROD IN SIMPSON EPOXY TO FOOTING PER TABLE.
9. SIMPSON ATS-C65 COUPLER OR APPROVED EQUAL.
10. RAISE HOLDOWN BOTTOM FROM SILL PLATE.
11. 6" MIN. FOR 1/2"Ø ROD. 7" MIN. FOR 3/4"Ø ROD.
12. 18 3/4" MIN. FOR 3/4"Ø ROD.

NOTES:

- USE SIMPSON SET-XP EPOXY ADHESIVE ANCHORS, ICC-ESR-#2508 (JULY,2019) REFER TO ICC & MANUFACTURER'S SPECS FOR INSTALLATION PROCEDURES.
- CONTINUOUS SPECIAL INSPECTION & JOB-SITE QUALITY ASSURANCE ARE REQUIRED PER SECTION 4.4 & 4.5 OF ICC-ESR#2508.
- CONCTRACTOR SHALL SPECIFY OVERALL LENGTH OF ANCHOR.
- FOR CUTTING THE SLAB & TIE SLAB BACK SEE DETAIL 7
- FOR OTHER HOLDOWNS NOT LISTED IN TABLE &/OR OTHER COND. NOT INCLUDED HERE, CONTACT GOUVIS ENGINEERING FOR SPECIFIC FIX.
- MINIMUM AGE OF CONCRETE FOR EPOXY FIX IS 21 DAYS.

Ⓡ FIX FOR MISSING HOLDOWN — 18
D5105-210111

	REPLACEMENT ANCHORS FOR EACH MISSING ANCHOR BOLT	
WALL TYPE	SIMPSON TITEN HD SCREW ANCHORS 1-POUR OR 2-POUR W/ DOWEL (ICC ESR#2713)	SIMPSON SET-XP-EPOXY ADHESIVE WITH A307 GRADE C ANCHORS 1-POUR OR 2-POUR W/ DOWEL (ICC ESR#2508)
EXT. 2X4 SILL/3X4 SILL	(1) 5/8"Ø x 8"	(1) 5/8"Ø THREAD ROD, min. 7" EMBEDMENT INTO CONCRETE
EXT. 2X6 SILL/3X6 SILL	(1) 5/8"Ø x 8"	(1) 5/8"Ø THREAD ROD, min. 7" EMBEDMENT INTO CONCRETE
INT. 2X & 3X SILL	(1) 5/8"Ø x 8"	(1) 5/8"Ø THREAD ROD, min. 7" EMBEDMENT INTO CONCRETE

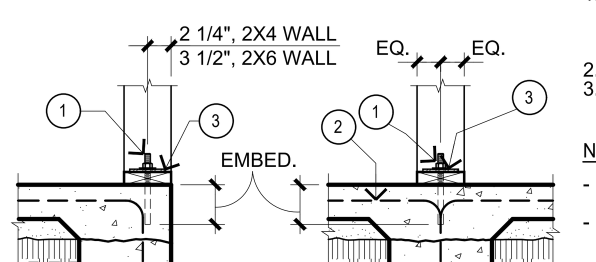

1. POST-INSTALLED ANCHOR PER TABLE. SPACING BETWEEN ANCHORS AND MIN. DISTANCE FROM EXIST. A.B. TO BE 4".
2. DOWEL PER NOTE S OF 1/SD1.
3. PLATE WASHER PER FOUNDATION NOTES ON SN1 SHEETS.

NOTES:

- LOCATE ANCHORS @ 10" MIN. FROM CONC EDGE PERPENDICULAR TO WALL.
- FOR NON-SHEAR WALL, INSTALL (1) 1/2"Øx4" EMBEDMENT TITEN HD ANCHOR FOR EACH MISSING OR MISPLACED A.B.
- PERIODIC SPECIAL INSPECTION IS REQUIRED FOR ANCHOR INSTALLATION.
- IF MIN. SPACING AND EDGE DISTANCE CAN NOT BE MET, CONTACT GOUVIS ENGINEERING FOR SPECIFIC FIX.
- MINIMUM AGE OF CONCRETE FOR EPOXY FIX IS 14 DAYS.

Ⓡ MISSING OR MISPLACED A.B. — 19
D5103-210111

1. EXIST. 2x MUDSILL USED IN LIEU OF 3X.
2. EXISTING FOUNDATION.
3. EXISTING A.B.'s PER PLAN.
4. SHEAR PANEL PER PLAN.
5. NEW 3x SILL BLOCKINGS "TIGHT FIT" @ EACH BAY FOR THE LENGTH OF SHEAR WALL.
6. (4) 10d NAILS @ 3" O.C. MAX. STAGGERED ON NEW 3x MUDSILL BLOCKINGS.
7. (E) SHEAR WALL EDGE NAILS PER SHEAR WALL SCHEDULE.
8. ADD 1/2"Ø SIMPSON TITEN HD SCREW ANCHORS FOR EVERY (2) ANCHOR BOLTS. PERIODIC SPECIAL INSPECTION IS REQUIRED PER ICC ESR 2713.
9. (4) 1/4"Ø x 3 1/2" SDS SCREWS STAGGERED ON NEW 3x SILL BLOCKING TO EXIST. 2x SILL PLATE.

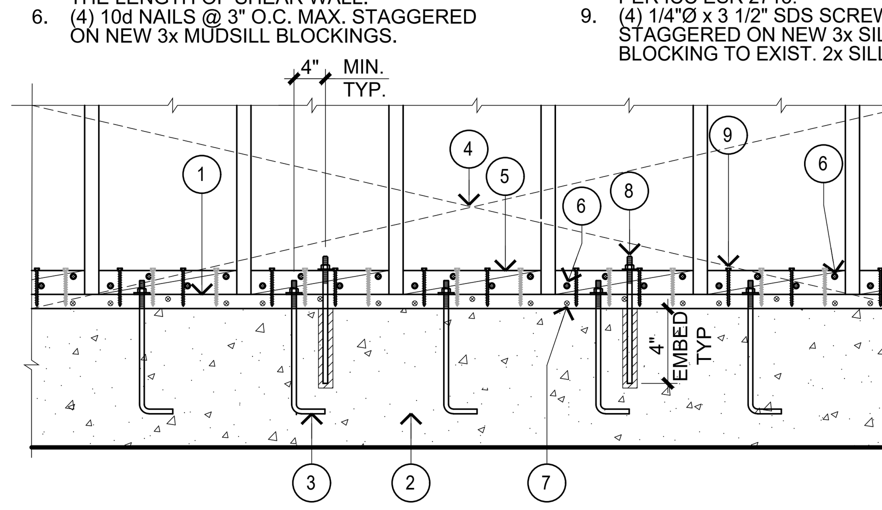

Ⓡ FIX FOR MISSING 3x SILL PLATE — 20
FF3-110401

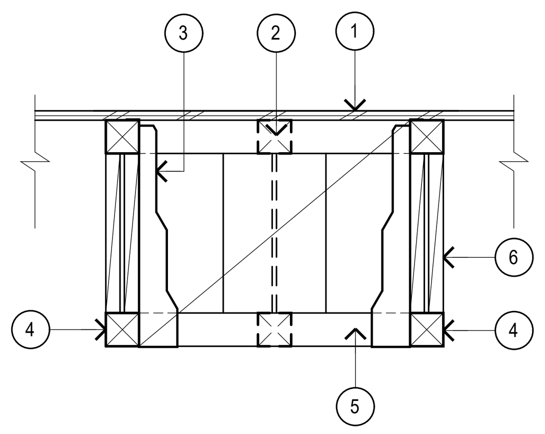

1. TYPICAL FLOOR SHEATHING.
2. SINGLE I--JOIST HEAD OUT "BEYOND".
3. SIMPSON "IUS" HANGER.
4. ADJACENT I-JOIST PER PLAN.
5. I-JOIST/230 or BCI 6500 BLOCK ALT. SOLID LSL BLOCK @ HEAD OUT. WEB FILLER REQ'D. @ I-JOIST OPTION.
6. WEB FILLER @ EA. SIDE OF I-JOIST @ EA. HANGER LOCATION, PER MANUFACTURER'S SPECIFICATIONS.

NOTE:
FOR SINGLE I-JOIST HEAD OUT @ OUTER 1/3 SPANS ONLY.

Ⓡ HEAD OUT DETAIL — 12
FF-13

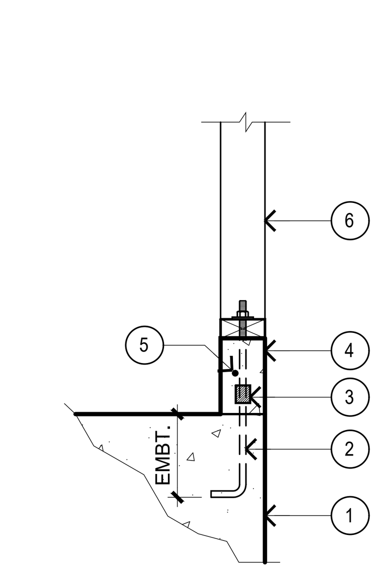

1. EXISTING SLAB & FOOTING.
2. EXISTING 5/8"Ø X12" A.B. SPACED PER PLAN.
3. EXTEND EXISTING A.B. W/ COUPLER NUT & 5/8"Φ RODS TO ADD CONCRETE CURB.
4. MIN. 3 1/2" WIDE X MAX. 12" TALL CURB TO BE ADDED. (f'c=2500 psi) MIN.
5. USE (1) CONT. #3 BAR.
6. 2X STUD WALL PER PLAN.

NOTE:
IF NO EXISTING A.B., USE 5/8"Φ THREADED RODS, EMBEDDED MIN. 7" INTO EXISTING CONCRETE W/ SIMPSON SET-XP EPOXY SPACED PER PLAN. MAX. @ 48" O.C. OR MINIMUM (2).

STEM WALL ADDITION ON Ⓡ EXISTING SLAB — 13
FF14-180619

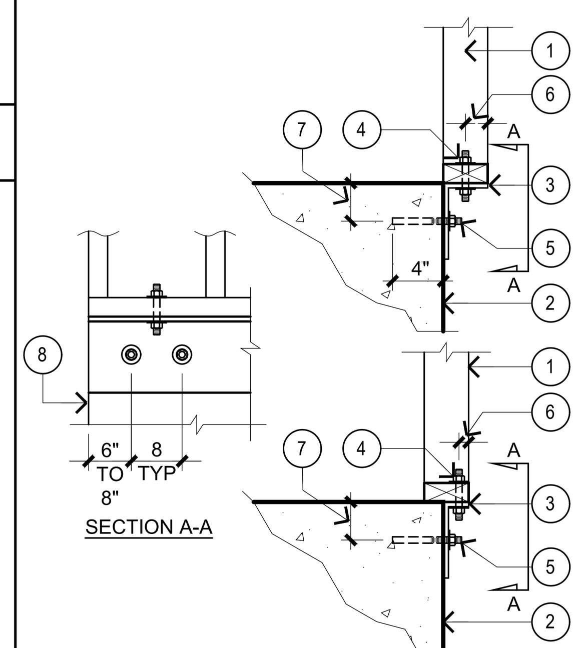

1. EXISTING NON-SHEAR WALL OVERHANGING COMPLETELY OR PARTIALLY OFF FOUNDATION EDGE , MIN 1 1/2" & MAX. 3 1/2".
2. EXISTING FOUNDATION WALL.
3. 3/8" THICK ANGLE IRON TO SUPPORT EDGE OF WALL. HORIZONTAL LEG TO MATCH OVERHANGING WALL (HORIZ. LEG MIN. 2"); VERTICAL LEG MIN. 6".
4. 1/2" Φ WELDED STUD BOLTS @ 16" O.C.
5. 1/2"Φ SIMPSON TITEN HD CONC. SCREW ANCHORS @ 8" O.C. W/ MIN. 6" FROM CONCRETE FOUNDATION EDGE. (ICC-ESR-#2713)
6. 1" MIN.
7. 2".
8. CONC FOUNDATION EDGE.

NOTES:

- ALL METALS EXPOSED TO WEATHER MUST BE PROTECTED AGAINST CORROSION.
- ANGLE TO BE CONTINUOUS.
- CONTACT GOUVIS ENGINEERING FOR ALTERNATIVE FIX FOR THE FOLLOWING CONDITION: OVERHANG < 1 1/2" OR > 3 1/2".

FIX FOR WALL OVERHANGING OFF FOUNDATION EDGE FOR Ⓡ 1 & 2 STORY COND. ONLY — 14
FF15-101101

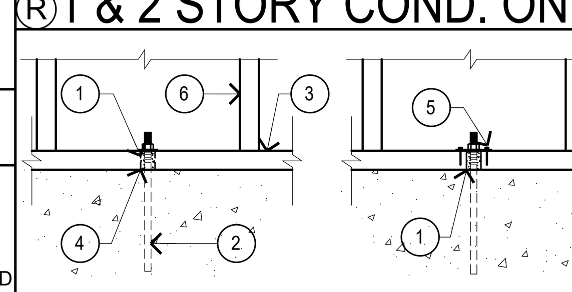

1. OVERSIZED HOLE OR HOLE GREATER THAN 1/16" OVER BOLT DIAMETER
2. ANCHOR BOLT W/ WASHER.
3. SILL PLATE
4. EPOXY GROUT
5. SIMPSON BPS 5/8
6. STUD WALL PER PLAN

Ⓡ FIX FOR OVERSIZED HOLE — 15
D5088

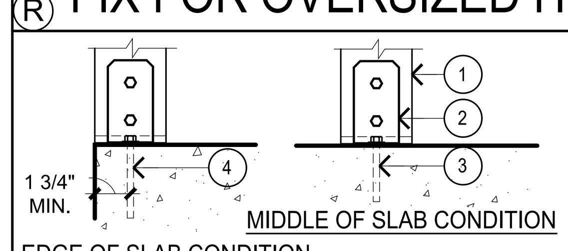

NOTES:
- FOLLOW MFR. SPECIFICATIONS FOR INSTALLATION OF ABU AND ANCHORAGE SYSTEM
- PAD FOOTING BELOW SHOULD BE NO MORE THAN ± 8" OFFSET FROM POST LOCATION

1. POST PER PLAN.
2. SIMPSON ABU COLUMN BASE TO MATCH POST SIZE.
3. 5/8" DIA. SIMPSON WEDGE ALL ANCHOR WITH 4 1/2" MIN. EMBEDMENT INTO CONC @ MIDDLE OF SLAB CONDITION.
4. 5/8" DIA. THREADED ROD EMBEDDED 5" INTO CONC. W/SIMP. SET EPOXY.
5. SPECIAL INSPECTION IS REQUIRED FOR BOTH CONDITIONS.

Ⓡ MISSING/MISPLACED COL. BASE — 16
D5089-101027

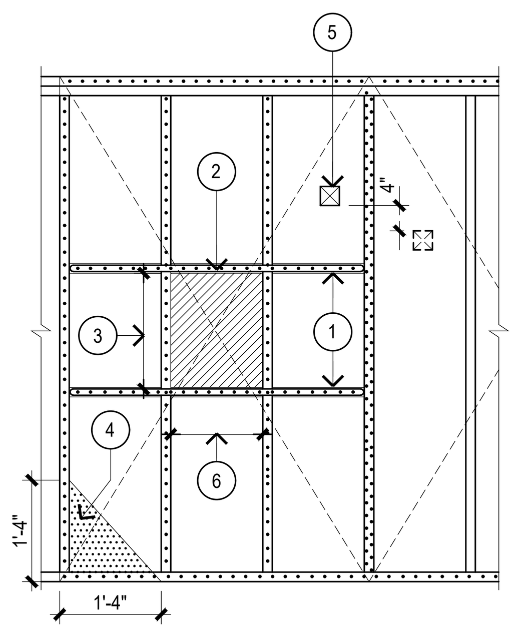

D0026-101123

1. 2X BLOCKING
2. SIMP. CS16X48" LONG W/ NAILS @ 2 1/16" O.C.
3. OPENING HEIGHT IS NO GREATER THAN 15% SHEAR WALL HEIGHT
4. NO CUT OR HOLES IN SHT'G WITHIN 16" OF CORNERS.
5. OPENINGS OF MAX. 4 1/2"x4 1/2" DO NOT NEED BLK'G/STRAP. DO NOT CUT MORE THAN ONE OPENING IN ONE HORIZONTAL LINE (AT ONE ELEVATION) AND OFFSET OPENINGS BY MIN. 4" VERT. SEE DETAIL 1/SN2 FOR OPENINGS SMALLER THAN 4 1/2" x 4 1/2"
6. OPENING WIDTH IS NO GREATER THAN 15% SHEAR WALL LENGTH

NOTE:

- AVOID OPENING IN SHEAR WALLS W/ LENGTH LESS THAN 4'-0".
- MAX. WIDTH OF OPENING TO BE ONE STUD BAY OR 14 1/2".
- DO NOT OVER-CUT ANY FRAMING MEMBER.
- E.N. TO BLK'G. TO MATCH SHEAR WALL E.N. UNLESS STRAP IS PLACED ON TOP OF PLYWOOD.
- EDGE NAIL F.HT. ALONG STUD ON EACH SIDE OF OPENING.
- DISTANCE FROM SHEAR WALL EDGE TO THE NEAREST OPENING EDGE IS A MINIMUM OF THREE TIMES THE LARGER OPENING DIMENSION
- THE MAXIMUM ACCUMULATED LENGTH OF OPENING SHALL NOT EXCEED 20% SHEAR WALL LENGTH

Ⓡ FIELD FIX FOR OPENING IN S.W. — 8

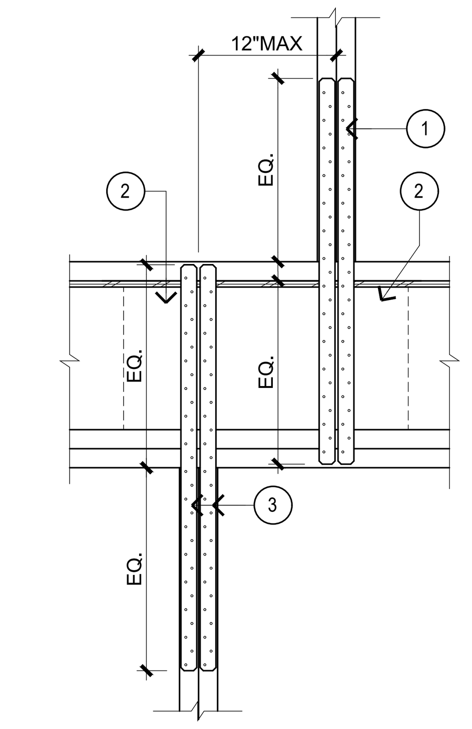

1. STUDS (OR POST) & CS16 STRAPS FROM SHEAR PANEL AT UPPER FLR. TO BE NAILED TO SIDE OF RIM JOIST IN FLOOR SYSTEM. SEE PLANS FOR NO. OF CS16's REQ.
2. ADD SOLID BLK. BEHIND RIM & CONT. 8" PAST STRAPS EA. WAY. NAIL W/(2) ROWS OF 16d's @ 4" O.C.
3. SAME NO. OF CS16 STRAPS APPLIES FROM RIM TO POST AT LOWER FLOOR.

NOTE:
FOR JOISTS PARALLEL TO WALL CONDITIONS ONLY

Ⓡ TIE DWN. AT OFFSET POSTS — 9
FF10

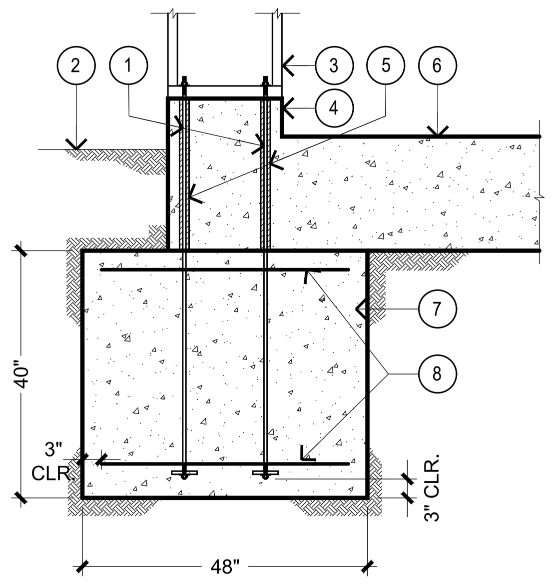

1. TYP. 1 1/8"Ø OR 7/8"Ø THREADED RODS @ PREFABRICATED SHEAR PANEL PER PLAN
2. NATURAL GRADE
3. PREFABRICATED SHEAR PANEL PER PLAN
4. EXISTING CURB WHERE OCCURS..
5. DRILL HOLES IN EXISTING CURB & FOOTING FOR NEW BOLTS. FILL HOLES W/ SIMP. SET EPOXY PRIOR TO BOLT PLACEMENT.
6. TYP. EXISTING FOOTING.
7. NEW 15" WIDE x 48" LONG GRADE BM. CENTERED @ CORRECTLY PLACED PANEL. WHEN FTG. IS MISSING.
8. (2) NEW #5 BARS TOP & BOTT.

FF11

RETROFIT FOR MISSING FOOTING Ⓡ @ PREFABRICATED SHEAR PANEL. — 10

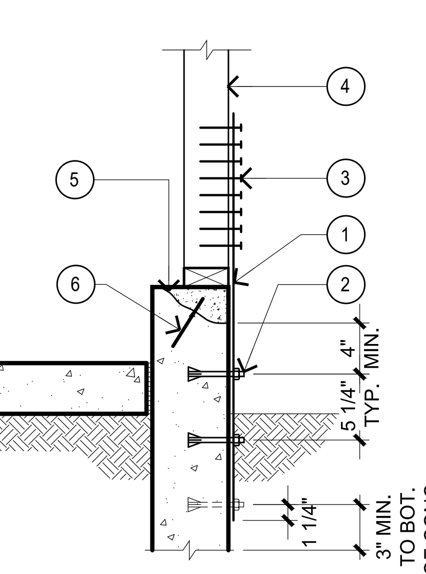

STRAP	# OF BOLTS	# OF NAILS
STHD10	2	(23) NAILS
STHD14	3	(32) NAILS

1. 2 1/16" WIDE x 12GA. STRAP (MST48 OR EQUAL).
2. 1/2" Φ SIMPSON TITEN HD CONCRETE SCREW ANCHORS. ICC-ESR# 2713 WITH 4 1/4" EMBEDMENT. REFER TO ICC AND MANUFACTURER SPECS. FOR INSTALLATION PROCEDURES (SEE TABLE).
3. 16d COMMON NAILS USE 0.162Øx 2 1/2" NAILS. (SEE TABLE).
4. USE 4x4 POST MIN.
5. REPAIR CONC. SPALLING, IF OCCURS, W/ HIGH STRENGTH CONC. MIX.
6. MIN. (2) #4 DOWELS EMBEDED 4 1/2" IN CONC.

NOTES:

ALL METALS EXPOSED TO WEATHER OR EARTH SHALL BE GALVANIZED TREATED AND PROTECED AGAINST CORROSION.

MIN. CONCRETE STRENGTH f'c= 2000psi.

OVERALL LENGTH OF STRAP TO BE SPECIFIED BASED ON SITE CONDITION, BY CONTRACTOR, SIMPSON "MST" STRAP (OR EQUAL) MAY BE USED IF LENGTH IS ADEQUATE.

Ⓡ FIX FOR MISSING HOLDOWN — 11
Ⓡ @ PLACES WHERE HTT5 HOLDOWN FIX CANNOT BE APPLIED
FF12

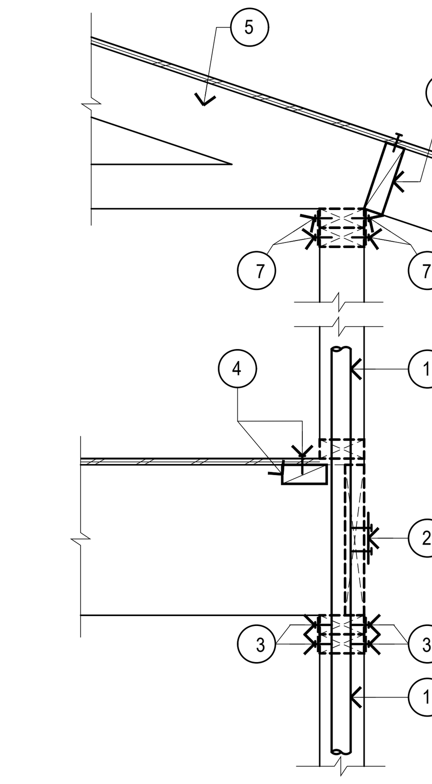

1. PLUMBING OR MECHANICAL LINE IN WALL INTERRUPTING PLATES AND RIM JOIST @ FLOOR LEVEL.
2. SPLICE RIM W/ ST6224 STRAP (U.N.O.) ON PLANS.
3. SPLICE PLATES @ FLR. LEVEL W/ SIMPSON RPS STRAPS W/(6) 16d's @ EA. END OF EA. STRAP. ALT., USE 'ST' STRAP W/(6) 16d's @ EA. END, P/ PLATE. STRAP ONE SIDE ONLY IF PLUMBING CAUSES NOTCH OF PLATE NO MORE THAN 50% OF PLATE WIDTH.
4. ADD NEW FLAT 2x BLK'G MIN. (3) BAYS @ PIPE W/ (4) 10d's PER BLK'G FROM FLOOR SHT'G. AT BAY W/ INTERRUPTED RIM JOIST, ADD ONE ADDITIONAL BLK'G EACH WAY.
5. ROOF MEMBERS.
6. EAVE BLK'G TO REMAIN.
7. SPLICE UPPER TOP PLATES W/ STRAP AS REQ. P/ DRAG DETAIL ON PLANS. STRAP BOTH SIDES W/ SAME STRAP WHEN CUT EXCEEDS 50% OF PLATE WIDTH. USE 16d SHORT NAILS (2 1/2" LONG).

Ⓡ WALL W/ PLUMB./ MECH — 5
FF5

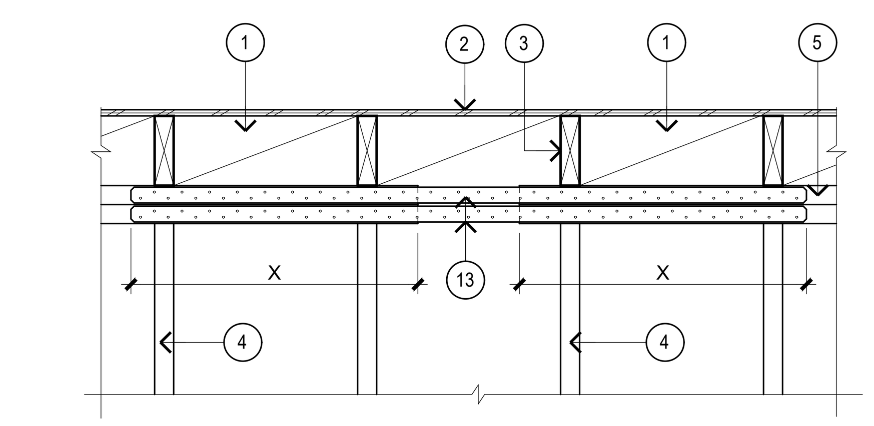

X= LENGTH TO BE ENOUGH TO HAVE MIN. NO. OF NAILS OF SPLICE NAIL AS PER PLAN (STRAPS MUST EXTEND MIN. ONE STUD BAY EACH WAY).

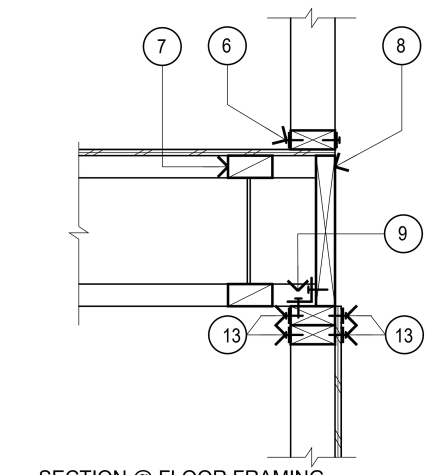

SECTION @ FLOOR FRAMING

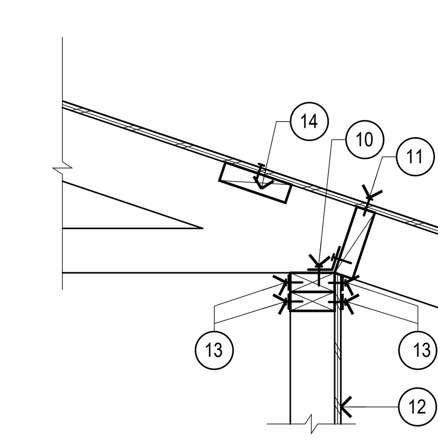

SECTION @ ROOF FRAMING

1. TYP. BLK'G OR RIM.
2. ROOF OR FLOOR SHEATHING.
3. ROOF TRUSS OR TJI's @ SIMILAR CONDITION @ FLOOR.
4. 2x4 STUDS.
5. DBL. TOP PLATES.
6. CS STRAP @ EA. SIDE SOLE PLATE IF CUT.
7. ADD FULL HEIGHT BLK'G W/ SHEATHING E.N. @ AFFECTED BAY AND ONE BAY EA. WAY BEYOND. MIN. (3) BAYS OF BLOCKING.
8. RIM INTERRUPTED @ DUCT.
9. A35 PER PLAN AND MIN. (1) EA. SIDE OF BREAK.
10. A35, PER BLOCK.
11. E.N.
12. SHEAR PANEL.
13. (2) CS16 EA. SIDE W/ 10d's @ 2" O.C. MAX STRAPS TO BE NAILED @ TOP OF SHEAR PANEL AND TO HAVE MIN. NO. OF NAILS EQUAL TO SPLICE NAILING PER PLAN. N 10 NAILS MAY BE USED.
14. ADD 2X6 MIN. BLK'G W/ SHEATHING E.N. @ AFFECTED BAY AND ONE BAY EA. WAY BEYOND. MIN. (3) BAYS OF BLOCKING.

Ⓡ FIELD FIX @ PLATE/RIM BREAK — 6
FF6

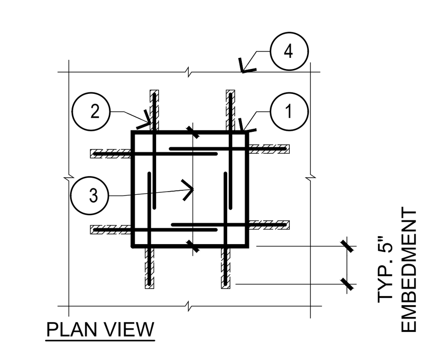

1. OPENING IN CONC. SLAB.
2. TYP. #4 DOWELS @ 12" O.C. (MIN. 2 PER SIDE) EMBEDDED IN SLAB AS SHOWN W/ EPOXY GROUT MIX. USE DOWELS TOP & BOTTOM @ 8" OR THICKER SLAB. PLACE DOWELS APPROXIMATELY 1 3/4" FROM TOP OF SLAB.
3. WIDTH OF OPENING MUST BE MIN. 20" TO ALLOW FOR DOWELING AS SHOWN.
4. PROVIDE VAPOR BARRIER UNDER SLAB

NOTES FOR P.T. SLAB:

- MARK-UP TENDON ROUTE IN BOTH DIRECTIONS ON SLAB SURFACE IN THE VICINITY OF THE PROPOSED OPENING PRIOR TO PROCEEDING WITH THE SLAB EXCAVATION.
- DE-TENSION ALL TENDONS PASSING THRU THE AREA BEING CUT. IF CUTTING BETWEEN TENDONS, NO NEED TO DE-TENSION CABLES, BUT CUT MUST BE 6" AWAY FROM CABLE.
- EXTREME CARE SHALL BE TAKEN NOT TO DAMAGE ANY TENDON DURING REPAIR.
- POUR NEW 4000 PSI CONCRETE TENDONS SHALL NOT BE RE-STRESSED UNTIL NEW CONC. REACHES 3000 PSI. (IN CASE TENDONS WERE DE-TENSIONED).
- SPECIAL INSPECTION IS REQUIRED DURING CONSTRUCTION PROCESS.

Ⓡ FIX FOR CUTS IN SLABS — 7
FF7

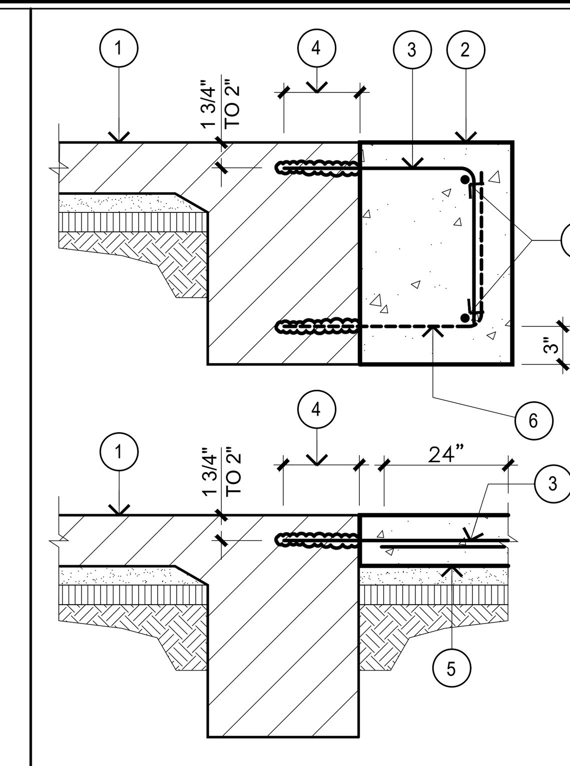

1. EXISTING FOUNDATION
2. NEW FOOTING, MINIMUM SAME SIZE AS EXISTING OR SEE PLAN FOR SIZE.
3. #4 DOWELS @ 18" O.C. BENT AS SHOWN IN FOOTING & OVERLAP MIN. 24" AS SHOWN IN SLAB.
4. MIN. 5" EMBEDMENT OF DOWELS INTO EXISTING CONCRETE W/ SIMPSON SET-XP EPOXY, ESR #2508. PERIODIC SPECIAL INSPECTION IS REQ'D.
5. NEW SLAB PER PLAN
6. ADDITIONAL #4 BOTTOM DOWEL AT ENDS ONLY.
7. FOOTING REINFORCEMENT PER PLAN OR MIN. (1) #4 TOP AND (1) #4 BOTTOM.

ADDITION OF FTN'G./SLAB AT Ⓡ EXISTING FOUNDATION — 1
FF1

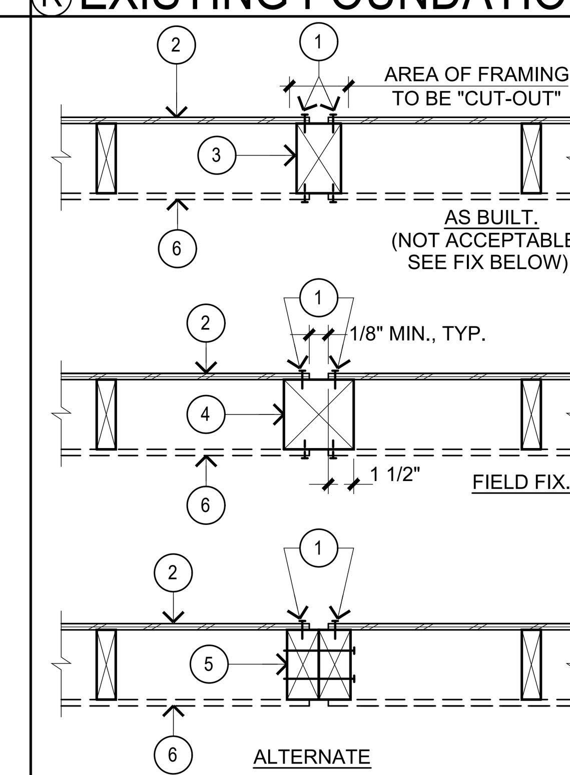

1. EDGE NAILING @ ADJOINING PANEL EDGES, TYP.
2. SHEAR PER PLANS, TYP.
3. 3X MIN. POST (PER SW SCHED.) MIS-INSTALLED W/ A 2X STUD.
4. NEW POST AS SHOWN. POST TO BE SIZED TO ACHIEVE MIN. 1 1/2" OVERLAP OF SHEAR PANEL.
5. ALTERNATE TO 3X MIN. POST PER SW SCHEDULE, USE (2) 2X STUDS W/ 2 ROWS OF 16d SINKER NAILS (ROWS STAGGERED) WITH SPACING IN EACH ROW PER SCHEDULE BELOW.
6. SHEAR PANEL WHERE OCCURS THIS SIDE ALSO, PER PLAN TYP.

PANEL TYPES	NAIL SPACING
2	@ 12" O.C.
3	@ 9" O.C.
4	@ 6" O.C.
5	@ 5" O.C.
DBL SIDED 3	@ 4" O.C.
DBL SIDED 4	@ 3" O.C.
DBL SIDED 5	@ 2 1/2" O.C.

FIX AND ALTERNATE @ ADJOINING Ⓡ PANEL EDGES OF SHEAR WALLS — 2
FF2-120124

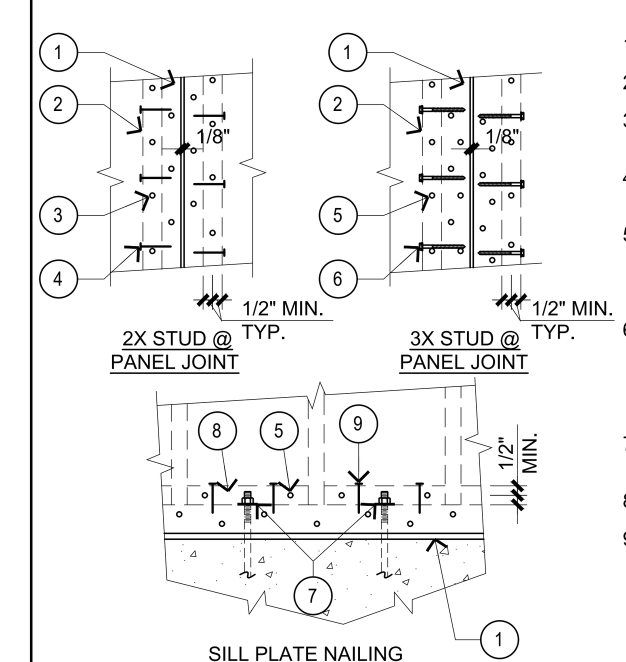

1. EXIST. 2X, 3X PER PLANS.
2. NEW 2X BOTH SIDES.
3. EDGE NAILS TO NEW 2X PER S.W. SCHEDULE.
4. 10d FACE NAILS @ 6" O.C. STAGG. ALONG STUD FACE.
5. EDGE NAILS TO NEW 2X MEMBER @ 2X REQUIRED SPACING (HALF NUMBERS OF NAILS REQ'D.) PER S.W. SCHEDULE.
6. 1/4"Φ x 3 1/2" SDS SCREW FROM NEW 2X TO EXIST. 3X @ 10" O.C. FOR SINGLE SIDED S.W. & @ 5" O.C. FOR DOUBLE SIDED S.W. STAGG. ALONG STUD FACE.
7. NOTCH NEW 2X BLOCKING WHERE ANCHOR BOLT OCCURS.
8. 2X BLOCKING.
9. 10d @ 6" O.C. STAGG. TO (E) 2X SILL PL. PER S.W. SCHED. USE 1/4"Øx3 1/2" SDS SCREWS TO (E) 3X MIN. SILL PLATE PER S.W. SCHED. @ 10" O.C. FOR SINGLE SIDED S.W. & @ 5" O.C. FOR DOUBLE SIDED S.W. STAGGERED FASTENERS ALONG NEW 2X BLOCKING.

Ⓡ FIELD FIX-MISPLACED NAILING — 3
GE118-120124

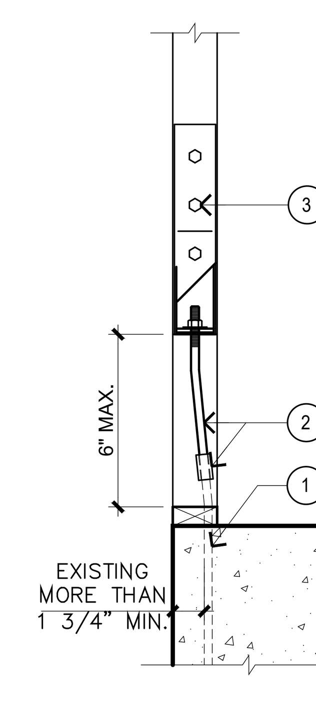

1. EXISTING ANCHOR MISPLACED.
2. USE APPROVED COUPLER AND EXTEND ROD W/ SLIGHT ANGLE TO CENTER ROD IN WALL. USE 12:1 RATIO (12" HIGH FOR 1" OFFSET).
3. RAISE HOLDOWN BRACKET HIGH ON WALL TO RECEIVE EXTENSION ROD.

NOTE:

THIS FIX SHALL NOT BE USED IF ANCHOR IS MISPLACED TOWARD OUTSIDE EDGE OF CONC. DUE TO MIN. EDGE DISTANCE REQUIREMENTS.

Ⓡ MISPLACED HOLDOWN ANCHOR — 4
FF4

GOUVIS engineering consulting group, inc.®

15 Studebaker
Irvine
CA 92618

Irvine
tel 949.752.1612
fax 949.752.5321

Palm Springs
tel 760.323.5090

DATE SIGNED: 2/3/23

RESTRICTIVE NOTICE

THESE DESIGNS, DRAWINGS, AND SPECIFICATIONS ARE THE EXCLUSIVE PROPERTY OF GOUVIS ENGINEERING CONSULTING GROUP. THEY ARE THE SUBJECT OF COPYRIGHT AND OTHER LEGAL PROTECTION. THEY MAY BE USED ONLY BY THEIR INTENDED RECIPIENT AND ONLY FOR THE PROJECT DEPICTED HEREIN. NO PART OF THESE DRAWINGS ARE TO BE COPIED, TRANSFERRED, REPRODUCED, NOR CAN THEY BE USED, IN WHOLE OR IN PART, BY ANY OTHER PERSON OR FOR ANY OTHER PROJECT OR STRUCTURE, WITHOUT THE PRIOR EXPRESS WRITTEN CONSENT OF GOUVIS ENGINEERING CONSULTING GROUP

© 2017 GOUVIS ENGINEERING CONSULTING GROUP INC. - ALL RIGHTS RESERVED

PROJECT:
Tenant Square

DEVELOPER:
Osito Holdings LLC

ARCHITECT:

LOCATION:
Morgan Hill
Santa Clara
CA

REVISIONS

NO.	DATE	DESCRIPTION
1	02/02/23	BLDG DEPT.

SHEET NAME:
STRUCTURAL DETAILS & NOTES

PROJECT NUMBER:
66074

ENGINEER: GE
DRAFTER: GE

SHEET NUMBER:
SN3

ISSUED DATE: 5/5/2022

SYMBOLS LEGEND

- FOOTING
- DROP IN SLAB (VERIFY PRIOR TO CONSTRUCTION)
- REBAR
- PX — PAD NUMBER
- X / SDX — DETAIL NUMBER / DETAIL SHEET NUMBER

S — MAXIMUM SPACING\
X — TOTAL MINIMUM NUMBER OF ANCHOR BOLTS EQUALLY SPACED AS POSSIBLE. SEE GENERAL NOTES ON SN-1 SHEET(S) FOR OTHER REQUIREMENTS. FOR NON-SHEAR WALLS, MASA/MASAP MUDSILL ANCHORS CAN BE USED IN LIEU OF ANCHOR BOLTS, ON A ONE TO ONE BASIS, WITH END DISTANCE OF 4" MIN. PER ESR #2555.

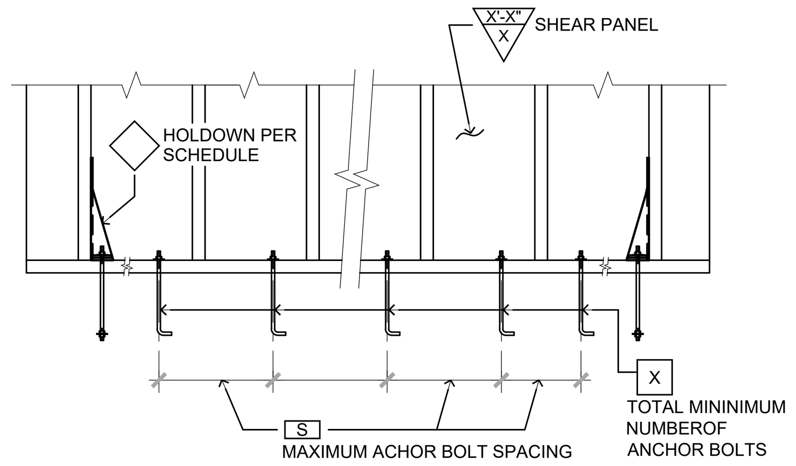

KEY NOTES

1	#5 TOP & BOTT. L=4'-0" RE-ENTRANT CORNER BARS
2	#5 TOP & BOTT. PAST 18" BEYOND POP OUT EA. WAY
3	EXTEND TIE BEAM UNDER SLAB W/ REINFORCEMENT TO BE POURED MONOLITHICALLY WITH SLAB
4	18" WIDE x 24" DEEP x 4'-0" PAST PRE-FAB PANELS CONC. GRADE BM WITH (2)#5 TOP AND (2)#5 BOTTOM

PAD SCHEDULE

SYM.	PAD TYPE
P1	2'-0" SQ. X 18" DEEP PAD W/ (4) #4 E.W.
P2	2'-6" SQ. X 18" DEEP PAD W/ (5) #4 E.W.
P3	3'-0" SQ. X 18" DEEP PAD W/ (6) #4 E.W.
P4	3'-6" SQ. X 18" DEEP PAD W/ (7) #4 E.W.
P5	4'-0" SQ. X 18" DEEP PAD W/ (8) #4 E.W.
P6	4'-6" SQ. X 18" DEEP PAD W/ (9) #4 E.W.
P7	5'-0" SQ. X 18" DEEP PAD W/ (10) #4 E.W.
P8	5'-6" SQ. X 18" DEEP PAD W/ (11) #4 E.W.

POST TENSION NOTES

1. REFER TO SN-1 SHEET FOR MORE INFO.
2. SEE SHEET PT-1 FOR STRUCTURAL DESIGN NOTES AND TECHNICAL PARAMETERS. SEE POST TENSION DESIGN PLANS FOR SPECIAL CONSTRUCTION NOTES, TENDON AND ANCHORAGE INSTALLATION NOTES, CONCRETE PLACEMENT NOTES, TENDON STRESSING PREPARATION NOTES, TENDON STRESSING PROCEDURE NOTES, STRESSING HOLES SEALING NOTES.
3. VERIFY WITH ARCHITECTURAL (AND STRUCTURAL IF BY OTHERS) DESIGN DRAWINGS (SLAB EDGE PLAN) FOR ALL DIMENSIONS SHOWN ON POST-TENSIONED FOUNDATION PLANS AND REFER TO ARCHITECTURAL (AND STRUCTURAL IF BY OTHERS) DRAWINGS FOR ALL REMAINING DIMENSION NOT SHOWN ON POST-TENSIONED FOUNDATION PLANS. NOTIFY BOTH ACHITECT AND ENGINEER PRIOR TO CONSTRUCTION FOR ANY DISCREPANCIES.
4. VERIFY WITH ARCHITECTURAL (AND STRUCTURAL IF BY OTHERS) DRAWINGS FOR ANCHOR BOLT, HOLDOWN CALLOUT INFORMATION AND SHEAR WALL LOCATIONS.
5. REFER TO DETAILS 16/PT-1 AND 17/PT-1 FOR INSTALLATION OF HOLDOWNS.
6. FOR SHEAR PANEL TYPE X'-X" 3, X'-X" 4 & X'-X" 5 ON BOTH SIDES OF WALL, USE MIN. 3X6 SILL PLATES U.N.O.
7. TENDONS EXCEEDING 100 FEET IN LEGNTH'S NEED TWO-WAY STRESSING.

HOLDOWN SCHEDULE

SYM.	HOLDOWNS	MIN. POST SIZE (U.N.O. ON PLAN)	BOLT TYPES	CONC PAD SIZES FOR PAB BOLTS
ST1	STHD10	2-2 x 4 OR 4 x 4		
ST2	STHD14	2-2 x 4 OR 4 x 4		
ST3	STHD10RJ	2-2 x 4 OR 4 x 4		
ST4	STHD14RJ	2-2 x 4 OR 4 x 4		
TD1	HTT5	2-2 x 4 OR 4 x 4	SSTB24 OR PAB5	1'-6" SQ. x 12" DEEP
TD2	HDU8	4 x 4	SSTB28 OR PAB7	2'-3" SQ. x 15" DEEP
TD3	HDQ8	4 x 4	SSTB28 OR PAB7	2'-3" SQ. x 15" DEEP
TD4	HDU11	4 x 6	PAB8	2'-9" SQ. x 16" DEEP
TD5	HDU14	4 x 8	PAB8	2'-9" SQ. x 16" DEEP
TD6	HHDQ11	4 x 6	PAB8	2'-9" SQ. x 16" DEEP
TD7	HHDQ14	4 x 8	PAB8	2'-9" SQ. x 16" DEEP
TD8	HD12	4 x 6	PAB9	3'-2" SQ. x 18" DEEP
TD9	HD19	6 x 6	PAB10	3'-8" SQ. x 20" DEEP

NOTE: REFER TO 16/PT1 FOR TD HOLDOWNS AND 17/PT1 FOR ST HOLDOWNS.

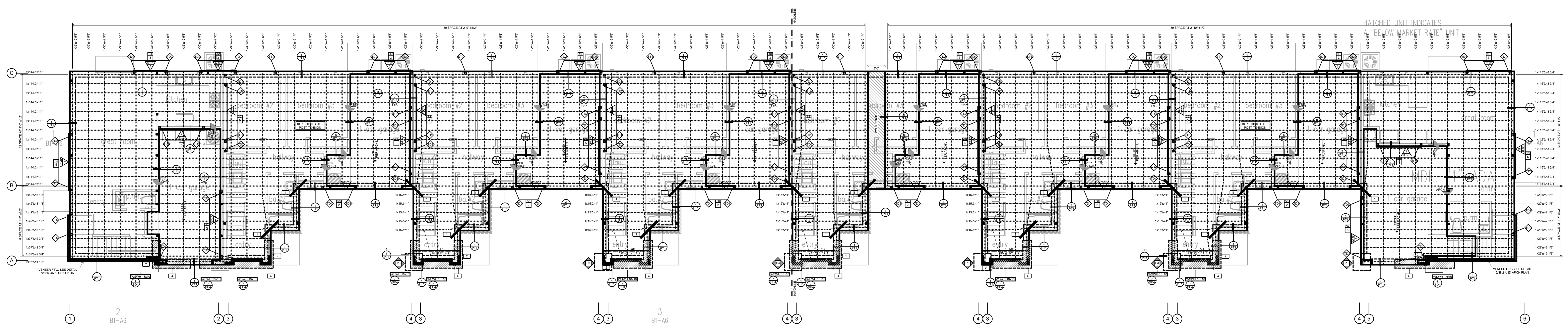

OVERALL FOUNDATION PLAN
BUILDING 1

SCALE : 3/32" = 1'-0"

ISSUED DATE: 5/5/2022

GOUVIS engineering consulting group, inc. ®
15 Studebaker
Irvine
CA 92618

Irvine
tel 949.752.1612
fax 949.752.5321

Palm Springs
tel 760.323.5090

REGISTERED PROFESSIONAL ENGINEER — DISSAKORN EOSAKUL — No. S 5226 — Exp. 6/30/23 — STRUCTURAL — STATE OF CALIFORNIA

DATE SIGNED: 2/3/23

RESTRICTIVE NOTICE

THESE DESIGNS, DRAWINGS, AND SPECIFICATIONS ARE THE EXCLUSIVE PROPERTY OF GOUVIS ENGINEERING CONSULTING GROUP. THEY ARE THE SUBJECT OF COPYRIGHT AND OTHER LEGAL PROTECTION. THEY MAY BE USED ONLY BY THEIR INTENDED RECIPIENT AND ONLY FOR THE PROJECT DEPICTED HEREIN. NO PART OF THESE DRAWINGS ARE TO BE COPIED, TRANSFERRED, REPRODUCED, NOR CAN THEY BE USED, IN WHOLE OR IN PART, BY ANY OTHER PERSON OR FOR ANY OTHER PROJECT OR STRUCTURE, WITHOUT THE PRIOR EXPRESS WRITTEN CONSENT OF GOUVIS ENGINEERING CONSULTING GROUP

© 2017 GOUVIS ENGINEERING CONSULTING GROUP INC. - ALL RIGHTS RESERVED

PROJECT:
Tenant Square

DEVELOPER:
Osito Holdings LLC

ARCHITECT:

LOCATION:
Morgan Hill
Santa Clara
CA

REVISIONS

NO.	DATE	DESCRIPTION
1	02/02/23	BLDG DEPT.

SHEET NAME:
OVERALL FOUNDATION PLAN
BUILDING 1

PROJECT NUMBER:
66074

ENGINEER: GE
DRAFTER: GE

SHEET NUMBER:
S-1.1

SYMBOLS LEGEND

- FOOTING
- DROP IN SLAB (VERIFY PRIOR TO CONSTRUCTION)
- REBAR
- PX — PAD NUMBER
- X / SDX — DETAIL NUMBER / DETAIL SHEET NUMBER
- S / X — MAXIMUM SPACING\ TOTAL MINIMUM NUMBER OF ANCHOR BOLTS EQUALLY SPACED AS POSSIBLE. SEE GENERAL NOTES ON SN-1 SHEET(S) FOR OTHER REQUIREMENTS. FOR NON-SHEAR WALLS, MASA/MASAP MUDSILL ANCHORS CAN BE USED IN LIEU OF ANCHOR BOLTS, ON A ONE TO ONE BASIS, WITH END DISTANCE OF 4" MIN. PER ESR #2555.

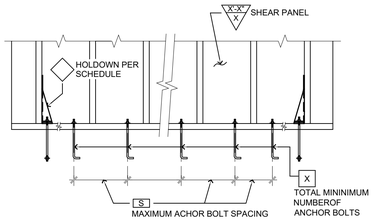

KEY NOTES

1. #5 TOP & BOTT. L=4'-0" RE-ENTRANT CORNER BARS
2. #5 TOP & BOTT. PAST 18" BEYOND POP OUT EA. WAY
3. EXTEND TIE BEAM UNDER SLAB W/ REINFORCEMENT TO BE POURED MONOLITHICALLY WITH SLAB 18" WIDE x 24" DEEP x 4'-0" PAST PRE-FAB PANELS
4. CONC. GRADE BM WITH (2)#5 TOP AND (2)#5 BOTTOM

PAD SCHEDULE

SYM.	PAD TYPE
P1	2'-0" SQ. X 18" DEEP PAD W/ (4) #4 E.W.
P2	2'-6" SQ. X 18" DEEP PAD W/ (5) #4 E.W.
P3	3'-0" SQ. X 18" DEEP PAD W/ (6) #4 E.W.
P4	3'-6" SQ. X 18" DEEP PAD W/ (7) #4 E.W.
P5	4'-0" SQ. X 18" DEEP PAD W/ (8) #4 E.W.
P6	4'-6" SQ. X 18" DEEP PAD W/ (9) #4 E.W.
P7	5'-0" SQ. X 18" DEEP PAD W/ (10) #4 E.W.
P8	5'-6" SQ. X 18" DEEP PAD W/ (11) #4 E.W.

POST TENSION NOTES

1. REFER TO SN-1 SHEET FOR MORE INFO.
2. SEE SHEET PT-1 FOR STRUCTURAL DESIGN NOTES AND TECHNICAL PARAMETERS. SEE POST TENSION DESIGN PLANS FOR SPECIAL CONSTRUCTION NOTES, TENDON AND ANCHORAGE INSTALLATION NOTES, CONCRETE PLACEMENT NOTES, TENDON STRESSING PREPARATION NOTES, TENDON STRESSING PROCEDURE NOTES, STRESSING HOLES SEALING NOTES.
3. VERIFY WITH ARCHITECTURAL (AND STRUCTURAL IF BY OTHERS) DESIGN DRAWINGS (SLAB EDGE PLAN) FOR ALL DIMENSIONS SHOWN ON POST-TENSIONED FOUNDATION PLANS AND REFER TO ARCHITECTURAL (AND STRUCTURAL IF BY OTHERS) DRAWINGS FOR ALL REMAINING DIMENSION NOT SHOWN ON POST-TENSIONED FOUNDATION PLANS. NOTIFY BOTH ACHITECT AND ENGINEER PRIOR TO CONSTRUCTION FOR ANY DISCREPANCIES.
4. VERIFY WITH ARCHITECTURAL (AND STRUCTURAL IF BY OTHERS) DRAWINGS FOR ANCHOR BOLT, HOLDOWN CALLOUT INFORMATION AND SHEAR WALL LOCATIONS.
5. REFER TO DETAILS 16/PT-1 AND 17/PT-1 FOR INSTALLATION OF HOLDOWNS.
6. FOR SHEAR PANEL TYPE X-X/3, X-X/4 & X-X/5 ON BOTH SIDES OF WALL, USE MIN. 3X6 SILL PLATES U.N.O.
7. TENDONS EXCEEDING 100 FEET IN LEGNTH'S NEED TWO-WAY STRESSING.

HOLDOWN SCHEDULE

SYM.	HOLDOWNS	MIN. POST SIZE (U.N.O. ON PLAN)	BOLT TYPES	CONC PAD SIZES FOR PAB BOLTS
ST1	STHD10	2-2 x 4 OR 4 x 4		
ST2	STHD14	2-2 x 4 OR 4 x 4		
ST3	STHD10RJ	2-2 x 4 OR 4 x 4		
ST4	STHD14RJ	2-2 x 4 OR 4 x 4		
TD1	HTT5	2-2 x 4 OR 4 x 4	SSTB24 OR PAB5	1'-6" SQ. x 12" DEEP
TD2	HDU8	4 x 4	SSTB28 OR PAB7	2'-3" SQ. x 15" DEEP
TD3	HDQ8	4 x 4	SSTB28 OR PAB7	2'-3" SQ. x 15" DEEP
TD4	HDU11	4 x 6	PAB8	2'-9" SQ. x 16" DEEP
TD5	HDU14	4 x 8	PAB8	2'-9" SQ. x 16" DEEP
TD6	HHDQ11	4 x 6	PAB8	2'-9" SQ. x 16" DEEP
TD7	HHDQ14	4 x 8	PAB8	2'-9" SQ. x 16" DEEP
TD8	HD12	4 x 6	PAB9	3'-2" SQ. x 18" DEEP
TD9	HD19	6 x 6	PAB10	3'-8" SQ. x 20" DEEP

NOTE: REFER TO 16/PT1 FOR TD HOLDOWNS AND 17/PT1 FOR ST HOLDOWNS.

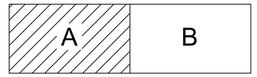

KEYPLAN

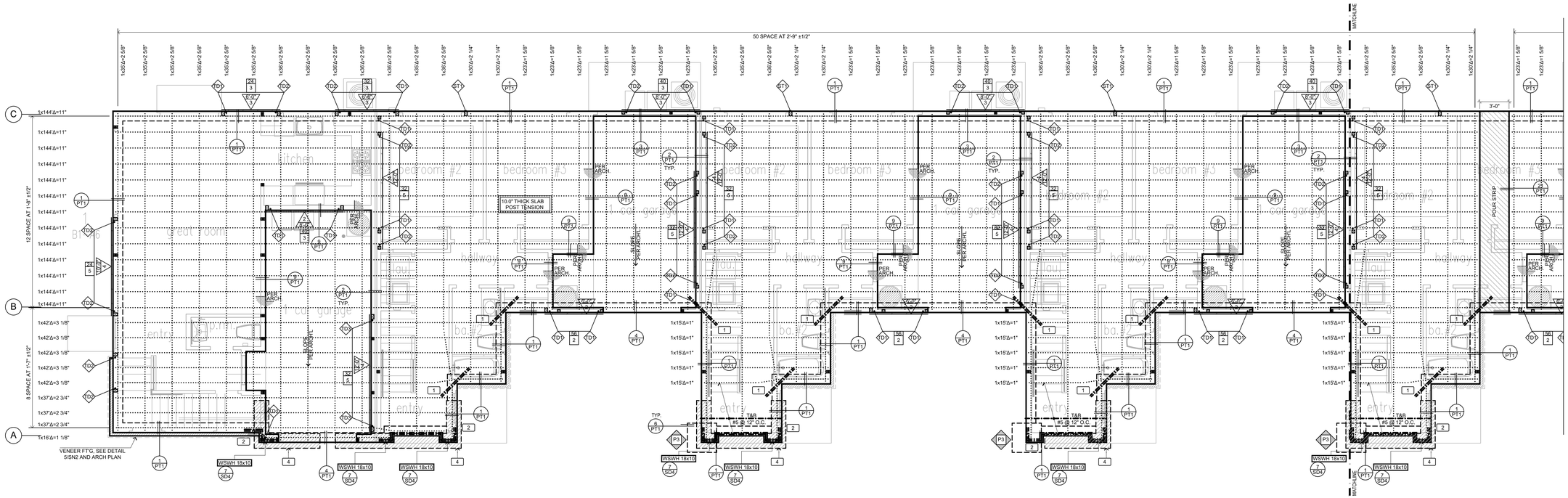

P.T. FOUNDATION PLAN
BUILDING 1 - AREA A

SCALE : 3/16" = 1'-0"

ISSUED DATE: 5/5/2022

GOUVIS engineering consulting group, inc.®
15 Studebaker
Irvine
CA 92618

Irvine
tel 949.752.1612
fax 949.752.5321

Palm Springs
tel 760.323.5090

REGISTERED PROFESSIONAL ENGINEER — DIBAKORN CHAKUL — No. S 5226 — Exp. 6/30/23 — STRUCTURAL — STATE OF CALIFORNIA

DATE SIGNED: 2/3/23

RESTRICTIVE NOTICE

THESE DESIGNS, DRAWINGS, AND SPECIFICATIONS ARE THE EXCLUSIVE PROPERTY OF GOUVIS ENGINEERING CONSULTING GROUP. THEY ARE THE SUBJECT OF COPYRIGHT AND OTHER LEGAL PROTECTION. THEY MAY BE USED ONLY BY THEIR INTENDED RECIPIENT AND ONLY FOR THE PROJECT DEPICTED HEREIN. NO PART OF THESE DRAWINGS ARE TO BE COPIED, TRANSFERRED, REPRODUCED, NOR CAN THEY BE USED, IN WHOLE OR IN PART, BY ANY OTHER PERSON OR FOR ANY OTHER PROJECT OR STRUCTURE, WITHOUT THE PRIOR EXPRESS WRITTEN CONSENT OF GOUVIS ENGINEERING CONSULTING GROUP

© 2017 GOUVIS ENGINEERING CONSULTING GROUP INC. - ALL RIGHTS RESERVED

PROJECT:
Tenant Square

DEVELOPER:
Osito Holdings LLC

ARCHITECT:

LOCATION:
Morgan Hill
Santa Clara
CA

REVISIONS

NO.	DATE	DESCRIPTION
1	02/02/23	BLDG DEPT.

SHEET NAME:
P.T. FOUNDATION PLAN
BUILDING 1 - AREA A

PROJECT NUMBER:
66074

ENGINEER: GE
DRAFTER: GE

SHEET NUMBER:
S-1.1A

SYMBOLS LEGEND

- FOOTING
- DROP IN SLAB (VERIFY PRIOR TO CONSTRUCTION)
- REBAR
- PX — PAD NUMBER
- X / SDX — DETAIL NUMBER / DETAIL SHEET NUMBER
- S / X — MAXIMUM SPACING\ TOTAL MINIMUM NUMBER OF ANCHOR BOLTS EQUALLY SPACED AS POSSIBLE. SEE GENERAL NOTES ON SN-1 SHEET(S) FOR OTHER REQUIREMENTS. FOR NON-SHEAR WALLS, MASA/MASAP MUDSILL ANCHORS CAN BE USED IN LIEU OF ANCHOR BOLTS, ON A ONE TO ONE BASIS, WITH END DISTANCE OF 4" MIN. PER ESR #2555.

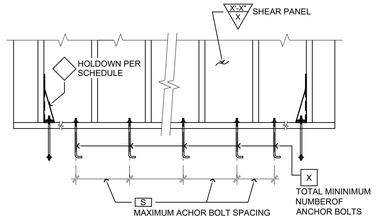

KEY NOTES

1. #5 TOP & BOTT. L=4'-0" RE-ENTRANT CORNER BARS
2. #5 TOP & BOTT. PAST 18" BEYOND POP OUT EA. WAY
3. EXTEND TIE BEAM UNDER SLAB W/ REINFORCEMENT TO BE POURED MONOLITHICALLY WITH SLAB
4. 18" WIDE x 24" DEEP x 4'-0" PAST PRE-FAB PANELS CONC. GRADE BM WITH (2)#5 TOP AND (2)#5 BOTTOM

PAD SCHEDULE

SYM.	PAD TYPE
P1	2'-0" SQ. X 18" DEEP PAD W/ (4) #4 E.W.
P2	2'-6" SQ. X 18" DEEP PAD W/ (5) #4 E.W.
P3	3'-0" SQ. X 18" DEEP PAD W/ (6) #4 E.W.
P4	3'-6" SQ. X 18" DEEP PAD W/ (7) #4 E.W.
P5	4'-0" SQ. X 18" DEEP PAD W/ (8) #4 E.W.
P6	4'-6" SQ. X 18" DEEP PAD W/ (9) #4 E.W.
P7	5'-0" SQ. X 18" DEEP PAD W/ (10) #4 E.W.
P8	5'-6" SQ. X 18" DEEP PAD W/ (11) #4 E.W.

POST TENSION NOTES

1. REFER TO SN-1 SHEET FOR MORE INFO.
2. SEE SHEET PT-1 FOR STRUCTURAL DESIGN NOTES AND TECHNICAL PARAMETERS. SEE POST TENSION DESIGN PLANS FOR SPECIAL CONSTRUCTION NOTES, TENDON AND ANCHORAGE INSTALLATION NOTES, CONCRETE PLACEMENT NOTES, TENDON STRESSING PREPARATION NOTES, TENDON STRESSING PROCEDURE NOTES, STRESSING HOLES SEALING NOTES.
3. VERIFY WITH ARCHITECTURAL (AND STRUCTURAL IF BY OTHERS) DESIGN DRAWINGS (SLAB EDGE PLAN) FOR ALL DIMENSIONS SHOWN ON POST-TENSIONED FOUNDATION PLANS AND REFER TO ARCHITECTURAL (AND STRUCTURAL IF BY OTHERS) DRAWINGS FOR ALL REMAINING DIMENSION NOT SHOWN ON POST-TENSIONED FOUNDATION PLANS. NOTIFY BOTH ACHITECT AND ENGINEER PRIOR TO CONSTRUCTION FOR ANY DISCREPANCIES.
4. VERIFY WITH ARCHITECTURAL (AND STRUCTURAL IF BY OTHERS) DRAWINGS FOR ANCHOR BOLT, HOLDOWN CALLOUT INFORMATION AND SHEAR WALL LOCATIONS.
5. REFER TO DETAILS 16/PT-1 AND 17/PT-1 FOR INSTALLATION OF HOLDOWNS.
6. FOR SHEAR PANEL TYPE X-X/3, X-X/4 & X-X/5 ON BOTH SIDES OF WALL,

   USE MIN. 3X6 SILL PLATES U.N.O.
7. TENDONS EXCEEDING 100 FEET IN LEGNTH'S NEED TWO-WAY STRESSING.

HOLDOWN SCHEDULE

SYM.	HOLDOWNS	MIN. POST SIZE (U.N.O. ON PLAN)	BOLT TYPES	CONC PAD SIZES FOR PAB BOLTS
ST1	STHD10	2-2 x 4 OR 4 x 4		
ST2	STHD14	2-2 x 4 OR 4 x 4		
ST3	STHD10RJ	2-2 x 4 OR 4 x 4		
ST4	STHD14RJ	2-2 x 4 OR 4 x 4		
TD1	HTT5	2-2 x 4 OR 4 x 4	SSTB24 OR PAB5	1'-6" SQ. x 12" DEEP
TD2	HDU8	4 x 4	SSTB28 OR PAB7	2'-3" SQ. x 15" DEEP
TD3	HDQ8	4 x 4	SSTB28 OR PAB7	2'-3" SQ. x 15" DEEP
TD4	HDU11	4 x 6	PAB8	2'-9" SQ. x 16" DEEP
TD5	HDU14	4 x 8	PAB8	2'-9" SQ. x 16" DEEP
TD6	HHDQ11	4 x 6	PAB8	2'-9" SQ. x 16" DEEP
TD7	HHDQ14	4 x 8	PAB8	2'-9" SQ. x 16" DEEP
TD8	HD12	4 x 6	PAB9	3'-2" SQ. x 18" DEEP
TD9	HD19	6 x 6	PAB10	3'-8" SQ. x 20" DEEP

NOTE: REFER TO 16/PT1 FOR TD HOLDOWNS AND 17/PT1 FOR ST HOLDOWNS.

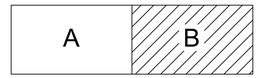

KEYPLAN

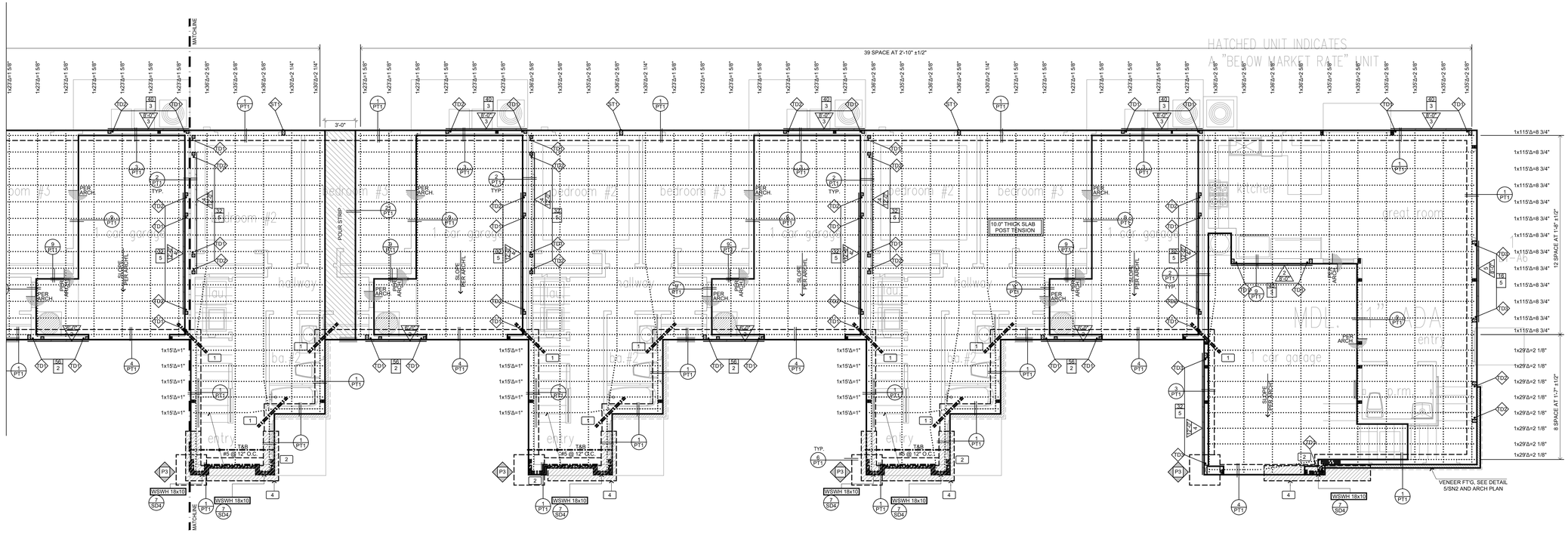

HATCHED UNIT INDICATES A "BELOW MARKET RATE" UNIT

P.T. FOUNDATION PLAN
BUILDING 1 - AREA B

SCALE : 3/16" = 1'-0"

ISSUED DATE: 5/5/2022

GOUVIS engineering consulting group, inc.®
15 Studebaker
Irvine
CA 92618

Irvine
tel 949.752.1612
fax 949.752.5321

Palm Springs
tel 760.323.5090

REGISTERED PROFESSIONAL ENGINEER — DIBAKORN CHAKRAVORTI — No. S 5226 — Exp. 6/30/23 — STRUCTURAL — STATE OF CALIFORNIA

DATE SIGNED: 2/3/23

RESTRICTIVE NOTICE

THESE DESIGNS, DRAWINGS, AND SPECIFICATIONS ARE THE EXCLUSIVE PROPERTY OF GOUVIS ENGINEERING CONSULTING GROUP. THEY ARE THE SUBJECT OF COPYRIGHT AND OTHER LEGAL PROTECTION. THEY MAY BE USED ONLY BY THEIR INTENDED RECIPIENT AND ONLY FOR THE PROJECT DEPICTED HEREIN. NO PART OF THESE DRAWINGS ARE TO BE COPIED, TRANSFERRED, REPRODUCED, NOR CAN THEY BE USED, IN WHOLE OR IN PART, BY ANY OTHER PERSON OR FOR ANY OTHER PROJECT OR STRUCTURE, WITHOUT THE PRIOR EXPRESS WRITTEN CONSENT OF GOUVIS ENGINEERING CONSULTING GROUP

© 2017 GOUVIS ENGINEERING CONSULTING GROUP INC. - ALL RIGHTS RESERVED

PROJECT:
Tenant Square

DEVELOPER:
Osito Holdings LLC

ARCHITECT:

LOCATION:
Morgan Hill
Santa Clara
CA

REVISIONS

NO.	DATE	DESCRIPTION
1	02/02/23	BLDG DEPT.

SHEET NAME:
P.T. FOUNDATION PLAN
BUILDING 1 - AREA B

PROJECT NUMBER:
66074

ENGINEER: GE
DRAFTER: GE

SHEET NUMBER:
S-1.1B

SYMBOLS LEGEND

- POST OR TRIMMER AS NOTED
- DIRECTION OF ROOF MEMBER PER SCHEDULE, REFER TO HATCHED WALLS ON PLANS FOR INTERMEDIATE BR'G
- DIRECTION OF FLOOR MEMBER PER SCHEDULE, REFER TO HATCHED WALLS ON PLANS FOR INTERMEDIATE BR'G
- DIRECTION OF DECK MEMBER PER SCHEDULE, REFER TO HATCHED WALLS ON PLANS FOR INTERMEDIATE BR'G
- SHEAR PANEL LENGTH AND NUMBER. REFER TO SN-1 FOR PANEL TYPE
- DETAIL NUMBER / DETAIL SHEET NUMBER
- BEAM NUMBER, REFER TO GOUVIS ENGINEERING CALCULATIONS
- XXX - X.XE: MINIMUM MODULUS OF ELASTICITY (E) / BEAM SIZE, SEE BEAM SCHEDULE
- KEY NOTE NUMBER
- BEARING WALL
- CALIFORNIA FRAMING

KEY NOTES

1. CONTINUOUS 1 1/4" WIDE MIN. LVL / TIMBERSTRAND OR SPLICE PER PLAN.
2. ALIGN POST(S) WITH UPPER FLOOR POST(S), SEE DETAIL 2-SN2
3. CONTINUOUS JOIST W/ E.N.
4. DRAG STRUT W/E.N., SEE PLANS/DETAILS FOR LENGTH. SUPPORT END W/ BLK'G
5. LINE OF 2X FLAT BLOCKING W/ EDGE NAIL & CONTINUOUS CS16 STRAP OVER U.N.O. SEE PLAN FOR NUMBER OF BAYS.
6. CONTINUOUS FULL HT. BLKG. W/E.N. SEE PLANS FOR NUMBER OF BAYS (U.N.O.)
7. CONTINUOUS LINE OF BLOCKING W/ EDGE NAIL UNDER SHEAR WALL ABOVE W/ (1) CS16, U.N.O.
8. BLOCKED ROOF DIAPHRAGM W/ 8d's @ 4" O.C. B.N., 6" O.C. E.N. & 12" O.C. F.N.
9. BLOCKED FLOOR DIAPHRAGM W/ 10d's @ 4" O.C. B.N., 6" O.C. E.N. & 12" O.C. F.N.
10. SHEAR TRUSS W/E.N. TRUSS TO TRANSFER 180 PLF MIN. (U.N.O.)
11. TRUSS HANGER BY TRUSS SUPPLIER
12. (1) SIMPSON HTS20 FLUSH BEAM TO DROP BEAM (U.N.O.)
13. PROVIDE SOLID BLOCKING
14. DRAG TRUSS W/E.N. TRUSS TO TRANSFER 1700# FORCE MIN. (U.N.O.)
15. BLOCKED OPENING SEE DETAIL 15/SD2
16. CONTINUOUS SHEAR TRUSS W/ E.N OVER EACH PARTY WALL AT ROOF LEVEL DESIGN TRUSS TO TRANSFER 180 PLF MIN. LATERALLY.
17. COUNTERSINK AS REQUIRED NO OVER CUT.

FRAMING SCHEDULE

1. DESIGNED ROOF TRUSSES @ 24" O.C.
2. 14" TJI 210 I-JOISTS (OR EQUAL) @ 19.2" O.C.
3. 14" TJI 210 I-JOISTS (OR EQUAL) @ 16" O.C.
4. 14" TJI 230 I-JOISTS (OR EQUAL) @ 16" O.C.
5. 14" TJI 360 I-JOISTS (OR EQUAL) @ 12" O.C.
6. 2 x 12 DECK JOISTS @ 16" O.C.
7. 2 X 10 ROOF JOISTS / RAFTERS @ 16" O.C.
8. METAL RIBBED ALUMINUM ROOF BY OTHERS. ALT. 2 X 8 ROOF JOISTS @ 16" O.C.

MANUFACTURER		I LEVEL BY WEYERHAEUSER	LOUISIANA PACIFIC	BOISE CASCADE	ROSEBURG
ICC-ES REPORT		ESR-1153	ESR-1305	ESR-1336	ESR-1251
DEPTH	11 7/8"	TJI 210	LPI 36	BCI 6000-1.7	RFPI-400
		TJI 360	LPI 56	BCI 60-2.0	RFPI-70
		TJI 560	N/A	BCI 90-2.0	RFPI-90
	14" & 16"	TJI 210	LPI 530	BCI 6000-1.8	RFPI-400
		TJI 360	LPI 56	BCI 60-2.0	RFPI-70
		TJI 560	N/A	N/A	RFPI-90

FRAMING NOTES

1. REFER TO STRUCTURAL GENERAL NOTES AND DETAIL SHEETS (SN-1 & SN-2) FOR MORE INFORMATION.
2. REFER TO DETAIL 3/SN2 FOR TYPICAL CONNECTION AT ALL INTERIOR NON-BEARING WALLS AT ROOF LEVEL.
3. SHEAR WALLS CANNOT BE USED AS PLUMBING WALLS, UNLESS APPROVED BY GOUVIS ENGINEERING CONSULTING GROUP IN WRITING.
4. AT DOUBLE SIDED SHEAR WALLS, POST W/E.N. PER PLAN TO RECEIVE E.N. FROM BOTH SIDES.
5. WHEN MULTIPLE STUDS ARE USED INSTEAD OF A SINGLE POST, PLYWOOD SHEAR WALL TO BE NAILED TO ALL STUDS RECEIVING HOLDOWNS.
6. APPLY SHEAR PRIOR TO FRAMING OF PERPPENDICULAR WALLS. DO NOT BREAK SHEAR AT PERPENDICULAR WALL LOCATIONS UNLESS SPECIFICALLY DETAILED ON PLANS.

7. ALL VERTICAL PIPES THROUGH PLATES AND/OR SOLID RIM BEAMS MUST BE DRILLED CLEAN CUT W/ 1/16" TOLERANCE. DO NOT NOTCH OR CUT PLATES.
8. ALL BEAMS SHOWN ARE DROP (U.N.O.) ON PLANS.
9. AS AN ALTERNATE TO USING SIMPSON PRODUCTS OTHER CONNECTORS CAN BE USED, AS LONG AS THEIR CAPACITIES ARE EQUAL TO OR BETTER THAN SIMPSON'S, AND SUBJECTED TO THE APPROVAL OF GOUVIS ENGINERING.
10. USE SIMPSON " IUS/ITS/U310 " HANGERS FOR CONNECTION OF I-JOISTS TO OTHER FRAMING MEMBERS (U.N.O.) AND " LUS " HANGERS FOR CONNECTION OF SOLID JOISTS.
11. ALL WOOD I-JOISTS SHALL BE IN COMPLIANCE WITH THE PROVISIONS OF APA PRI-400, EWS-Z725B (PERFORMANCE RATED I-JOIST STANDARD) OR ASTM D5055. QUALIFIED PRI-400, MANUFACTURED. I-JOIST CAN BE ANY OF THOSE LISTED IN THE TABLE ABOVE.
12. ENGINEERING WOOD PRODUCTS (EWP) CAN BE FROM ANY MANUFACTURER WITH CURRENT APPROVED ICC ES - EVALUATION REPORT WITH THE FOLLOWING MECHANICAL PROPERTIES:
    Fb = 2800 psi (MIN), Fv = 285 psi (MIN), E = 2.2 x 10^6 psi (MIN).
    Fb = 2800 psi (MIN), Fv = 285 psi (MIN), E = 2.0 x 10^6 psi (MIN).
    Fb = 2325 psi (MIN), Fv = 285 psi (MIN), E = 1.55 x 10^6 psi (MIN).
    Fb = 1700 psi (MIN), Fv = 285 psi (MIN), E = 1.3 x 10^6 psi (MIN).
    FOR MANUFACTURED RIM BOARD WITH MIN 1 1/4" THICK, CONTINUOUSLY SUPPORTED BY WALL, AND MATCHES JOIST DEPTH:
    Fc ⊥ (PERPENDICULAR)..... = 680 psi (MIN) Ft = 1075 psi (MIN),
    Fc // (PARALLEL)..... = 1400 psi (MIN) E = 1.3 x 10^6 psi (MIN)
    GLU-LAM BEAM SHALL BE:
    24F-V4, DF/DF : Fb = 2400/ 1850 psi @ BOTTOM/ TOP, Fv = 265 psi, E = 1.8 x 10^6 psi (MIN).
    24F-V8, DF/DF : Fb = 2400 psi @ BOTTOM & TOP, Fv = 265 psi, E = 1.8 x 10^6 psi (MIN).
13. A 4x6 (ALT. 2-2x6) HDR. SHOULD BE USED AT ALL OPENINGS IN EXTERIOR & INTERIOR BEARING WALLS U.N.O. ON PLANS. REFER TO THE FOLLOWING TABLE FOR OTHER COMMON HEADER SIZES.

PLAN DESIGNATION	HEADER SIZE	ALT. HEADER SIZE *
H1	4 x 6	2 - 2 x 6
H2	4 x 8	2 - 2 x 8

* 2-2 x SHALL BE PLACED ON END W/ 1/2" PLYWOOD SHIM BETWEEN. PROVIDE 16d NAILS @ 16" O.C., STAGG., BOTH SIDES.

14. THE FOLLOWING TRIMMER SCHEDULE SHOULD BE USED FOR HEADERS IN BEARING WALLS, U.N.O. ON THE PLAN. REQUIRED TRIMMER MUST BE APPLIED @ EACH END OF HEADER.

CLEAR SPAN, L		
L ≤ 6'-0"	6'-0" < L ≤ 10'-0"	L ≥ 10'-0"
2 x	2-2 x	SEE PLAN

15. FLOOR TO FLOOR HOLDOWN (H) APPLY DETAIL AT EACH END OF SHEAR WALL PER PLAN. (2) LOCATIONS PER WALL AS SHOWN BELOW. SEE TABLE FOR TYPE & DETAIL REFFERENCE. MIN. POST SIZE IS NOTED IN THE DETAIL

PER PLAN	REFERENCE & APPLY DETAIL	PER PLAN	REFERENCE & APPLY DETAIL	PER PLAN	REFERENCE & APPLY DETAIL
A	1A / SD-3	C*	1C* / SD-3	F	1F / SD-3
B	1B / SD-3	D	1D / SD-3	G	1G / SD-3
C	1C / SD-3	E	1E / SD-3	H	1H / SD-3

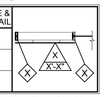

16. INTERIOR NON-BEARING & NON-SHEAR WALLS MAY BE FRAMED WITH 2x STUDS AT 24" O.C., MAX.
17. TOP PLATES AT ALL ROOF FRAMING LEVELS SHOULD BE SPLICED PER 9A/SD2, U.N.O. ON PLANS.
18. CONTINUOUS 1 ½" LSL RIM JOISTS SHOULD BE USED AT ALL FLOOR FRAMING EDGES WHERE POSSIBLE. ALL RIM BREAKS SHOULD BE SPLICED WITH A SINGLE CS16 x 36" STRAP, PER 4A/SD2 U.NO. ON PLANS.
19. ATTACH WOOD FRAMING ELEMENT TO STEEL MEMBER WITH 1/2" Ø STUD BOLTS AT 24" O.C. STAGGERED U.N.O
20. REFER TO ARCHITECTURAL PLANS/DETAILS FOR BEAM/COLUMN FIRE RESISTANCE ASSEMBLIES.
21. TIGHT FIT SOLID COMPRESSION BLOCKING REQUIRED BETWEEN DRAG MEMBERS, FILLING GAP AT PARTY WALLS.

STUD AND TRIMMER SCHEDULE

24	2X4 STUD	226	2-2X6 STUD	24T	2X4 TRIMMER	26T	2-2X6 TRIMMER
26	2X6 STUD	324	3-2X4 STUD	26T	2X6 TRIMMER	24T	3-2X4 TRIMMER
224	2-2X4 STUD	326	3-2X6 STUD	22T	2-2X4 TRIMMER	26T	3-2X6 TRIMMER

POST AND TRIMMER SCHEDULE

44	4X4 POST	412	4X12 POST	44T	4X4 TRIMMER	66T	6X6 TRIMMER
46	4X6 POST	66	6X6 POST	46T	4X6 TRIMMER	68T	6X8 TRIMMER
48	4X8 POST	68	6X8 POST	48T	4X8 TRIMMER	88T	8X8 TRIMMER
410	4X10 POST	88	8X8 POST				

BEAM SCHEDULE

414-1.55E	3 1/2"x14" 1.55E EWP FL BM
214-1.55E	1 3/4"x14" 1.55E EWP FL BM
414-2.0E	3 1/2"X14" 2.0E EWP FL BM
614-2.0E	5 1/4"X14" 2.0E EWP FL BM

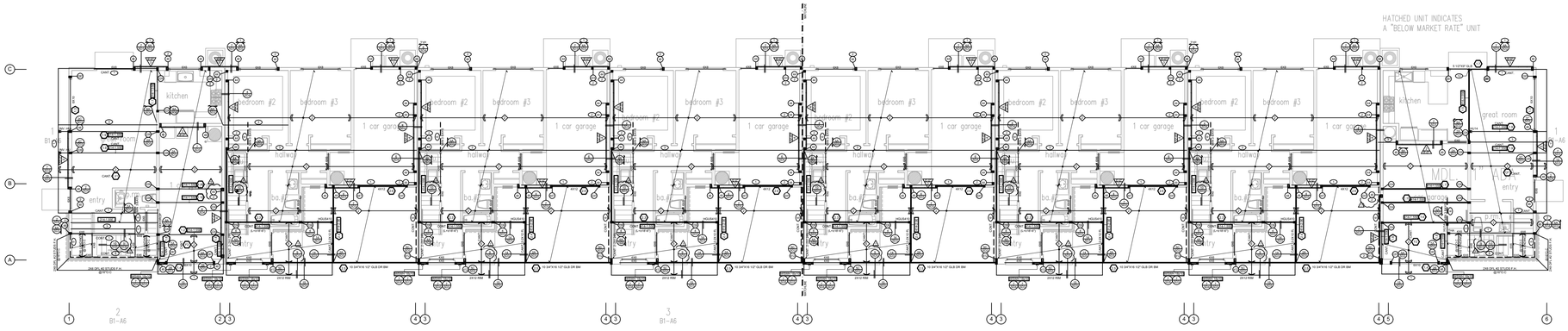

OVERALL FLOOR FRAMING PLAN
BUILDING 1

SCALE : 3/32" = 1'-0"

ISSUED DATE: 5/5/2022

GOUVIS engineering
consulting group, inc.
15 Studebaker
Irvine
CA 92618

Irvine
tel 949.752.1612
fax 949.752.5321

Palm Springs
tel 760.323.5090

REGISTERED PROFESSIONAL ENGINEER
DIRAKORN COMATUL
No. S 5226
Exp. 6/30/23
STRUCTURAL
STATE OF CALIFORNIA

DATE SIGNED: 2/3/23

RESTRICTIVE NOTICE

THESE DESIGNS, DRAWINGS, AND SPECIFICATIONS ARE THE EXCLUSIVE PROPERTY OF GOUVIS ENGINEERING CONSULTING GROUP. THEY ARE THE SUBJECT OF COPYRIGHT AND OTHER LEGAL PROTECTION. THEY MAY BE USED ONLY BY THEIR INTENDED RECIPIENT AND ONLY FOR THE PROJECT DEPICTED HEREIN. NO PART OF THESE DRAWINGS ARE TO BE COPIED, TRANSFERRED, REPRODUCED, NOR CAN THEY BE USED, IN WHOLE OR IN PART, BY ANY OTHER PERSON OR FOR ANY OTHER PROJECT OR STRUCTURE, WITHOUT THE PRIOR EXPRESS WRITTEN CONSENT OF GOUVIS ENGINEERING CONSULTING GROUP

© 2017 GOUVIS ENGINEERING CONSULTING GROUP INC. - ALL RIGHTS RESERVED

PROJECT:
Tenant Square

DEVELOPER:
Osito Holdings LLC

ARCHITECT:

LOCATION:
Morgan Hill
Santa Clara
CA

REVISIONS

NO.	DATE	DESCRIPTION
1	02/02/23	BLDG DEPT.

SHEET NAME:
OVERALL FLOOR FRAMING PLAN BUILDING 1

PROJECT NUMBER:
66074

ENGINEER: GE
DRAFTER: GE

SHEET NUMBER:
S-1.2

SYMBOLS LEGEND

- POST OR TRIMMER AS NOTED
- DIRECTION OF ROOF MEMBER PER SCHEDULE, REFER TO HATCHED WALLS ON PLANS FOR INTERMEDIATE BR'G
- DIRECTION OF FLOOR MEMBER PER SCHEDULE, REFER TO HATCHED WALLS ON PLANS FOR INTERMEDIATE BR'G
- DIRECTION OF DECK MEMBER PER SCHEDULE, REFER TO HATCHED WALLS ON PLANS FOR INTERMEDIATE BR'G
- SHEAR PANEL LENGTH AND NUMBER. REFER TO SN-1 FOR PANEL TYPE
- DETAIL NUMBER / DETAIL SHEET NUMBER
- BEAM NUMBER, REFER TO GOUVIS ENGINEERING CALCULATIONS
- XXX - X.XE — MINIMUM MODULUS OF ELASTICITY (E) / BEAM SIZE, SEE BEAM SCHEDULE
- KEY NOTE NUMBER
- BEARING WALL
- CALIFORNIA FRAMING

KEY NOTES

1. CONTINUOUS 1 1/4" WIDE MIN. LVL / TIMBERSTRAND OR SPLICE PER PLAN.
2. ALIGN POST(S) WITH UPPER FLOOR POST(S), SEE DETAIL 2-SN2
3. CONTINUOUS JOIST W/ E.N.
4. DRAG STRUT W/E.N.. SEE PLANS/DETAILS FOR LENGTH. SUPPORT END W/ BLK'G
5. LINE OF 2X FLAT BLOCKING W/ EDGE NAIL & CONTINUOUS CS16 STRAP OVER U.N.O. SEE PLAN FOR NUMBER OF BAYS.
6. CONTINUOUS FULL HT. BLKG. W/E.N. SEE PLANS FOR NUMBER OF BAYS (U.N.O.)
7. CONTINUOUS LINE OF BLOCKING W/ EDGE NAIL UNDER SHEAR WALL ABOVE W/ (1) CS16, U.N.O.
8. BLOCKED ROOF DIAPHRAGM W/ 8d's @ 4" O.C. B.N., 6" O.C. E.N. & 12" O.C. F.N.
9. BLOCKED FLOOR DIAPHRAGM W/ 10d's @ 4" O.C. B.N., 6" O.C. E.N. & 12" O.C. F.N.
10. SHEAR TRUSS W/E.N. TRUSS TO TRANSFER 180 PLF MIN. (U.N.O.)
11. TRUSS HANGER BY TRUSS SUPPLIER
12. (1) SIMPSON HTS20 FLUSH BEAM TO DROP BEAM (U.N.O.)
13. PROVIDE SOLID BLOCKING
14. DRAG TRUSS W/E.N. TRUSS TO TRANSFER 1700# FORCE MIN. (U.N.O.)
15. BLOCKED OPENING SEE DETAIL 15/SD2
16. CONTINUOUS SHEAR TRUSS W/ E.N OVER EACH PARTY WALL AT ROOF LEVEL DESIGN TRUSS TO TRANSFER 180 PLF MIN. LATERALLY.
17. COUNTERSINK AS REQUIRED NO OVER CUT.

FRAMING SCHEDULE

1. DESIGNED ROOF TRUSSES @ 24" O.C.
2. 14" TJI 210 I-JOISTS (OR EQUAL) @ 19.2" O.C.
3. 14" TJI 210 I-JOISTS (OR EQUAL) @ 16" O.C.
4. 14" TJI 230 I-JOISTS (OR EQUAL) @ 16" O.C.
5. 14" TJI 360 I-JOISTS (OR EQUAL) @ 12" O.C.
6. 2 x 12 DECK JOISTS @ 16" O.C.
7. 2 X 10 ROOF JOISTS / RAFTERS @ 16" O.C.
8. METAL RIBBED ALUMINUM ROOF BY OTHERS. ALT. 2 X 8 ROOF JOISTS @ 16" O.C.

MANUFACTURER		I LEVEL BY WEYERHAEUSER	LOUISIANA PACIFIC	BOISE CASCADE	ROSEBURG
ICC-ES REPORT		ESR-1153	ESR-1305	ESR-1336	ESR-1251
DEPTH	11 7/8"	TJI 210	LPI 36	BCI 6000-1.7	RFPI-400
		TJI 360	LPI 56	BCI 60-2.0	RFPI-70
		TJI 560	N/A	BCI 90-2.0	RFPI-90
	14" & 16"	TJI 210	LPI 530	BCI 6000-1.8	RFPI-400
		TJI 360	LPI 56	BCI 60-2.0	RFPI-70
		TJI 560	N/A	N/A	RFPI-90

FRAMING NOTES

1. REFER TO STRUCTURAL GENERAL NOTES AND DETAIL SHEETS (SN-1 & SN-2) FOR MORE INFORMATION.
2. REFER TO DETAIL 3/SN2 FOR TYPICAL CONNECTION AT ALL INTERIOR NON-BEARING WALLS AT ROOF LEVEL.
3. SHEAR WALLS CANNOT BE USED AS PLUMBING WALLS, UNLESS APPROVED BY GOUVIS ENGINEERING CONSULTING GROUP IN WRITING.
4. AT DOUBLE SIDED SHEAR WALLS, POST W/E.N. PER PLAN TO RECEIVE E.N. FROM BOTH SIDES.
5. WHEN MULTIPLE STUDS ARE USED INSTEAD OF A SINGLE POST, PLYWOOD SHEAR WALL TO BE NAILED TO ALL STUDS RECEIVING HOLDOWNS.
6. APPLY SHEAR PRIOR TO FRAMING OF PERPPENDICULAR WALLS. DO NOT BREAK SHEAR AT PERPENDICULAR WALL LOCATIONS UNLESS SPECIFICALLY DETAILED ON PLANS.

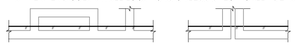

7. ALL VERTICAL PIPES THROUGH PLATES AND/OR SOLID RIM BEAMS MUST BE DRILLED CLEAN CUT W/ 1/16" TOLERANCE. DO NOT NOTCH OR CUT PLATES.
8. ALL BEAMS SHOWN ARE DROP (U.N.O.) ON PLANS.
9. AS AN ALTERNATE TO USING SIMPSON PRODUCTS OTHER CONNECTORS CAN BE USED, AS LONG AS THEIR CAPACITIES ARE EQUAL TO OR BETTER THAN SIMPSON'S, AND SUBJECTED TO THE APPROVAL OF GOUVIS ENGINERING.
10. USE SIMPSON " IUS/ITS/U310 " HANGERS FOR CONNECTION OF I-JOISTS TO OTHER FRAMING MEMBERS (U.N.O.) AND " LUS " HANGERS FOR CONNECTION OF SOLID JOISTS.
11. ALL WOOD I-JOISTS SHALL BE IN COMPLIANCE WITH THE PROVISIONS OF APA PRI-400, EWS-Z725B (PERFORMANCE RATED I-JOIST STANDARD) OR ASTM D5055. QUALIFIED PRI-400, MANUFACTURED. I-JOIST CAN BE ANY OF THOSE LISTED IN THE TABLE ABOVE.
12. ENGINEERING WOOD PRODUCTS (EWP) CAN BE FROM ANY MANUFACTURER WITH CURRENT APPROVED ICC ES - EVALUATION REPORT WITH THE FOLLOWING MECHANICAL PROPERTIES:
    Fb = 2800 psi (MIN), Fv = 285 psi (MIN), E = 2.2 x 10^6 psi (MIN).
    Fb = 2800 psi (MIN), Fv = 285 psi (MIN), E = 2.0 x 10^6 psi (MIN).
    Fb = 2325 psi (MIN), Fv = 285 psi (MIN), E = 1.55 x 10^6 psi (MIN).
    Fb = 1700 psi (MIN), Fv = 285 psi (MIN), E = 1.3 x 10^6 psi (MIN).
    FOR MANUFACTURED RIM BOARD WITH MIN 1 1/4" THICK, CONTINUOUSLY SUPPORTED BY WALL, AND MATCHES JOIST DEPTH:
    Fc ⊥ (PERPENDICULAR)..... = 680 psi (MIN) Ft = 1075 psi (MIN),
    Fc // (PARALLEL)..... = 1400 psi (MIN) E = 1.3 x 10^6 psi (MIN)
    GLU-LAM BEAM SHALL BE:
    24F-V4, DF/DF : Fb = 2400/ 1850 psi @ BOTTOM/ TOP, Fv = 265 psi, E = 1.8 x 10^6 psi (MIN).
    24F-V8, DF/DF : Fb = 2400 psi @ BOTTOM & TOP, Fv = 265 psi, E = 1.8 x 10^6 psi (MIN).
13. A 4x6 (ALT. 2-2x6) HDR. SHOULD BE USED AT ALL OPENINGS IN EXTERIOR & INTERIOR BEARING WALLS U.N.O. ON PLANS. REFER TO THE FOLLOWING TABLE FOR OTHER COMMON HEADER SIZES.

PLAN DESIGNATION	HEADER SIZE	ALT. HEADER SIZE *
H1	4 x 6	2 - 2 x 6
H2	4 x 8	2 - 2 x 8

* 2-2 x SHALL BE PLACED ON END W/ 1/2" PLYWOOD SHIM BETWEEN. PROVIDE 16d NAILS @ 16" O.C., STAGG., BOTH SIDES.

14. THE FOLLOWING TRIMMER SCHEDULE SHOULD BE USED FOR HEADERS IN BEARING WALLS, U.N.O. ON THE PLAN. REQUIRED TRIMMER MUST BE APPLIED @ EACH END OF HEADER.

CLEAR SPAN, L		
L ≤ 6'-0"	6'-0" < L ≤ 10'-0"	L ≥ 10'-0"
2 x	2-2 x	SEE PLAN

15. FLOOR TO FLOOR HOLDOWN (H) APPLY DETAIL AT EACH END OF SHEAR WALL PER PLAN. (2) LOCATIONS PER WALL AS SHOWN BELOW. SEE TABLE FOR TYPE & DETAIL REFFERENCE. MIN. POST SIZE IS NOTED IN THE DETAIL

PER PLAN	REFERENCE & APPLY DETAIL	PER PLAN	REFERENCE & APPLY DETAIL	PER PLAN	REFERENCE & APPLY DETAIL
A	1A / SD-3	C*	1C* / SD-3	F	1F / SD-3
B	1B / SD-3	D	1D / SD-3	G	1G / SD-3
C	1C / SD-3	E	1E / SD-3	H	1H / SD-3

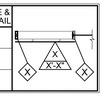

16. INTERIOR NON-BEARING & NON-SHEAR WALLS MAY BE FRAMED WITH 2x STUDS AT 24" O.C., MAX.
17. TOP PLATES AT ALL ROOF FRAMING LEVELS SHOULD BE SPLICED PER 9A/SD2 , U.N.O. ON PLANS.
18. CONTINUOUS 1 ½" LSL RIM JOISTS SHOULD BE USED AT ALL FLOOR FRAMING EDGES WHERE POSSIBLE. ALL RIM BREAKS SHOULD BE SPLICED WITH A SINGLE CS16 x 36" STRAP, PER 4A/SD2 U.NO. ON PLANS.
19. ATTACH WOOD FRAMING ELEMENT TO STEEL MEMBER WITH 1/2" Ø STUD BOLTS AT 24" O.C. STAGGERED U.N.O
20. REFER TO ARCHITECTURAL PLANS/DETAILS FOR BEAM/COLUMN FIRE RESISTANCE ASSEMBLIES.
21. TIGHT FIT SOLID COMPRESSION BLOCKING REQUIRED BETWEEN DRAG MEMBERS, FILLING GAP AT PARTY WALLS.

STUD AND TRIMMER SCHEDULE

24	2X4 STUD	226	2-2X6 STUD	24T	2X4 TRIMMER	226T	2-2X6 TRIMMER
26	2X6 STUD	324	3-2X4 STUD	26T	2X6 TRIMMER	324T	3-2X4 TRIMMER
224	2-2X4 STUD	326	3-2X6 STUD	224T	2-2X4 TRIMMER	326T	3-2X6 TRIMMER

POST AND TRIMMER SCHEDULE

44	4X4 POST	412	4X12 POST	44T	4X4 TRIMMER	66T	6X6 TRIMMER
46	4X6 POST	66	6X6 POST	46T	4X6 TRIMMER	68T	6X8 TRIMMER
48	4X8 POST	68	6X8 POST	48T	4X8 TRIMMER	88T	8X8 TRIMMER
410	4X10 POST	88	8X8 POST				

BEAM SCHEDULE

414-1.55E	3 1/2"x14" 1.55E EWP FL BM
214-1.55E	1 3/4"x14" 1.55E EWP FL BM
414-2.0E	3 1/2"X14" 2.0E EWP FL BM
614-2.0E	5 1/4"X14" 2.0E EWP FL BM

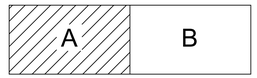

KEYPLAN

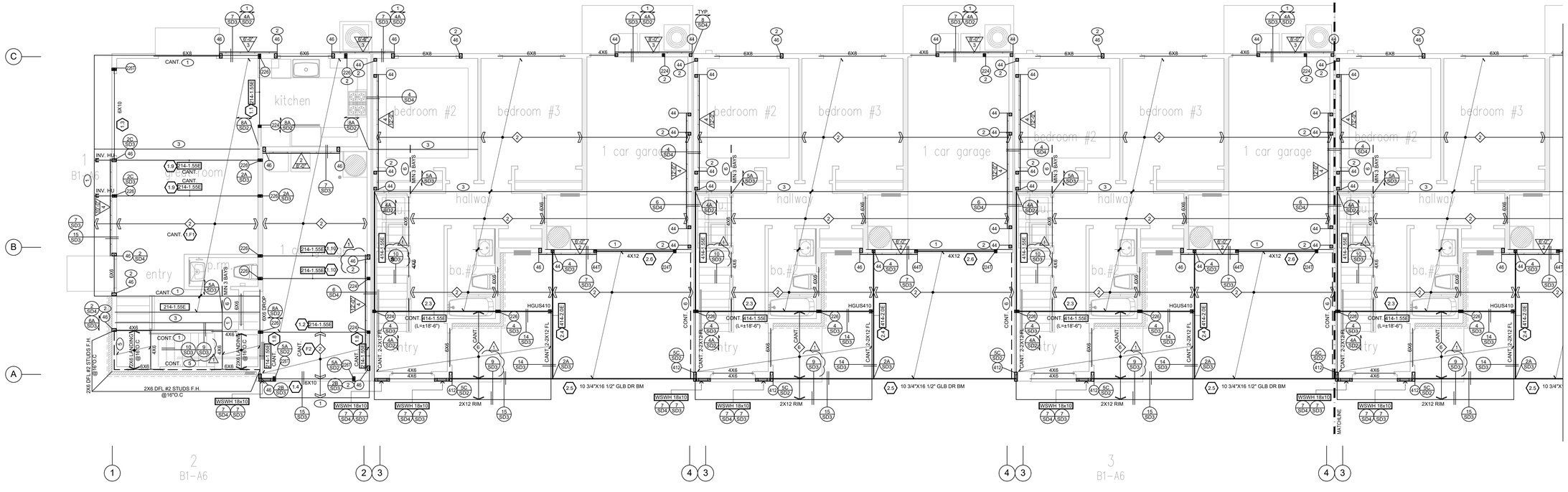

FLOOR FRAMING PLAN
BUILDING 1 - AREA A

SCALE : 3/16" = 1'-0"

ISSUED DATE: 5/5/2022

GOUVIS engineering
consulting group, inc.
15 Studebaker
Irvine
CA 92618

Irvine
tel 949.752.1612
fax 949.752.5321

Palm Springs
tel 760.323.5090

REGISTERED PROFESSIONAL ENGINEER — DIRAKORN COMAUL — No. S 5226 — Exp. 6/30/23 — STRUCTURAL — STATE OF CALIFORNIA

DATE SIGNED: 2/3/23

RESTRICTIVE NOTICE

THESE DESIGNS, DRAWINGS, AND SPECIFICATIONS ARE THE EXCLUSIVE PROPERTY OF GOUVIS ENGINEERING CONSULTING GROUP. THEY ARE THE SUBJECT OF COPYRIGHT AND OTHER LEGAL PROTECTION. THEY MAY BE USED ONLY BY THEIR INTENDED RECIPIENT AND ONLY FOR THE PROJECT DEPICTED HEREIN. NO PART OF THESE DRAWINGS ARE TO BE COPIED, TRANSFERRED, REPRODUCED, NOR CAN THEY BE USED, IN WHOLE OR IN PART, BY ANY OTHER PERSON OR FOR ANY OTHER PROJECT OR STRUCTURE, WITHOUT THE PRIOR EXPRESS WRITTEN CONSENT OF GOUVIS ENGINEERING CONSULTING GROUP

© 2017 GOUVIS ENGINEERING CONSULTING GROUP INC. - ALL RIGHTS RESERVED

PROJECT:
Tenant Square

DEVELOPER:
Osito Holdings LLC

ARCHITECT:

LOCATION:
Morgan Hill
Santa Clara
CA

REVISIONS

NO.	DATE	DESCRIPTION
1	02/02/23	BLDG DEPT.

SHEET NAME:
FLOOR FRAMING PLAN
BUILDING 1 - AREA A

PROJECT NUMBER:
66074

ENGINEER: GE
DRAFTER: GE

SHEET NUMBER:
S-1.2A

SYMBOLS LEGEND

- POST OR TRIMMER AS NOTED
- DIRECTION OF ROOF MEMBER PER SCHEDULE, REFER TO HATCHED WALLS ON PLANS FOR INTERMEDIATE BR'G
- DIRECTION OF FLOOR MEMBER PER SCHEDULE, REFER TO HATCHED WALLS ON PLANS FOR INTERMEDIATE BR'G
- DIRECTION OF DECK MEMBER PER SCHEDULE, REFER TO HATCHED WALLS ON PLANS FOR INTERMEDIATE BR'G
- SHEAR PANEL LENGTH AND NUMBER. REFER TO SN-1 FOR PANEL TYPE
- DETAIL NUMBER / DETAIL SHEET NUMBER
- BEAM NUMBER, REFER TO GOUVIS ENGINEERING CALCULATIONS
- XXX - X.XE: MINIMUM MODULUS OF ELASTICITY (E) / BEAM SIZE, SEE BEAM SCHEDULE
- KEY NOTE NUMBER
- BEARING WALL
- CALIFORNIA FRAMING

KEY NOTES

1. CONTINUOUS 1 1/4" WIDE MIN. LVL / TIMBERSTRAND OR SPLICE PER PLAN.
2. ALIGN POST(S) WITH UPPER FLOOR POST(S), SEE DETAIL 2-SN2
3. CONTINUOUS JOIST W/ E.N.
4. DRAG STRUT W/E.N., SEE PLANS/DETAILS FOR LENGTH. SUPPORT END W/ BLK'G
5. LINE OF 2X FLAT BLOCKING W/ EDGE NAIL & CONTINUOUS CS16 STRAP OVER U.N.O. SEE PLAN FOR NUMBER OF BAYS.
6. CONTINUOUS FULL HT. BLKG. W/E.N. SEE PLANS FOR NUMBER OF BAYS (U.N.O.)
7. CONTINUOUS LINE OF BLOCKING W/ EDGE NAIL UNDER SHEAR WALL ABOVE W/ (1) CS16, U.N.O.
8. BLOCKED ROOF DIAPHRAGM W/ 8d's @ 4" O.C. B.N., 6" O.C. E.N. & 12" O.C. F.N.
9. BLOCKED FLOOR DIAPHRAGM W/ 10d's @ 4" O.C. B.N., 6" O.C. E.N. & 12" O.C. F.N.
10. SHEAR TRUSS W/E.N. TRUSS TO TRANSFER 180 PLF MIN. (U.N.O.)
11. TRUSS HANGER BY TRUSS SUPPLIER
12. (1) SIMPSON HTS20 FLUSH BEAM TO DROP BEAM (U.N.O.)
13. PROVIDE SOLID BLOCKING
14. DRAG TRUSS W/E.N. TRUSS TO TRANSFER 1700# FORCE MIN. (U.N.O.)
15. BLOCKED OPENING SEE DETAIL 15/SD2
16. CONTINUOUS SHEAR TRUSS W/ E.N OVER EACH PARTY WALL AT ROOF LEVEL DESIGN TRUSS TO TRANSFER 180 PLF MIN. LATERALLY.
17. COUNTERSINK AS REQUIRED NO OVER CUT.

FRAMING SCHEDULE

1. DESIGNED ROOF TRUSSES @ 24" O.C.
2. 14" TJI 210 I-JOISTS (OR EQUAL) @ 19.2" O.C.
3. 14" TJI 210 I-JOISTS (OR EQUAL) @ 16" O.C.
4. 14" TJI 230 I-JOISTS (OR EQUAL) @ 16" O.C.
5. 14" TJI 360 I-JOISTS (OR EQUAL) @ 12" O.C.
6. 2 x 12 DECK JOISTS @ 16" O.C.
7. 2 X 10 ROOF JOISTS / RAFTERS @ 16" O.C.
8. METAL RIBBED ALUMINUM ROOF BY OTHERS. ALT. 2 X 8 ROOF JOISTS @ 16" O.C.

MANUFACTURER		I LEVEL BY WEYERHAEUSER	LOUISIANA PACIFIC	BOISE CASCADE	ROSEBURG
ICC-ES REPORT		ESR-1153	ESR-1305	ESR-1336	ESR-1251
DEPTH	11 7/8"	TJI 210	LPI 36	BCI 6000-1.7	RFPI-400
		TJI 360	LPI 56	BCI 60-2.0	RFPI-70
		TJI 560	N/A	BCI 90-2.0	RFPI-90
	14" & 16"	TJI 210	LPI 530	BCI 6000-1.8	RFPI-400
		TJI 360	LPI 56	BCI 60-2.0	RFPI-70
		TJI 560	N/A	N/A	RFPI-90

FRAMING NOTES

1. REFER TO STRUCTURAL GENERAL NOTES AND DETAIL SHEETS (SN-1 & SN-2) FOR MORE INFORMATION.
2. REFER TO DETAIL 3/SN2 FOR TYPICAL CONNECTION AT ALL INTERIOR NON-BEARING WALLS AT ROOF LEVEL.
3. SHEAR WALLS CANNOT BE USED AS PLUMBING WALLS, UNLESS APPROVED BY GOUVIS ENGINEERING CONSULTING GROUP IN WRITING.
4. AT DOUBLE SIDED SHEAR WALLS, POST W/E.N. PER PLAN TO RECEIVE E.N. FROM BOTH SIDES.
5. WHEN MULTIPLE STUDS ARE USED INSTEAD OF A SINGLE POST, PLYWOOD SHEAR WALL TO BE NAILED TO ALL STUDS RECEIVING HOLDOWNS.
6. APPLY SHEAR PRIOR TO FRAMING OF PERPPENDICULAR WALLS. DO NOT BREAK SHEAR AT PERPENDICULAR WALL LOCATIONS UNLESS SPECIFICALLY DETAILED ON PLANS.

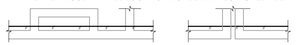

7. ALL VERTICAL PIPES THROUGH PLATES AND/OR SOLID RIM BEAMS MUST BE DRILLED CLEAN CUT W/ 1/16" TOLERANCE. DO NOT NOTCH OR CUT PLATES.
8. ALL BEAMS SHOWN ARE DROP (U.N.O.) ON PLANS.
9. AS AN ALTERNATE TO USING SIMPSON PRODUCTS OTHER CONNECTORS CAN BE USED, AS LONG AS THEIR CAPACITIES ARE EQUAL TO OR BETTER THAN SIMPSON'S, AND SUBJECTED TO THE APPROVAL OF GOUVIS ENGINERING.
10. USE SIMPSON " IUS/ITS/U310 " HANGERS FOR CONNECTION OF I-JOISTS TO OTHER FRAMING MEMBERS (U.N.O.) AND " LUS " HANGERS FOR CONNECTION OF SOLID JOISTS.
11. ALL WOOD I-JOISTS SHALL BE IN COMPLIANCE WITH THE PROVISIONS OF APA PRI-400, EWS-Z725B (PERFORMANCE RATED I-JOIST STANDARD) OR ASTM D5055. QUALIFIED PRI-400, MANUFACTURED. I-JOIST CAN BE ANY OF THOSE LISTED IN THE TABLE ABOVE.
12. ENGINEERING WOOD PRODUCTS (EWP) CAN BE FROM ANY MANUFACTURER WITH CURRENT APPROVED ICC ES - EVALUATION REPORT WITH THE FOLLOWING MECHANICAL PROPERTIES:
    Fb = 2800 psi (MIN), Fv = 285 psi (MIN), E = 2.2 x 10^6 psi (MIN).
    Fb = 2800 psi (MIN), Fv = 285 psi (MIN), E = 2.0 x 10^6 psi (MIN).
    Fb = 2325 psi (MIN), Fv = 285 psi (MIN), E = 1.55 x 10^6 psi (MIN).
    Fb = 1700 psi (MIN), Fv = 285 psi (MIN), E = 1.3 x 10^6 psi (MIN).
    FOR MANUFACTURED RIM BOARD WITH MIN 1 1/4" THICK, CONTINUOUSLY SUPPORTED BY WALL, AND MATCHES JOIST DEPTH:
    Fc ⊥ (PERPENDICULAR)..... = 680 psi (MIN) Ft = 1075 psi (MIN),
    Fc // (PARALLEL)..... = 1400 psi (MIN) E = 1.3 x 10^6 psi (MIN)
    GLU-LAM BEAM SHALL BE:
    24F-V4, DF/DF : Fb = 2400/ 1850 psi @ BOTTOM/ TOP, Fv = 265 psi, E = 1.8 x 10^6 psi (MIN).
    24F-V8, DF/DF : Fb = 2400 psi @ BOTTOM & TOP, Fv = 265 psi, E = 1.8 x 10^6 psi (MIN).
13. A 4x6 (ALT. 2-2x6) HDR. SHOULD BE USED AT ALL OPENINGS IN EXTERIOR & INTERIOR BEARING WALLS U.N.O. ON PLANS. REFER TO THE FOLLOWING TABLE FOR OTHER COMMON HEADER SIZES.

PLAN DESIGNATION	HEADER SIZE	ALT. HEADER SIZE *
H1	4 x 6	2 - 2 x 6
H2	4 x 8	2 - 2 x 8

* 2-2 x SHALL BE PLACED ON END W/ 1/2" PLYWOOD SHIM BETWEEN. PROVIDE 16d NAILS @ 16" O.C., STAGG., BOTH SIDES.

14. THE FOLLOWING TRIMMER SCHEDULE SHOULD BE USED FOR HEADERS IN BEARING WALLS, U.N.O. ON THE PLAN. REQUIRED TRIMMER MUST BE APPLIED @ EACH END OF HEADER.

CLEAR SPAN, L		
L ≤ 6'-0"	6'-0" < L ≤ 10'-0"	L ≥ 10'-0"
2 x	2-2 x	SEE PLAN

15. FLOOR TO FLOOR HOLDOWN (H) APPLY DETAIL AT EACH END OF SHEAR WALL PER PLAN. (2) LOCATIONS PER WALL AS SHOWN BELOW. SEE TABLE FOR TYPE & DETAIL REFFERENCE. MIN. POST SIZE IS NOTED IN THE DETAIL

PER PLAN	REFERENCE & APPLY DETAIL	PER PLAN	REFERENCE & APPLY DETAIL	PER PLAN	REFERENCE & APPLY DETAIL
A	1A / SD-3	C*	1C* / SD-3	F	1F / SD-3
B	1B / SD-3	D	1D / SD-3	G	1G / SD-3
C	1C / SD-3	E	1E / SD-3	H	1H / SD-3

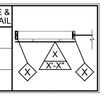

16. INTERIOR NON-BEARING & NON-SHEAR WALLS MAY BE FRAMED WITH 2x STUDS AT 24" O.C., MAX.
17. TOP PLATES AT ALL ROOF FRAMING LEVELS SHOULD BE SPLICED PER 9A/SD2, U.N.O. ON PLANS.
18. CONTINUOUS 1 ¼" LSL RIM JOISTS SHOULD BE USED AT ALL FLOOR FRAMING EDGES WHERE POSSIBLE. ALL RIM BREAKS SHOULD BE SPLICED WITH A SINGLE CS16 x 36" STRAP, PER 4A/SD2 U.NO. ON PLANS.
19. ATTACH WOOD FRAMING ELEMENT TO STEEL MEMBER WITH 1/2" Ø STUD BOLTS AT 24" O.C. STAGGERED U.N.O
20. REFER TO ARCHITECTURAL PLANS/DETAILS FOR BEAM/COLUMN FIRE RESISTANCE ASSEMBLIES.
21. TIGHT FIT SOLID COMPRESSION BLOCKING REQUIRED BETWEEN DRAG MEMBERS, FILLING GAP AT PARTY WALLS.

STUD AND TRIMMER SCHEDULE

24	2X4 STUD	226	2-2X6 STUD	24T	2X4 TRIMMER	226T	2-2X6 TRIMMER
26	2X6 STUD	324	3-2X4 STUD	26T	2X6 TRIMMER	324T	3-2X4 TRIMMER
224	2-2X4 STUD	326	3-2X6 STUD	224T	2-2X4 TRIMMER	326T	3-2X6 TRIMMER

POST AND TRIMMER SCHEDULE

44	4X4 POST	412	4X12 POST	44T	4X4 TRIMMER	66T	6X6 TRIMMER
46	4X6 POST	66	6X6 POST	46T	4X6 TRIMMER	68T	6X8 TRIMMER
48	4X8 POST	68	6X8 POST	48T	4X8 TRIMMER	88T	8X8 TRIMMER
410	4X10 POST	88	8X8 POST				

BEAM SCHEDULE

414-1.55E	3 1/2"x14" 1.55E EWP FL BM
214-1.55E	1 3/4"x14" 1.55E EWP FL BM
414-2.0E	3 1/2"X14" 2.0E EWP FL BM
614-2.0E	5 1/4"X14" 2.0E EWP FL BM

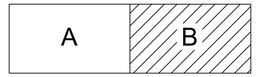

KEYPLAN

HATCHED UNIT INDICATES
A "BELOW MARKET RATE" UNIT

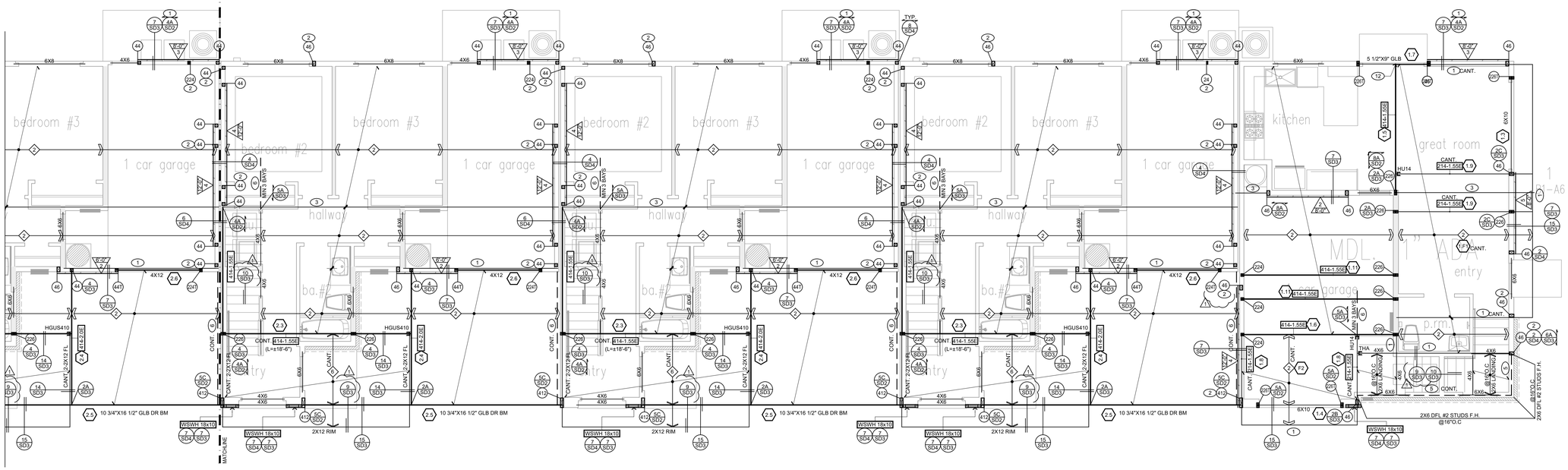

FLOOR FRAMING PLAN
BUILDING 1 - AREA B

SCALE : 3/16" = 1'-0"

ISSUED DATE: 5/6/2022

GOUVIS engineering
consulting group, inc.
15 Studebaker
Irvine
CA 92618

Irvine
tel 949.752.1612
fax 949.752.5321

Palm Springs
tel 760.323.5090

REGISTERED PROFESSIONAL ENGINEER
DIBAKAR GOSWAMI
No. S 5226
Exp. 6/30/23
STRUCTURAL
STATE OF CALIFORNIA

DATE SIGNED: 2/3/23

RESTRICTIVE NOTICE

THESE DESIGNS, DRAWINGS, AND SPECIFICATIONS ARE THE EXCLUSIVE PROPERTY OF GOUVIS ENGINEERING CONSULTING GROUP. THEY ARE THE SUBJECT OF COPYRIGHT AND OTHER LEGAL PROTECTION. THEY MAY BE USED ONLY BY THEIR INTENDED RECIPIENT AND ONLY FOR THE PROJECT DEPICTED HEREIN. NO PART OF THESE DRAWINGS ARE TO BE COPIED, TRANSFERRED, REPRODUCED, NOR CAN THEY BE USED, IN WHOLE OR IN PART, BY ANY OTHER PERSON OR FOR ANY OTHER PROJECT OR STRUCTURE, WITHOUT THE PRIOR EXPRESS WRITTEN CONSENT OF GOUVIS ENGINEERING CONSULTING GROUP

© 2017 GOUVIS ENGINEERING CONSULTING GROUP INC. - ALL RIGHTS RESERVED

PROJECT:
Tenant Square

DEVELOPER:
Osito Holdings LLC

ARCHITECT:

LOCATION:
Morgan Hill
Santa Clara
CA

REVISIONS

NO.	DATE	DESCRIPTION
1	02/02/23	BLDG DEPT.

SHEET NAME:
FLOOR FRAMING PLAN
BUILDING 1 - AREA B

PROJECT NUMBER:
66074

ENGINEER: GE
DRAFTER: GE

SHEET NUMBER:
S-1.2B

SYMBOLS LEGEND

- POST OR TRIMMER AS NOTED
- DIRECTION OF ROOF MEMBER PER SCHEDULE, REFER TO HATCHED WALLS ON PLANS FOR INTERMEDIATE BR'G
- DIRECTION OF FLOOR MEMBER PER SCHEDULE, REFER TO HATCHED WALLS ON PLANS FOR INTERMEDIATE BR'G
- DIRECTION OF DECK MEMBER PER SCHEDULE, REFER TO HATCHED WALLS ON PLANS FOR INTERMEDIATE BR'G
- SHEAR PANEL LENGTH AND NUMBER. REFER TO SN-1 FOR PANEL TYPE
- DETAIL NUMBER / DETAIL SHEET NUMBER
- BEAM NUMBER, REFER TO GOUVIS ENGINEERING CALCULATIONS
- MINIMUM MODULUS OF ELASTICITY (E) / BEAM SIZE, SEE BEAM SCHEDULE
- KEY NOTE NUMBER
- BEARING WALL
- CALIFORNIA FRAMING

KEY NOTES

1. CONTINUOUS 1 1/4" WIDE MIN. LVL / TIMBERSTRAND OR SPLICE PER PLAN.
2. ALIGN POST(S) WITH UPPER FLOOR POST(S), SEE DETAIL 2-SN2
3. CONTINUOUS JOIST W/ E.N.
4. DRAG STRUT W/E.N., SEE PLANS/DETAILS FOR LENGTH. SUPPORT END W/ BLK'G
5. LINE OF 2X FLAT BLOCKING W/ EDGE NAIL & CONTINUOUS CS16 STRAP OVER U.N.O. SEE PLAN FOR NUMBER OF BAYS.
6. CONTINUOUS FULL HT. BLKG. W/E.N. SEE PLANS FOR NUMBER OF BAYS (U.N.O.)
7. CONTINUOUS LINE OF BLOCKING W/ EDGE NAIL UNDER SHEAR WALL ABOVE W/ (1) CS16, U.N.O.
8. BLOCKED ROOF DIAPHRAGM W/ 8d's @ 4" O.C. B.N., 6" O.C. E.N. & 12" O.C. F.N.
9. BLOCKED FLOOR DIAPHRAGM W/ 10d's @ 4" O.C. B.N., 6" O.C. E.N. & 12" O.C. F.N.
10. SHEAR TRUSS W/E.N. TRUSS TO TRANSFER 180 PLF MIN. (U.N.O.)
11. TRUSS HANGER BY TRUSS SUPPLIER
12. (1) SIMPSON HTS20 FLUSH BEAM TO DROP BEAM (U.N.O.)
13. PROVIDE SOLID BLOCKING
14. DRAG TRUSS W/E.N. TRUSS TO TRANSFER 1700# FORCE MIN. (U.N.O.)
15. BLOCKED OPENING SEE DETAIL 15/SD2
16. CONTINUOUS SHEAR TRUSS W/ E.N OVER EACH PARTY WALL AT ROOF LEVEL DESIGN TRUSS TO TRANSFER 180 PLF MIN. LATERALLY.
17. COUNTERSINK AS REQUIRED NO OVER CUT.

FRAMING SCHEDULE

1. DESIGNED ROOF TRUSSES @ 24" O.C.
2. 14" TJI 210 I-JOISTS (OR EQUAL) @ 19.2" O.C.
3. 14" TJI 210 I-JOISTS (OR EQUAL) @ 16" O.C.
4. 14" TJI 230 I-JOISTS (OR EQUAL) @ 16" O.C.
5. 14" TJI 360 I-JOISTS (OR EQUAL) @ 12" O.C.
6. 2 x 12 DECK JOISTS @ 16" O.C.
7. 2 X 10 ROOF JOISTS / RAFTERS @ 16" O.C.
8. METAL RIBBED ALUMINUM ROOF BY OTHERS. ALT. 2 X 8 ROOF JOISTS @ 16" O.C.

MANUFACTURER		I LEVEL BY WEYERHAEUSER	LOUISIANA PACIFIC	BOISE CASCADE	ROSEBURG
ICC-ES REPORT		ESR-1153	ESR-1305	ESR-1336	ESR-1251
DEPTH	11 7/8"	TJI 210	LPI 36	BCI 6000-1.7	RFPI-400
		TJI 360	LPI 56	BCI 60-2.0	RFPI-70
		TJI 560	N/A	BCI 90-2.0	RFPI-90
	14" & 16"	TJI 210	LPI 530	BCI 6000-1.8	RFPI-400
		TJI 360	LPI 56	BCI 60-2.0	RFPI-70
		TJI 560	N/A	N/A	RFPI-90

FRAMING NOTES

1. REFER TO STRUCTURAL GENERAL NOTES AND DETAIL SHEETS (SN-1 & SN-2) FOR MORE INFORMATION.
2. REFER TO DETAIL 3/SN2 FOR TYPICAL CONNECTION AT ALL INTERIOR NON-BEARING WALLS AT ROOF LEVEL.
3. SHEAR WALLS CANNOT BE USED AS PLUMBING WALLS, UNLESS APPROVED BY GOUVIS ENGINEERING CONSULTING GROUP IN WRITING.
4. AT DOUBLE SIDED SHEAR WALLS, POST W/E.N. PER PLAN TO RECEIVE E.N. FROM BOTH SIDES.
5. WHEN MULTIPLE STUDS ARE USED INSTEAD OF A SINGLE POST, PLYWOOD SHEAR WALL TO BE NAILED TO ALL STUDS RECEIVING HOLDOWNS.
6. APPLY SHEAR PRIOR TO FRAMING OF PERPPENDICULAR WALLS. DO NOT BREAK SHEAR AT PERPENDICULAR WALL LOCATIONS UNLESS SPECIFICALLY DETAILED ON PLANS.

7. ALL VERTICAL PIPES THROUGH PLATES AND/OR SOLID RIM BEAMS MUST BE DRILLED CLEAN CUT W/ 1/16" TOLERANCE. DO NOT NOTCH OR CUT PLATES.
8. ALL BEAMS SHOWN ARE DROP (U.N.O.) ON PLANS.
9. AS AN ALTERNATE TO USING SIMPSON PRODUCTS OTHER CONNECTORS CAN BE USED, AS LONG AS THEIR CAPACITIES ARE EQUAL TO OR BETTER THAN SIMPSON'S, AND SUBJECTED TO THE APPROVAL OF GOUVIS ENGINERING.
10. USE SIMPSON " IUS/ITS/U310 " HANGERS FOR CONNECTION OF I-JOISTS TO OTHER FRAMING MEMBERS (U.N.O.) AND " LUS " HANGERS FOR CONNECTION OF SOLID JOISTS.
11. ALL WOOD I-JOISTS SHALL BE IN COMPLIANCE WITH THE PROVISIONS OF APA PRI-400, EWS-Z725B (PERFORMANCE RATED I-JOIST STANDARD) OR ASTM D5055. QUALIFIED PRI-400, MANUFACTURED. I-JOIST CAN BE ANY OF THOSE LISTED IN THE TABLE ABOVE.
12. ENGINEERING WOOD PRODUCTS (EWP) CAN BE FROM ANY MANUFACTURER WITH CURRENT APPROVED ICC ES - EVALUATION REPORT WITH THE FOLLOWING MECHANICAL PROPERTIES:
    Fb = 2800 psi (MIN), Fv = 285 psi (MIN), E = 2.2 x 10^6 psi (MIN).
    Fb = 2800 psi (MIN), Fv = 285 psi (MIN), E = 2.0 x 10^6 psi (MIN).
    Fb = 2325 psi (MIN), Fv = 285 psi (MIN), E = 1.55 x 10^6 psi (MIN).
    Fb = 1700 psi (MIN), Fv = 285 psi (MIN), E = 1.3 x 10^6 psi (MIN).
    FOR MANUFACTURED RIM BOARD WITH MIN 1 1/4" THICK, CONTINUOUSLY SUPPORTED BY WALL AND MATCHES JOIST DEPTH:
    Fc ⊥ (PERPENDICULAR)..... = 680 psi (MIN) Ft = 1075 psi (MIN),
    Fc // (PARALLEL)..... = 1400 psi (MIN) E = 1.3 x 10^6 psi (MIN)
    GLU-LAM BEAM SHALL BE:
    24F-V4, DF/DF : Fb = 2400/ 1850 psi @ BOTTOM/ TOP, Fv = 265 psi, E = 1.8 x 10^6 psi (MIN).
    24F-V8, DF/DF : Fb = 2400 psi @ BOTTOM & TOP, Fv = 265 psi, E = 1.8 x 10^6 psi (MIN).
13. A 4x6 (ALT. 2-2x6) HDR. SHOULD BE USED AT ALL OPENINGS IN EXTERIOR & INTERIOR BEARING WALLS U.N.O. ON PLANS. REFER TO THE FOLLOWING TABLE FOR OTHER COMMON HEADER SIZES.

PLAN DESIGNATION	HEADER SIZE	ALT. HEADER SIZE *
H1	4 x 6	2 - 2 x 6
H2	4 x 8	2 - 2 x 8

* 2-2 x SHALL BE PLACED ON END W/ 1/2" PLYWOOD SHIM BETWEEN. PROVIDE 16d NAILS @ 16" O.C., STAGG., BOTH SIDES.

14. THE FOLLOWING TRIMMER SCHEDULE SHOULD BE USED FOR HEADERS IN BEARING WALLS, U.N.O. ON THE PLAN. REQUIRED TRIMMER MUST BE APPLIED @ EACH END OF HEADER.

CLEAR SPAN, L		
L ≤ 6'-0"	6'-0" < L ≤ 10'-0"	L ≥ 10'-0"
2 x	2-2 x	SEE PLAN

15. FLOOR TO FLOOR HOLDOWN (H) APPLY DETAIL AT EACH END OF SHEAR WALL PER PLAN. (2) LOCATIONS PER WALL AS SHOWN BELOW. SEE TABLE FOR TYPE & DETAIL REFFERENCE. MIN. POST SIZE IS NOTED IN THE DETAIL

PER PLAN	REFERENCE & APPLY DETAIL	PER PLAN	REFERENCE & APPLY DETAIL	PER PLAN	REFERENCE & APPLY DETAIL
A	1A / SD-3	C*	1C* / SD-3	F	1F / SD-3
B	1B / SD-3	D	1D / SD-3	G	1G / SD-3
C	1C / SD-3	E	1E / SD-3	H	1H / SD-3

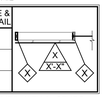

16. INTERIOR NON-BEARING & NON-SHEAR WALLS MAY BE FRAMED WITH 2x STUDS AT 24" O.C., MAX.
17. TOP PLATES AT ALL ROOF FRAMING LEVELS SHOULD BE SPLICED PER 9A/SD2, U.N.O. ON PLANS.
18. CONTINUOUS 1 ½" LSL RIM JOISTS SHOULD BE USED AT ALL FLOOR FRAMING EDGES WHERE POSSIBLE. ALL RIM BREAKS SHOULD BE SPLICED WITH A SINGLE CS16 x 36" STRAP, PER 4A/SD2 U.NO. ON PLANS.
19. ATTACH WOOD FRAMING ELEMENT TO STEEL MEMBER WITH 1/2" Ø STUD BOLTS AT 24" O.C. STAGGERED U.N.O
20. REFER TO ARCHITECTURAL PLANS/DETAILS FOR BEAM/COLUMN FIRE RESISTANCE ASSEMBLIES.
21. TIGHT FIT SOLID COMPRESSION BLOCKING REQUIRED BETWEEN DRAG MEMBERS, FILLING GAP AT PARTY WALLS.

STUD AND TRIMMER SCHEDULE

24	2X4 STUD	226	2-2X6 STUD	24T	2X4 TRIMMER	26T	2-2X6 TRIMMER
26	2X6 STUD	324	3-2X4 STUD	26T	2X6 TRIMMER	24T	3-2X4 TRIMMER
224	2-2X4 STUD	326	3-2X6 STUD	24T	2-2X4 TRIMMER	26T	3-2X6 TRIMMER

POST AND TRIMMER SCHEDULE

44	4X4 POST	412	4X12 POST	44T	4X4 TRIMMER	66T	6X6 TRIMMER
46	4X6 POST	66	6X6 POST	46T	4X6 TRIMMER	68T	6X8 TRIMMER
48	4X8 POST	68	6X8 POST	48T	4X8 TRIMMER	68T	8X8 TRIMMER
410	4X10 POST	88	8X8 POST				

BEAM SCHEDULE

414-1.55E	3 1/2"x14" 1.55E EWP FL BM
214-1.55E	1 3/4"x14" 1.55E EWP FL BM
414-2.0E	3 1/2"X14" 2.0E EWP FL BM
614-2.0E	5 1/4"X14" 2.0E EWP FL BM

HATCHED UNIT INDICATES A "BELOW MARKET RATE" UNIT

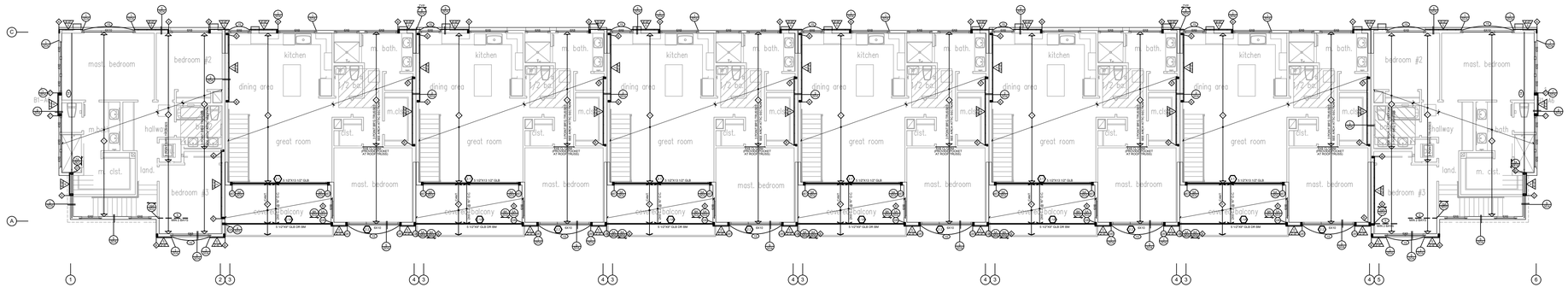

OVERALL ROOF FRAMING PLAN
BUILDING 1

SCALE : 3/32" = 1'-0"

ISSUED DATE: 5/5/2022

GOUVIS engineering
consulting group, inc.
15 Studebaker
Irvine
CA 92618

Irvine
tel 949.752.1612
fax 949.752.5321

Palm Springs
tel 760.323.5090

REGISTERED PROFESSIONAL ENGINEER
DIRAKORN COMAUL
No. S 5226
Exp. 6/30/23
STRUCTURAL
STATE OF CALIFORNIA

DATE SIGNED: 2/3/23

RESTRICTIVE NOTICE

THESE DESIGNS, DRAWINGS, AND SPECIFICATIONS ARE THE EXCLUSIVE PROPERTY OF GOUVIS ENGINEERING CONSULTING GROUP. THEY ARE THE SUBJECT OF COPYRIGHT AND OTHER LEGAL PROTECTION. THEY MAY BE USED ONLY BY THEIR INTENDED RECIPIENT AND ONLY FOR THE PROJECT DEPICTED HEREIN. NO PART OF THESE DRAWINGS ARE TO BE COPIED, TRANSFERRED, REPRODUCED, NOR CAN THEY BE USED, IN WHOLE OR IN PART, BY ANY OTHER PERSON OR FOR ANY OTHER PROJECT OR STRUCTURE, WITHOUT THE PRIOR EXPRESS WRITTEN CONSENT OF GOUVIS ENGINEERING CONSULTING GROUP

© 2017 GOUVIS ENGINEERING CONSULTING GROUP INC. - ALL RIGHTS RESERVED

PROJECT:
Tenant Square

DEVELOPER:
Osito Holdings LLC

ARCHITECT:

LOCATION:
Morgan Hill
Santa Clara
CA

REVISIONS

NO.	DATE	DESCRIPTION
1	02/02/23	BLDG DEPT.

SHEET NAME:
OVERALL ROOF FRAMING PLAN BUILDING 1

PROJECT NUMBER:
66074

ENGINEER: GE
DRAFTER: GE

SHEET NUMBER:
S-1.3

SYMBOLS LEGEND

- POST OR TRIMMER AS NOTED
- DIRECTION OF ROOF MEMBER PER SCHEDULE, REFER TO HATCHED WALLS ON PLANS FOR INTERMEDIATE BR'G
- DIRECTION OF FLOOR MEMBER PER SCHEDULE, REFER TO HATCHED WALLS ON PLANS FOR INTERMEDIATE BR'G
- DIRECTION OF DECK MEMBER PER SCHEDULE, REFER TO HATCHED WALLS ON PLANS FOR INTERMEDIATE BR'G
- SHEAR PANEL LENGTH AND NUMBER. REFER TO SN-1 FOR PANEL TYPE
- DETAIL NUMBER / DETAIL SHEET NUMBER
- BEAM NUMBER, REFER TO GOUVIS ENGINEERING CALCULATIONS
- XXX - X.XE: MINIMUM MODULUS OF ELASTICITY (E) / BEAM SIZE, SEE BEAM SCHEDULE
- KEY NOTE NUMBER
- BEARING WALL
- CALIFORNIA FRAMING

KEY NOTES

1. CONTINUOUS 1 1/4" WIDE MIN. LVL / TIMBERSTRAND OR SPLICE PER PLAN.
2. ALIGN POST(S) WITH UPPER FLOOR POST(S), SEE DETAIL 2-SN2
3. CONTINUOUS JOIST W/ E.N.
4. DRAG STRUT W/E.N., SEE PLANS/DETAILS FOR LENGTH. SUPPORT END W/ BLK'G
5. LINE OF 2X FLAT BLOCKING W/ EDGE NAIL & CONTINUOUS CS16 STRAP OVER U.N.O. SEE PLAN FOR NUMBER OF BAYS.
6. CONTINUOUS FULL HT. BLKG. W/E.N. SEE PLANS FOR NUMBER OF BAYS (U.N.O.)
7. CONTINUOUS LINE OF BLOCKING W/ EDGE NAIL UNDER SHEAR WALL ABOVE W/ (1) CS16, U.N.O.
8. BLOCKED ROOF DIAPHRAGM W/ 8d's @ 4" O.C. B.N., 6" O.C. E.N. & 12" O.C. F.N.
9. BLOCKED FLOOR DIAPHRAGM W/ 10d's @ 4" O.C. B.N., 6" O.C. E.N. & 12" O.C. F.N.
10. SHEAR TRUSS W/E.N. TRUSS TO TRANSFER 180 PLF MIN. (U.N.O.)
11. TRUSS HANGER BY TRUSS SUPPLIER
12. (1) SIMPSON HTS20 FLUSH BEAM TO DROP BEAM (U.N.O.)
13. PROVIDE SOLID BLOCKING
14. DRAG TRUSS W/E.N. TRUSS TO TRANSFER 1700# FORCE MIN. (U.N.O.)
15. BLOCKED OPENING SEE DETAIL 15/SD2
16. CONTINUOUS SHEAR TRUSS W/ E.N OVER EACH PARTY WALL AT ROOF LEVEL DESIGN TRUSS TO TRANSFER 180 PLF MIN. LATERALLY.
17. COUNTERSINK AS REQUIRED NO OVER CUT.

FRAMING SCHEDULE

1. DESIGNED ROOF TRUSSES @ 24" O.C.
2. 14" TJI 210 I-JOISTS (OR EQUAL) @ 19.2" O.C.
3. 14" TJI 210 I-JOISTS (OR EQUAL) @ 16" O.C.
4. 14" TJI 230 I-JOISTS (OR EQUAL) @ 16" O.C.
5. 14" TJI 360 I-JOISTS (OR EQUAL) @ 12" O.C.
6. 2 x 12 DECK JOISTS @ 16" O.C.
7. 2 X 10 ROOF JOISTS / RAFTERS @ 16" O.C.
8. METAL RIBBED ALUMINUM ROOF BY OTHERS. ALT. 2 X 8 ROOF JOISTS @ 16" O.C.

MANUFACTURER		I LEVEL BY WEYERHAEUSER	LOUISIANA PACIFIC	BOISE CASCADE	ROSEBURG
ICC-ES REPORT		ESR-1153	ESR-1305	ESR-1336	ESR-1251
DEPTH	11 7/8"	TJI 210	LPI 36	BCI 6000-1.7	RFPI-400
		TJI 360	LPI 56	BCI 60-2.0	RFPI-70
		TJI 560	N/A	BCI 90-2.0	RFPI-90
	14" & 16"	TJI 210	LPI 530	BCI 6000-1.8	RFPI-400
		TJI 360	LPI 56	BCI 60-2.0	RFPI-70
		TJI 560	N/A	N/A	RFPI-90

FRAMING NOTES

1. REFER TO STRUCTURAL GENERAL NOTES AND DETAIL SHEETS (SN-1 & SN-2) FOR MORE INFORMATION.
2. REFER TO DETAIL 3/SN2 FOR TYPICAL CONNECTION AT ALL INTERIOR NON-BEARING WALLS AT ROOF LEVEL.
3. SHEAR WALLS CANNOT BE USED AS PLUMBING WALLS, UNLESS APPROVED BY GOUVIS ENGINEEERING CONSULTING GROUP IN WRITING.
4. AT DOUBLE SIDED SHEAR WALLS, POST W/E.N. PER PLAN TO RECEIVE E.N. FROM BOTH SIDES.
5. WHEN MULTIPLE STUDS ARE USED INSTEAD OF A SINGLE POST, PLYWOOD SHEAR WALL TO BE NAILED TO ALL STUDS RECEIVING HOLDOWNS.
6. APPLY SHEAR PRIOR TO FRAMING OF PERPPENDICULAR WALLS. DO NOT BREAK SHEAR AT PERPENDICULAR WALL LOCATIONS UNLESS SPECIFICALLY DETAILED ON PLANS.

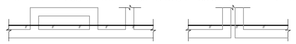

7. ALL VERTICAL PIPES THROUGH PLATES AND/OR SOLID RIM BEAMS MUST BE DRILLED CLEAN CUT W/ 1/16" TOLERANCE. DO NOT NOTCH OR CUT PLATES.
8. ALL BEAMS SHOWN ARE DROP (U.N.O.) ON PLANS.
9. AS AN ALTERNATE TO USING SIMPSON PRODUCTS OTHER CONNECTORS CAN BE USED, AS LONG AS THEIR CAPACITIES ARE EQUAL TO OR BETTER THAN SIMPSON'S, AND SUBJECTED TO THE APPROVAL OF GOUVIS ENGINERING.
10. USE SIMPSON " IUS/ITS/U310 " HANGERS FOR CONNECTION OF I-JOISTS TO OTHER FRAMING MEMBERS (U.N.O.) AND " LUS " HANGERS FOR CONNECTION OF SOLID JOISTS.
11. ALL WOOD I-JOISTS SHALL BE IN COMPLIANCE WITH THE PROVISIONS OF APA PRI-400, EWS-Z725B (PERFORMANCE RATED I-JOIST STANDARD) OR ASTM D5055. QUALIFIED PRI-400, MANUFACTURED. I-JOIST CAN BE ANY OF THOSE LISTED IN THE TABLE ABOVE.
12. ENGINEERING WOOD PRODUCTS (EWP) CAN BE FROM ANY MANUFACTURER WITH CURRENT APPROVED ICC ES - EVALUATION REPORT WITH THE FOLLOWING MECHANICAL PROPERTIES:
    Fb = 2800 psi (MIN), Fv = 285 psi (MIN), E = 2.2 x 10^6 psi (MIN).
    Fb = 2800 psi (MIN), Fv = 285 psi (MIN), E = 2.0 x 10^6 psi (MIN).
    Fb = 2325 psi (MIN), Fv = 285 psi (MIN), E = 1.55 x 10^6 psi (MIN).
    Fb = 1700 psi (MIN), Fv = 285 psi (MIN), E = 1.3 x 10^6 psi (MIN).
    FOR MANUFACTURED RIM BOARD WITH MIN 1 1/4" THICK, CONTINUOUSLY SUPPORTED BY WALL AND MATCHES JOIST DEPTH:
    Fc ⊥ (PERPENDICULAR)..... = 680 psi (MIN) Ft = 1075 psi (MIN),
    Fc // (PARALLEL)..... = 1400 psi (MIN) E = 1.3 x 10^6 psi (MIN)
    GLU-LAM BEAM SHALL BE:
    24F-V4, DF/DF : Fb = 2400/ 1850 psi @ BOTTOM/ TOP, Fv = 265 psi, E = 1.8 x 10^6 psi (MIN).
    24F-V8, DF/DF : Fb = 2400 psi @ BOTTOM & TOP, Fv = 265 psi, E = 1.8 x 10^6 psi (MIN).
13. A 4x6 (ALT. 2-2x6) HDR. SHOULD BE USED AT ALL OPENINGS IN EXTERIOR & INTERIOR BEARING WALLS U.N.O. ON PLANS. REFER TO THE FOLLOWING TABLE FOR OTHER COMMON HEADER SIZES.

PLAN DESIGNATION	HEADER SIZE	ALT. HEADER SIZE *
H1	4 x 6	2 - 2 x 6
H2	4 x 8	2 - 2 x 8

* 2-2 x SHALL BE PLACED ON END W/ 1/2" PLYWOOD SHIM BETWEEN. PROVIDE 16d NAILS @ 16" O.C., STAGG., BOTH SIDES.

14. THE FOLLOWING TRIMMER SCHEDULE SHOULD BE USED FOR HEADERS IN BEARING WALLS, U.N.O. ON THE PLAN. REQUIRED TRIMMER MUST BE APPLIED @ EACH END OF HEADER.

CLEAR SPAN, L		
L ≤ 6'-0"	6'-0" < L ≤ 10'-0"	L ≥ 10'-0"
2 x	2-2 x	SEE PLAN

15. FLOOR TO FLOOR HOLDOWN (H) APPLY DETAIL AT EACH END OF SHEAR WALL PER PLAN. (2) LOCATIONS PER WALL AS SHOWN BELOW. SEE TABLE FOR TYPE & DETAIL REFFERENCE. MIN. POST SIZE IS NOTED IN THE DETAIL

PER PLAN	REFERENCE & APPLY DETAIL	PER PLAN	REFERENCE & APPLY DETAIL	PER PLAN	REFERENCE & APPLY DETAIL
A	1A / SD-3	C*	1C* / SD-3	F	1F / SD-3
B	1B / SD-3	D	1D / SD-3	G	1G / SD-3
C	1C / SD-3	E	1E / SD-3	H	1H / SD-3

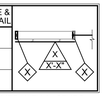

16. INTERIOR NON-BEARING & NON-SHEAR WALLS MAY BE FRAMED WITH 2x STUDS AT 24" O.C., MAX.
17. TOP PLATES AT ALL ROOF FRAMING LEVELS SHOULD BE SPLICED PER 9A/SD2, U.N.O. ON PLANS.
18. CONTINUOUS 1 ½" LSL RIM JOISTS SHOULD BE USED AT ALL FLOOR FRAMING EDGES WHERE POSSIBLE. ALL RIM BREAKS SHOULD BE SPLICED WITH A SINGLE CS16 x 36" STRAP, PER 4A/SD2 U.NO. ON PLANS.
19. ATTACH WOOD FRAMING ELEMENT TO STEEL MEMBER WITH 1/2" Ø STUD BOLTS AT 24" O.C. STAGGERED U.N.O
20. REFER TO ARCHITECTURAL PLANS/DETAILS FOR BEAM/COLUMN FIRE RESISTANCE ASSEMBLIES.
21. TIGHT FIT SOLID COMPRESSION BLOCKING REQUIRED BETWEEN DRAG MEMBERS, FILLING GAP AT PARTY WALLS.

STUD AND TRIMMER SCHEDULE

24	2X4 STUD	226	2-2X6 STUD	24T	2X4 TRIMMER	226T	2-2X6 TRIMMER
26	2X6 STUD	324	3-2X4 STUD	26T	2X6 TRIMMER	324T	3-2X4 TRIMMER
224	2-2X4 STUD	326	3-2X6 STUD	224T	2-2X4 TRIMMER	326T	3-2X6 TRIMMER

POST AND TRIMMER SCHEDULE

44	4X4 POST	412	4X12 POST	44T	4X4 TRIMMER	66T	6X6 TRIMMER
46	4X6 POST	66	6X6 POST	46T	4X6 TRIMMER	68T	6X8 TRIMMER
48	4X8 POST	68	6X8 POST	48T	4X8 TRIMMER	88T	8X8 TRIMMER
410	4X10 POST	88	8X8 POST				

BEAM SCHEDULE

414-1.55E	3 1/2"x14" 1.55E EWP FL BM
214-1.55E	1 3/4"x14" 1.55E EWP FL BM
414-2.0E	3 1/2"X14" 2.0E EWP FL BM
614-2.0E	5 1/4"X14" 2.0E EWP FL BM

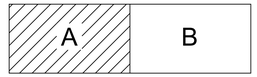

KEYPLAN

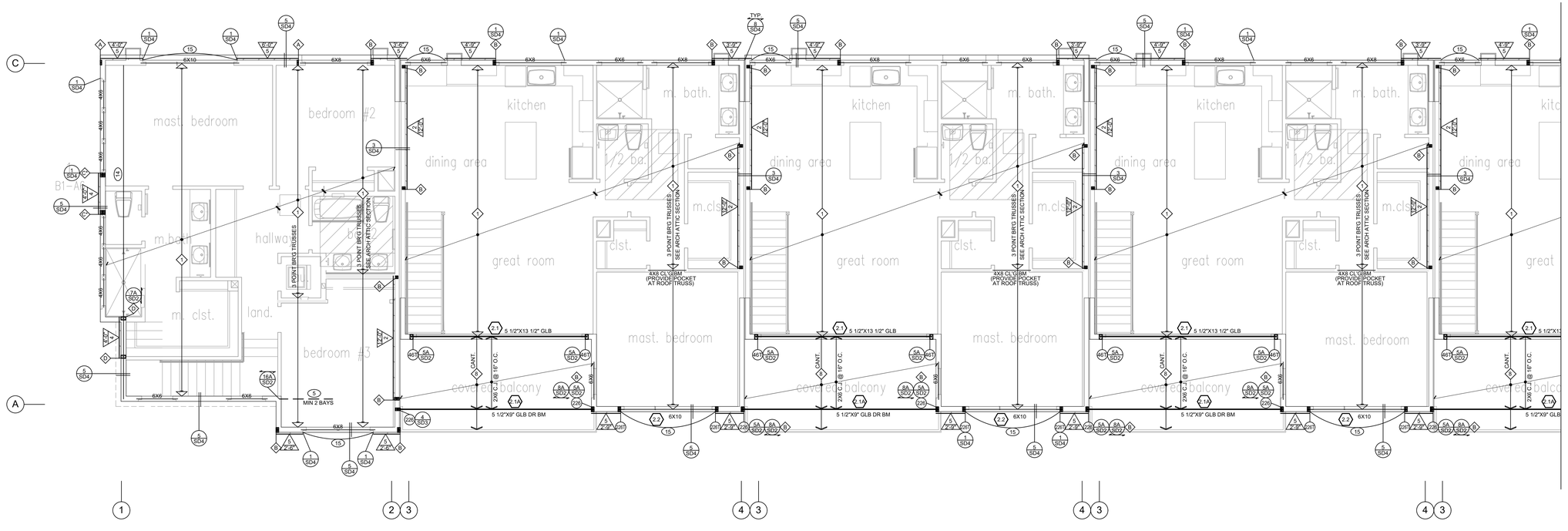

ROOF FRAMING PLAN
BUILDING 1 - AREA A

SCALE : 3/16" = 1'-0"

ISSUED DATE: 5/5/2022

GOUVIS engineering
consulting group, inc.
15 Studebaker
Irvine
CA 92618

Irvine
tel 949.752.1612
fax 949.752.5321

Palm Springs
tel 760.323.5090

REGISTERED PROFESSIONAL ENGINEER DIRAKORN COSAVUL No. S 5226 Exp. 6/30/23 STRUCTURAL STATE OF CALIFORNIA

DATE SIGNED: 2/3/23

RESTRICTIVE NOTICE

THESE DESIGNS, DRAWINGS, AND SPECIFICATIONS ARE THE EXCLUSIVE PROPERTY OF GOUVIS ENGINEERING CONSULTING GROUP. THEY ARE THE SUBJECT OF COPYRIGHT AND OTHER LEGAL PROTECTION. THEY MAY BE USED ONLY BY THEIR INTENDED RECIPIENT AND ONLY FOR THE PROJECT DEPICTED HEREIN. NO PART OF THESE DRAWINGS ARE TO BE COPIED, TRANSFERRED, REPRODUCED, NOR CAN THEY BE USED, IN WHOLE OR IN PART, BY ANY OTHER PERSON OR FOR ANY OTHER PROJECT OR STRUCTURE, WITHOUT THE PRIOR EXPRESS WRITTEN CONSENT OF GOUVIS ENGINEERING CONSULTING GROUP

© 2017 GOUVIS ENGINEERING CONSULTING GROUP INC. - ALL RIGHTS RESERVED

PROJECT:
Tenant Square

DEVELOPER:
Osito Holdings LLC

ARCHITECT:

LOCATION:
Morgan Hill
Santa Clara
CA

REVISIONS

NO.	DATE	DESCRIPTION
1	02/02/23	BLDG DEPT.

SHEET NAME:
ROOF FRAMING PLAN
BUILDING 1 - AREA A

PROJECT NUMBER:
66074

ENGINEER: GE
DRAFTER: GE

SHEET NUMBER:
S-1.3A

SYMBOLS LEGEND

- POST OR TRIMMER AS NOTED
- DIRECTION OF ROOF MEMBER PER SCHEDULE, REFER TO HATCHED WALLS ON PLANS FOR INTERMEDIATE BR'G
- DIRECTION OF FLOOR MEMBER PER SCHEDULE, REFER TO HATCHED WALLS ON PLANS FOR INTERMEDIATE BR'G
- DIRECTION OF DECK MEMBER PER SCHEDULE, REFER TO HATCHED WALLS ON PLANS FOR INTERMEDIATE BR'G
- SHEAR PANEL LENGTH AND NUMBER. REFER TO SN-1 FOR PANEL TYPE
- DETAIL NUMBER / DETAIL SHEET NUMBER
- BEAM NUMBER, REFER TO GOUVIS ENGINEERING CALCULATIONS
- XXX - X.XE: MINIMUM MODULUS OF ELASTICITY (E) / BEAM SIZE, SEE BEAM SCHEDULE
- KEY NOTE NUMBER
- BEARING WALL
- CALIFORNIA FRAMING

KEY NOTES

1. CONTINUOUS 1 1/4" WIDE MIN. LVL / TIMBERSTRAND OR SPLICE PER PLAN.
2. ALIGN POST(S) WITH UPPER FLOOR POST(S), SEE DETAIL 2-SN2
3. CONTINUOUS JOIST W/ E.N.
4. DRAG STRUT W/E.N.. SEE PLANS/DETAILS FOR LENGTH. SUPPORT END W/ BLK'G
5. LINE OF 2X FLAT BLOCKING W/ EDGE NAIL & CONTINUOUS CS16 STRAP OVER U.N.O. SEE PLAN FOR NUMBER OF BAYS.
6. CONTINUOUS FULL HT. BLKG. W/E.N. SEE PLANS FOR NUMBER OF BAYS (U.N.O.)
7. CONTINUOUS LINE OF BLOCKING W/ EDGE NAIL UNDER SHEAR WALL ABOVE W/ (1) CS16, U.N.O.
8. BLOCKED ROOF DIAPHRAGM W/ 8d's @ 4" O.C. B.N., 6" O.C. E.N. & 12" O.C. F.N.
9. BLOCKED FLOOR DIAPHRAGM W/ 10d's @ 4" O.C. B.N., 6" O.C. E.N. & 12" O.C. F.N.
10. SHEAR TRUSS W/E.N. TRUSS TO TRANSFER 180 PLF MIN. (U.N.O.)
11. TRUSS HANGER BY TRUSS SUPPLIER
12. (1) SIMPSON HTS20 FLUSH BEAM TO DROP BEAM (U.N.O.)
13. PROVIDE SOLID BLOCKING
14. DRAG TRUSS W/E.N. TRUSS TO TRANSFER 1700# FORCE MIN. (U.N.O.)
15. BLOCKED OPENING SEE DETAIL 15/SD2
16. CONTINUOUS SHEAR TRUSS W/ E.N OVER EACH PARTY WALL AT ROOF LEVEL DESIGN TRUSS TO TRANSFER 180 PLF MIN. LATERALLY.
17. COUNTERSINK AS REQUIRED NO OVER CUT.

FRAMING SCHEDULE

1. DESIGNED ROOF TRUSSES @ 24" O.C.
2. 14" TJI 210 I-JOISTS (OR EQUAL) @ 19.2" O.C.
3. 14" TJI 210 I-JOISTS (OR EQUAL) @ 16" O.C.
4. 14" TJI 230 I-JOISTS (OR EQUAL) @ 16" O.C.
5. 14" TJI 360 I-JOISTS (OR EQUAL) @ 12" O.C.
6. 2 x 12 DECK JOISTS @ 16" O.C.
7. 2 X 10 ROOF JOISTS / RAFTERS @ 16" O.C.
8. METAL RIBBED ALUMINUM ROOF BY OTHERS. ALT. 2 X 8 ROOF JOISTS @ 16" O.C.

MANUFACTURER		I LEVEL BY WEYERHAEUSER	LOUISIANA PACIFIC	BOISE CASCADE	ROSEBURG
ICC-ES REPORT		ESR-1153	ESR-1305	ESR-1336	ESR-1251
DEPTH	11 7/8"	TJI 210	LPI 36	BCI 6000-1.7	RFPI-400
		TJI 360	LPI 56	BCI 60-2.0	RFPI-70
		TJI 560	N/A	BCI 90-2.0	RFPI-90
	14" & 16"	TJI 210	LPI 530	BCI 6000-1.8	RFPI-400
		TJI 360	LPI 56	BCI 60-2.0	RFPI-70
		TJI 560	N/A	N/A	RFPI-90

FRAMING NOTES

1. REFER TO STRUCTURAL GENERAL NOTES AND DETAIL SHEETS (SN-1 & SN-2) FOR MORE INFORMATION.
2. REFER TO DETAIL 3/SN2 FOR TYPICAL CONNECTION AT ALL INTERIOR NON-BEARING WALLS AT ROOF LEVEL.
3. SHEAR WALLS CANNOT BE USED AS PLUMBING WALLS, UNLESS APPROVED BY GOUVIS ENGINEERING CONSULTING GROUP IN WRITING.
4. AT DOUBLE SIDED SHEAR WALLS, POST W/E.N. PER PLAN TO RECEIVE E.N. FROM BOTH SIDES.
5. WHEN MULTIPLE STUDS ARE USED INSTEAD OF A SINGLE POST, PLYWOOD SHEAR WALL TO BE NAILED TO ALL STUDS RECEIVING HOLDOWNS.
6. APPLY SHEAR PRIOR TO FRAMING OF PERPPENDICULAR WALLS. DO NOT BREAK SHEAR AT PERPENDICULAR WALL LOCATIONS UNLESS SPECIFICALLY DETAILED ON PLANS.

7. ALL VERTICAL PIPES THROUGH PLATES AND/OR SOLID RIM BEAMS MUST BE DRILLED CLEAN CUT W/ 1/16" TOLERANCE. DO NOT NOTCH OR CUT PLATES.
8. ALL BEAMS SHOWN ARE DROP (U.N.O.) ON PLANS.
9. AS AN ALTERNATE TO USING SIMPSON PRODUCTS OTHER CONNECTORS CAN BE USED, AS LONG AS THEIR CAPACITIES ARE EQUAL TO OR BETTER THAN SIMPSON'S, AND SUBJECTED TO THE APPROVAL OF GOUVIS ENGINERING.
10. USE SIMPSON " IUS/ITS/U310 " HANGERS FOR CONNECTION OF I-JOISTS TO OTHER FRAMING MEMBERS (U.N.O.) AND " LUS " HANGERS FOR CONNECTION OF SOLID JOISTS.
11. ALL WOOD I-JOISTS SHALL BE IN COMPLIANCE WITH THE PROVISIONS OF APA PRI-400, EWS-Z725B (PERFORMANCE RATED I-JOIST STANDARD) OR ASTM D5055. QUALIFIED PRI-400, MANUFACTURED. I-JOIST CAN BE ANY OF THOSE LISTED IN THE TABLE ABOVE.
12. ENGINEERING WOOD PRODUCTS (EWP) CAN BE FROM ANY MANUFACTURER WITH CURRENT APPROVED ICC ES - EVALUATION REPORT WITH THE FOLLOWING MECHANICAL PROPERTIES:
    Fb = 2800 psi (MIN), Fv = 285 psi (MIN), E = 2.2 x 10^6 psi (MIN).
    Fb = 2800 psi (MIN), Fv = 285 psi (MIN), E = 2.0 x 10^6 psi (MIN).
    Fb = 2325 psi (MIN), Fv = 285 psi (MIN), E = 1.55 x 10^6 psi (MIN).
    Fb = 1700 psi (MIN), Fv = 285 psi (MIN), E = 1.3 x 10^6 psi (MIN).
    FOR MANUFACTURED RIM BOARD WITH MIN 1 1/4" THICK, CONTINUOUSLY SUPPORTED BY WALL, AND MATCHES JOIST DEPTH:
    Fc ⊥ (PERPENDICULAR)..... = 680 psi (MIN) Ft = 1075 psi (MIN),
    Fc // (PARALLEL)..... = 1400 psi (MIN) E = 1.3 x 10^6 psi (MIN)
    GLU-LAM BEAM SHALL BE:
    24F-V4, DF/DF : Fb = 2400/ 1850 psi @ BOTTOM/ TOP, Fv = 265 psi, E = 1.8 x 10^6 psi (MIN).
    24F-V8, DF/DF : Fb = 2400 psi @ BOTTOM & TOP, Fv = 265 psi, E = 1.8 x 10^6 psi (MIN).
13. A 4x6 (ALT. 2-2x6) HDR. SHOULD BE USED AT ALL OPENINGS IN EXTERIOR & INTERIOR BEARING WALLS U.N.O. ON PLANS. REFER TO THE FOLLOWING TABLE FOR OTHER COMMON HEADER SIZES.

PLAN DESIGNATION	HEADER SIZE	ALT. HEADER SIZE *
H1	4 x 6	2 - 2 x 6
H2	4 x 8	2 - 2 x 8

* 2-2 x SHALL BE PLACED ON END W/ 1/2" PLYWOOD SHIM BETWEEN. PROVIDE 16d NAILS @ 16" O.C., STAGG., BOTH SIDES.

14. THE FOLLOWING TRIMMER SCHEDULE SHOULD BE USED FOR HEADERS IN BEARING WALLS, U.N.O. ON THE PLAN. REQUIRED TRIMMER MUST BE APPLIED @ EACH END OF HEADER.

CLEAR SPAN, L		
L ≤ 6'-0"	6'-0" < L ≤ 10'-0"	L ≥ 10'-0"
2 x	2-2 x	SEE PLAN

15. FLOOR TO FLOOR HOLDOWN (H) APPLY DETAIL AT EACH END OF SHEAR WALL PER PLAN. (2) LOCATIONS PER WALL AS SHOWN BELOW. SEE TABLE FOR TYPE & DETAIL REFFERENCE. MIN. POST SIZE IS NOTED IN THE DETAIL

PER PLAN	REFERENCE & APPLY DETAIL	PER PLAN	REFERENCE & APPLY DETAIL	PER PLAN	REFERENCE & APPLY DETAIL
A	1A / SD-3	C*	1C* / SD-3	F	1F / SD-3
B	1B / SD-3	D	1D / SD-3	G	1G / SD-3
C	1C / SD-3	E	1E / SD-3	H	1H / SD-3

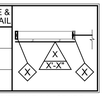

16. INTERIOR NON-BEARING & NON-SHEAR WALLS MAY BE FRAMED WITH 2x STUDS AT 24" O.C., MAX.
17. TOP PLATES AT ALL ROOF FRAMING LEVELS SHOULD BE SPLICED PER 9A/SD2 , U.N.O. ON PLANS.
18. CONTINUOUS 1 ¼" LSL RIM JOISTS SHOULD BE USED AT ALL FLOOR FRAMING EDGES WHERE POSSIBLE. ALL RIM BREAKS SHOULD BE SPLICED WITH A SINGLE CS16 x 36" STRAP, PER 4A/SD2 U.NO. ON PLANS.
19. ATTACH WOOD FRAMING ELEMENT TO STEEL MEMBER WITH 1/2" Ø STUD BOLTS AT 24" O.C. STAGGERED U.N.O
20. REFER TO ARCHITECTURAL PLANS/DETAILS FOR BEAM/COLUMN FIRE RESISTANCE ASSEMBLIES.
21. TIGHT FIT SOLID COMPRESSION BLOCKING REQUIRED BETWEEN DRAG MEMBERS, FILLING GAP AT PARTY WALLS.

STUD AND TRIMMER SCHEDULE

24	2X4 STUD	226	2-2X6 STUD	24T	2X4 TRIMMER	226T	2-2X6 TRIMMER
26	2X6 STUD	324	3-2X4 STUD	26T	2X6 TRIMMER	324T	3-2X4 TRIMMER
224	2-2X4 STUD	326	3-2X6 STUD	224T	2-2X4 TRIMMER	326T	3-2X6 TRIMMER

POST AND TRIMMER SCHEDULE

44	4X4 POST	412	4X12 POST	44T	4X4 TRIMMER	66T	6X6 TRIMMER
46	4X6 POST	66	6X6 POST	46T	4X6 TRIMMER	68T	6X8 TRIMMER
48	4X8 POST	68	6X8 POST	48T	4X8 TRIMMER	88T	8X8 TRIMMER
410	4X10 POST	88	8X8 POST				

BEAM SCHEDULE

414-1.55E	3 1/2"x14" 1.55E EWP FL BM
214-1.55E	1 3/4"x14" 1.55E EWP FL BM
414-2.0E	3 1/2"X14" 2.0E EWP FL BM
614-2.0E	5 1/4"X14" 2.0E EWP FL BM

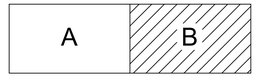

KEYPLAN

HATCHED UNIT INDICATES A "BELOW MARKET RATE" UNIT

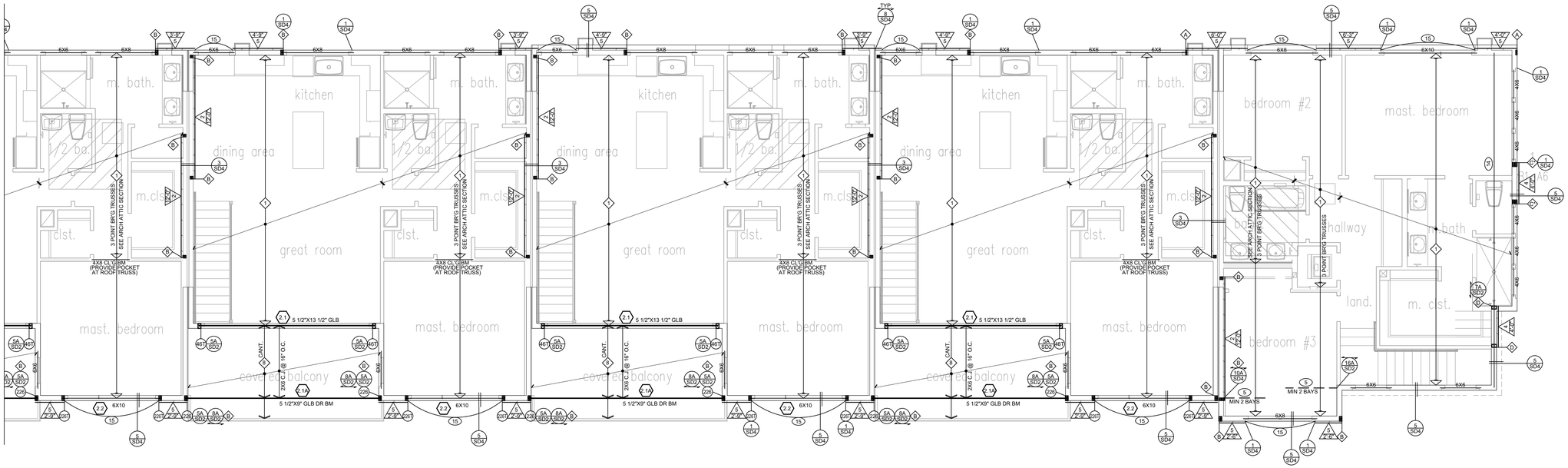

ROOF FRAMING PLAN
BUILDING 1 - AREA B

SCALE : 3/16" = 1'-0"

ISSUED DATE: 5/5/2022

GOUVIS engineering
consulting group, inc.
15 Studebaker
Irvine
CA 92618

Irvine
tel 949.752.1612
fax 949.752.5321

Palm Springs
tel 760.323.5090

REGISTERED PROFESSIONAL ENGINEER
DIRAKORN CHAIYAKUL
No. S 5226
Exp. 6/30/23
STRUCTURAL
STATE OF CALIFORNIA

DATE SIGNED: 2/3/23

RESTRICTIVE NOTICE

THESE DESIGNS, DRAWINGS, AND SPECIFICATIONS ARE THE EXCLUSIVE PROPERTY OF GOUVIS ENGINEERING CONSULTING GROUP. THEY ARE THE SUBJECT OF COPYRIGHT AND OTHER LEGAL PROTECTION. THEY MAY BE USED ONLY BY THEIR INTENDED RECIPIENT AND ONLY FOR THE PROJECT DEPICTED HEREIN. NO PART OF THESE DRAWINGS ARE TO BE COPIED, TRANSFERRED, REPRODUCED, NOR CAN THEY BE USED, IN WHOLE OR IN PART, BY ANY OTHER PERSON OR FOR ANY OTHER PROJECT OR STRUCTURE, WITHOUT THE PRIOR EXPRESS WRITTEN CONSENT OF GOUVIS ENGINEERING CONSULTING GROUP

© 2017 GOUVIS ENGINEERING CONSULTING GROUP INC. - ALL RIGHTS RESERVED

PROJECT:
Tenant Square

DEVELOPER:
Osito Holdings LLC

ARCHITECT:

LOCATION:
Morgan Hill
Santa Clara
CA

REVISIONS

NO.	DATE	DESCRIPTION
1	02/02/23	BLDG DEPT.

SHEET NAME:
ROOF FRAMING PLAN
BUILDING 1 - AREA B

PROJECT NUMBER:
66074

ENGINEER: GE
DRAFTER: GE

SHEET NUMBER:
S-1.3B

SYMBOLS LEGEND

FOOTING

DROP IN SLAB (VERIFY PRIOR TO CONSTRUCTION)

REBAR

PX — PAD NUMBER

X / SDX — DETAIL NUMBER / DETAIL SHEET NUMBER

S / X — MAXIMUM SPACING\ TOTAL MINIMUM NUMBER OF ANCHOR BOLTS EQUALLY SPACED AS POSSIBLE. SEE GENERAL NOTES ON SN-1 SHEET(S) FOR OTHER REQUIREMENTS. FOR NON-SHEAR WALLS, MASA/MASAP MUDSILL ANCHORS CAN BE USED IN LIEU OF ANCHOR BOLTS, ON A ONE TO ONE BASIS, WITH END DISTANCE OF 4" MIN. PER ESR #2555.

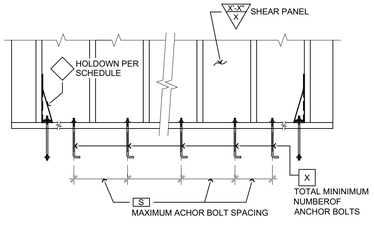

KEY NOTES

1. #5 TOP & BOTT. L=4'-0" RE-ENTRANT CORNER BARS
2. #5 TOP & BOTT. PAST 18" BEYOND POP OUT EA. WAY
3. EXTEND TIE BEAM UNDER SLAB W/ REINFORCEMENT TO BE POURED MONOLITHICALLY WITH SLAB 18" WIDE x 24" DEEP x 4'-0" PAST PRE-FAB PANELS
4. CONC. GRADE BM WITH (2)#5 TOP AND (2)#5 BOTTOM

PAD SCHEDULE

SYM.	PAD TYPE
P1	2'-0" SQ. X 18" DEEP PAD W/ (4) #4 E.W.
P2	2'-6" SQ. X 18" DEEP PAD W/ (5) #4 E.W.
P3	3'-0" SQ. X 18" DEEP PAD W/ (6) #4 E.W.
P4	3'-6" SQ. X 18" DEEP PAD W/ (7) #4 E.W.
P5	4'-0" SQ. X 18" DEEP PAD W/ (8) #4 E.W.
P6	4'-6" SQ. X 18" DEEP PAD W/ (9) #4 E.W.
P7	5'-0" SQ. X 18" DEEP PAD W/ (10) #4 E.W.
P8	5'-6" SQ. X 18" DEEP PAD W/ (11) #4 E.W.

POST TENSION NOTES

1. REFER TO SN-1 SHEET FOR MORE INFO.
2. SEE SHEET PT-1 FOR STRUCTURAL DESIGN NOTES AND TECHNICAL PARAMETERS. SEE POST TENSION DESIGN PLANS FOR SPECIAL CONSTRUCTION NOTES, TENDON AND ANCHORAGE INSTALLATION NOTES, CONCRETE PLACEMENT NOTES, TENDON STRESSING PREPARATION NOTES, TENDON STRESSING PROCEDURE NOTES, STRESSING HOLES SEALING NOTES.
3. VERIFY WITH ARCHITECTURAL (AND STRUCTURAL IF BY OTHERS) DESIGN DRAWINGS (SLAB EDGE PLAN) FOR ALL DIMENSIONS SHOWN ON POST-TENSIONED FOUNDATION PLANS AND REFER TO ARCHITECTURAL (AND STRUCTURAL IF BY OTHERS) DRAWINGS FOR ALL REMAINING DIMENSION NOT SHOWN ON POST-TENSIONED FOUNDATION PLANS. NOTIFY BOTH ACHITECT AND ENGINEER PRIOR TO CONSTRUCTION FOR ANY DISCREPANCIES.
4. VERIFY WITH ARCHITECTURAL (AND STRUCTURAL IF BY OTHERS) DRAWINGS FOR ANCHOR BOLT, HOLDOWN CALLOUT INFORMATION AND SHEAR WALL LOCATIONS.
5. REFER TO DETAILS 16/PT-1 AND 17/PT-1 FOR INSTALLATION OF HOLDOWNS.
6. FOR SHEAR PANEL TYPE X-X/3, X-X/4 & X-X/5 ON BOTH SIDES OF WALL,

   USE MIN. 3X6 SILL PLATES U.N.O.
7. TENDONS EXCEEDING 100 FEET IN LEGNTH'S NEED TWO-WAY STRESSING.

HOLDOWN SCHEDULE

SYM.	HOLDOWNS	MIN. POST SIZE (U.N.O. ON PLAN)	BOLT TYPES	CONC PAD SIZES FOR PAB BOLTS
ST1	STHD10	2-2 x 4 OR 4 x 4		
ST2	STHD14	2-2 x 4 OR 4 x 4		
ST3	STHD10RJ	2-2 x 4 OR 4 x 4		
ST4	STHD14RJ	2-2 x 4 OR 4 x 4		
TD1	HTT5	2-2 x 4 OR 4 x 4	SSTB24 OR PAB5	1'-6" SQ. x 12" DEEP
TD2	HDU8	4 x 4	SSTB28 OR PAB7	2'-3" SQ. x 15" DEEP
TD3	HDQ8	4 x 4	SSTB28 OR PAB7	2'-3" SQ. x 15" DEEP
TD4	HDU11	4 x 6	PAB8	2'-9" SQ. x 16" DEEP
TD5	HDU14	4 x 8	PAB8	2'-9" SQ. x 16" DEEP
TD6	HHDQ11	4 x 6	PAB8	2'-9" SQ. x 16" DEEP
TD7	HHDQ14	4 x 8	PAB8	2'-9" SQ. x 16" DEEP
TD8	HD12	4 x 6	PAB9	3'-2" SQ. x 18" DEEP
TD9	HD19	6 x 6	PAB10	3'-8" SQ. x 20" DEEP

NOTE: REFER TO 16/PT1 FOR TD HOLDOWNS AND 17/PT1 FOR ST HOLDOWNS.

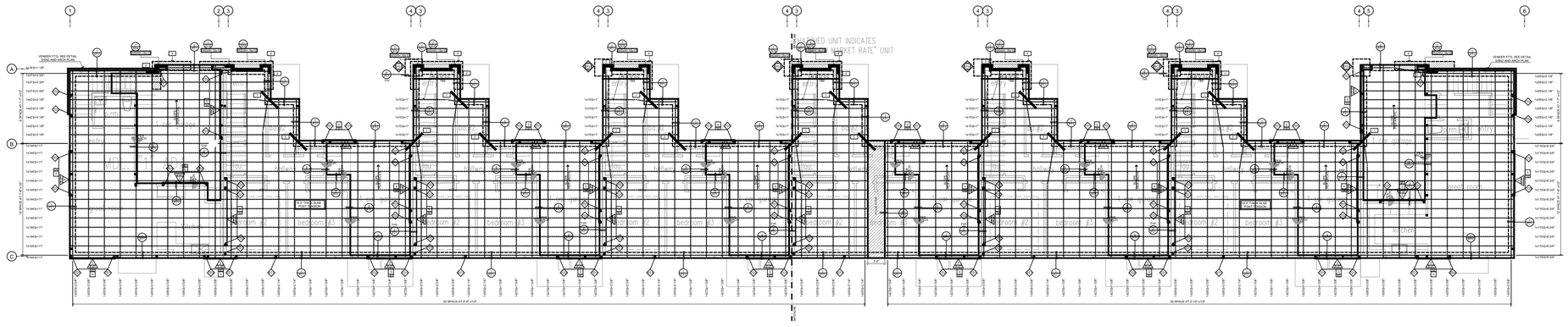

OVERALL P.T. FOUNDATION PLAN
BUILDING 2

SCALE : 3/32" = 1'-0"

ISSUED DATE: 5/5/2022

GOUVIS engineering
consulting group, inc.®

15 Studebaker
Irvine
CA 92618

Irvine
tel 949.752.1612
fax 949.752.5321

Palm Springs
tel 760.323.5090

REGISTERED PROFESSIONAL ENGINEER — DIBAKORN CHAKUL — No. S 5226 — Exp. 6/30/23 — STRUCTURAL — STATE OF CALIFORNIA

DATE SIGNED: 2/3/23

RESTRICTIVE NOTICE

THESE DESIGNS, DRAWINGS, AND SPECIFICATIONS ARE THE EXCLUSIVE PROPERTY OF GOUVIS ENGINEERING CONSULTING GROUP. THEY ARE THE SUBJECT OF COPYRIGHT AND OTHER LEGAL PROTECTION. THEY MAY BE USED ONLY BY THEIR INTENDED RECIPIENT AND ONLY FOR THE PROJECT DEPICTED HEREIN. NO PART OF THESE DRAWINGS ARE TO BE COPIED, TRANSFERRED, REPRODUCED, NOR CAN THEY BE USED, IN WHOLE OR IN PART, BY ANY OTHER PERSON OR FOR ANY OTHER PROJECT OR STRUCTURE, WITHOUT THE PRIOR EXPRESS WRITTEN CONSENT OF GOUVIS ENGINEERING CONSULTING GROUP

© 2017 GOUVIS ENGINEERING CONSULTING GROUP INC. - ALL RIGHTS RESERVED

PROJECT:
Tenant Square

DEVELOPER:
Osito Holdings LLC

ARCHITECT:

LOCATION:
Morgan Hill
Santa Clara
CA

REVISIONS

NO.	DATE	DESCRIPTION
1	02/02/23	BLDG DEPT.

SHEET NAME:
OVERALL
P.T. FOUNDATION PLAN
BUILDING 2

PROJECT NUMBER:
66074

ENGINEER: GE
DRAFTER: GE

SHEET NUMBER:
S-2.1

SYMBOLS LEGEND

FOOTING

DROP IN SLAB (VERIFY PRIOR TO CONSTRUCTION)

REBAR

PX — PAD NUMBER

X / SDX — DETAIL NUMBER / DETAIL SHEET NUMBER

S / X — MAXIMUM SPACING\ TOTAL MINIMUM NUMBER OF ANCHOR BOLTS EQUALLY SPACED AS POSSIBLE. SEE GENERAL NOTES ON SN-1 SHEET(S) FOR OTHER REQUIREMENTS. FOR NON-SHEAR WALLS, MASA/MASAP MUDSILL ANCHORS CAN BE USED IN LIEU OF ANCHOR BOLTS, ON A ONE TO ONE BASIS, WITH END DISTANCE OF 4" MIN. PER ESR #2555.

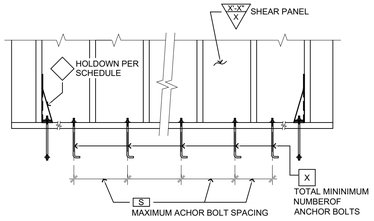

KEY NOTES

1. #5 TOP & BOTT. L=4'-0" RE-ENTRANT CORNER BARS
2. #5 TOP & BOTT. PAST 18" BEYOND POP OUT EA. WAY
3. EXTEND TIE BEAM UNDER SLAB W/ REINFORCEMENT TO BE POURED MONOLITHICALLY WITH SLAB
4. 18" WIDE x 24" DEEP x 4'-0" PAST PRE-FAB PANELS CONC. GRADE BM WITH (2)#5 TOP AND (2)#5 BOTTOM

PAD SCHEDULE

SYM.	PAD TYPE
P1	2'-0" SQ. X 18" DEEP PAD W/ (4) #4 E.W.
P2	2'-6" SQ. X 18" DEEP PAD W/ (5) #4 E.W.
P3	3'-0" SQ. X 18" DEEP PAD W/ (6) #4 E.W.
P4	3'-6" SQ. X 18" DEEP PAD W/ (7) #4 E.W.
P5	4'-0" SQ. X 18" DEEP PAD W/ (8) #4 E.W.
P6	4'-6" SQ. X 18" DEEP PAD W/ (9) #4 E.W.
P7	5'-0" SQ. X 18" DEEP PAD W/ (10) #4 E.W.
P8	5'-6" SQ. X 18" DEEP PAD W/ (11) #4 E.W.

POST TENSION NOTES

1. REFER TO SN-1 SHEET FOR MORE INFO.
2. SEE SHEET PT-1 FOR STRUCTURAL DESIGN NOTES AND TECHNICAL PARAMETERS. SEE POST TENSION DESIGN PLANS FOR SPECIAL CONSTRUCTION NOTES, TENDON AND ANCHORAGE INSTALLATION NOTES, CONCRETE PLACEMENT NOTES, TENDON STRESSING PREPARATION NOTES, TENDON STRESSING PROCEDURE NOTES, STRESSING HOLES SEALING NOTES.
3. VERIFY WITH ARCHITECTURAL (AND STRUCTURAL IF BY OTHERS) DESIGN DRAWINGS (SLAB EDGE PLAN) FOR ALL DIMENSIONS SHOWN ON POST-TENSIONED FOUNDATION PLANS AND REFER TO ARCHITECTURAL (AND STRUCTURAL IF BY OTHERS) DRAWINGS FOR ALL REMAINING DIMENSION NOT SHOWN ON POST-TENSIONED FOUNDATION PLANS. NOTIFY BOTH ACHITECT AND ENGINEER PRIOR TO CONSTRUCTION FOR ANY DISCREPANCIES.
4. VERIFY WITH ARCHITECTURAL (AND STRUCTURAL IF BY OTHERS) DRAWINGS FOR ANCHOR BOLT, HOLDOWN CALLOUT INFORMATION AND SHEAR WALL LOCATIONS.
5. REFER TO DETAILS 16/PT-1 AND 17/PT-1 FOR INSTALLATION OF HOLDOWNS.
6. FOR SHEAR PANEL TYPE X-X/3, X-X/4 & X-X/5 ON BOTH SIDES OF WALL,

   USE MIN. 3X6 SILL PLATES U.N.O.
7. TENDONS EXCEEDING 100 FEET IN LEGNTH'S NEED TWO-WAY STRESSING.

HOLDOWN SCHEDULE

SYM.	HOLDOWNS	MIN. POST SIZE (U.N.O. ON PLAN)	BOLT TYPES	CONC PAD SIZES FOR PAB BOLTS
ST1	STHD10	2-2 x 4 OR 4 x 4		
ST2	STHD14	2-2 x 4 OR 4 x 4		
ST3	STHD10RJ	2-2 x 4 OR 4 x 4		
ST4	STHD14RJ	2-2 x 4 OR 4 x 4		
TD1	HTT5	2-2 x 4 OR 4 x 4	SSTB24 OR PAB5	1'-6" SQ. x 12" DEEP
TD2	HDU8	4 x 4	SSTB28 OR PAB7	2'-3" SQ. x 15" DEEP
TD3	HDQ8	4 x 4	SSTB28 OR PAB7	2'-3" SQ. x 15" DEEP
TD4	HDU11	4 x 6	PAB8	2'-9" SQ. x 16" DEEP
TD5	HDU14	4 x 8	PAB8	2'-9" SQ. x 16" DEEP
TD6	HHDQ11	4 x 6	PAB8	2'-9" SQ. x 16" DEEP
TD7	HHDQ14	4 x 8	PAB8	2'-9" SQ. x 16" DEEP
TD8	HD12	4 x 6	PAB9	3'-2" SQ. x 18" DEEP
TD9	HD19	6 x 6	PAB10	3'-8" SQ. x 20" DEEP

NOTE: REFER TO 16/PT1 FOR TD HOLDOWNS AND 17/PT1 FOR ST HOLDOWNS.

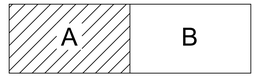

KEYPLAN

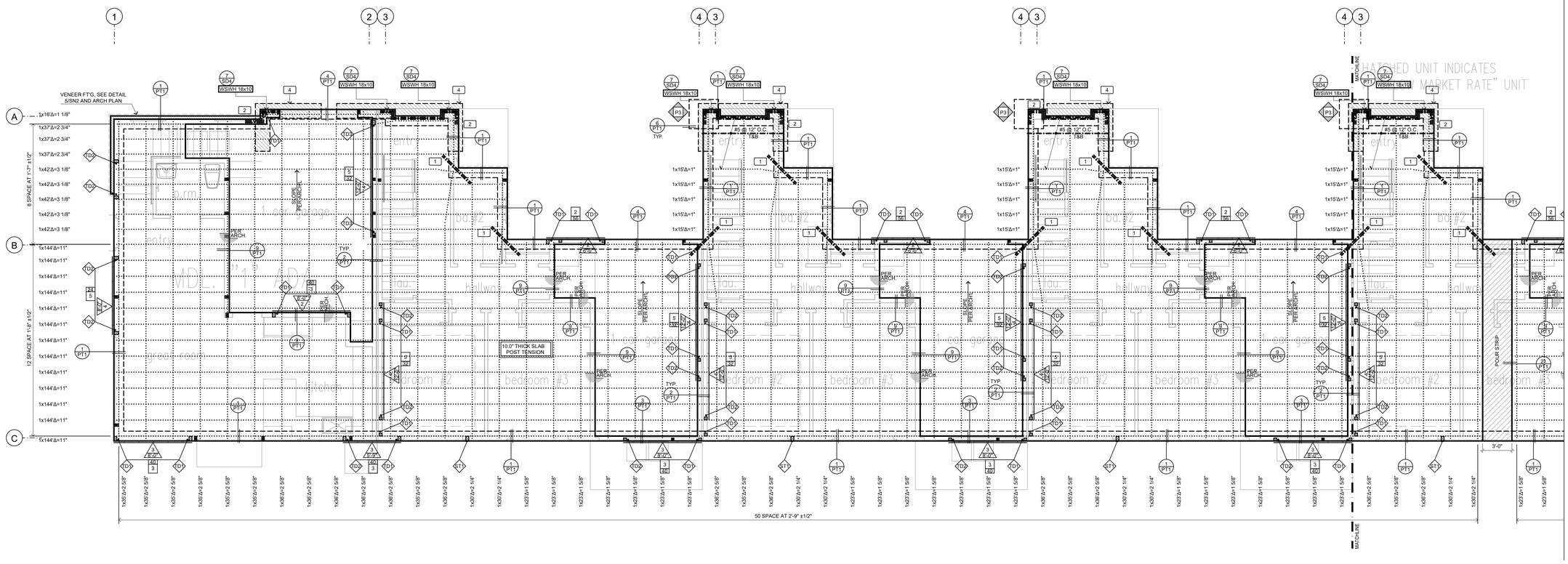

P.T. FOUNDATION PLAN
BUILDING 2 - AREA A

SCALE : 3/16" = 1'-0"

ISSUED DATE: 5/5/2022

GOUVIS engineering consulting group, inc.®

15 Studebaker
Irvine
CA 92618

Irvine
tel 949.752.1612
fax 949.752.5321

Palm Springs
tel 760.323.5090

REGISTERED PROFESSIONAL ENGINEER — DIBAKORN CHAKTU — No. S 5226 — Exp. 6/30/23 — STRUCTURAL — STATE OF CALIFORNIA

DATE SIGNED: 2/3/23

RESTRICTIVE NOTICE

THESE DESIGNS, DRAWINGS, AND SPECIFICATIONS ARE THE EXCLUSIVE PROPERTY OF GOUVIS ENGINEERING CONSULTING GROUP. THEY ARE THE SUBJECT OF COPYRIGHT AND OTHER LEGAL PROTECTION. THEY MAY BE USED ONLY BY THEIR INTENDED RECIPIENT AND ONLY FOR THE PROJECT DEPICTED HEREIN. NO PART OF THESE DRAWINGS ARE TO BE COPIED, TRANSFERRED, REPRODUCED, NOR CAN THEY BE USED, IN WHOLE OR IN PART, BY ANY OTHER PERSON OR FOR ANY OTHER PROJECT OR STRUCTURE, WITHOUT THE PRIOR EXPRESS WRITTEN CONSENT OF GOUVIS ENGINEERING CONSULTING GROUP

© 2017 GOUVIS ENGINEERING CONSULTING GROUP INC. - ALL RIGHTS RESERVED

PROJECT:
Tenant Square

DEVELOPER:
Osito Holdings LLC

ARCHITECT:

LOCATION:
Morgan Hill
Santa Clara
CA

REVISIONS

NO.	DATE	DESCRIPTION
1	02/02/23	BLDG DEPT.

SHEET NAME:
P.T. FOUNDATION PLAN
BUILDING 2 - AREA A

PROJECT NUMBER:
66074

ENGINEER: GE
DRAFTER: GE

SHEET NUMBER:
S-2.1A

SYMBOLS LEGEND

FOOTING

DROP IN SLAB (VERIFY PRIOR TO CONSTRUCTION)

REBAR

PX — PAD NUMBER

X / SDX — DETAIL NUMBER / DETAIL SHEET NUMBER

S / X — MAXIMUM SPACING\ TOTAL MINIMUM NUMBER OF ANCHOR BOLTS EQUALLY SPACED AS POSSIBLE. SEE GENERAL NOTES ON SN-1 SHEET(S) FOR OTHER REQUIREMENTS. FOR NON-SHEAR WALLS, MASA/MASAP MUDSILL ANCHORS CAN BE USED IN LIEU OF ANCHOR BOLTS, ON A ONE TO ONE BASIS, WITH END DISTANCE OF 4" MIN. PER ESR #2555.

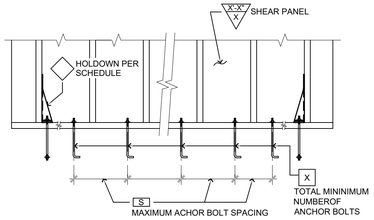

KEY NOTES

1. #5 TOP & BOTT. L=4'-0" RE-ENTRANT CORNER BARS
2. #5 TOP & BOTT. PAST 18" BEYOND POP OUT EA. WAY
3. EXTEND TIE BEAM UNDER SLAB W/ REINFORCEMENT TO BE POURED MONOLITHICALLY WITH SLAB 18" WIDE x 24" DEEP x 4'-0" PAST PRE-FAB PANELS
4. CONC. GRADE BM WITH (2)#5 TOP AND (2)#5 BOTTOM

PAD SCHEDULE

SYM.	PAD TYPE
P1	2'-0" SQ. X 18" DEEP PAD W/ (4) #4 E.W.
P2	2'-6" SQ. X 18" DEEP PAD W/ (5) #4 E.W.
P3	3'-0" SQ. X 18" DEEP PAD W/ (6) #4 E.W.
P4	3'-6" SQ. X 18" DEEP PAD W/ (7) #4 E.W.
P5	4'-0" SQ. X 18" DEEP PAD W/ (8) #4 E.W.
P6	4'-6" SQ. X 18" DEEP PAD W/ (9) #4 E.W.
P7	5'-0" SQ. X 18" DEEP PAD W/ (10) #4 E.W.
P8	5'-6" SQ. X 18" DEEP PAD W/ (11) #4 E.W.

POST TENSION NOTES

1. REFER TO SN-1 SHEET FOR MORE INFO.
2. SEE SHEET PT-1 FOR STRUCTURAL DESIGN NOTES AND TECHNICAL PARAMETERS. SEE POST TENSION DESIGN PLANS FOR SPECIAL CONSTRUCTION NOTES, TENDON AND ANCHORAGE INSTALLATION NOTES, CONCRETE PLACEMENT NOTES, TENDON STRESSING PREPARATION NOTES, TENDON STRESSING PROCEDURE NOTES, STRESSING HOLES SEALING NOTES.
3. VERIFY WITH ARCHITECTURAL (AND STRUCTURAL IF BY OTHERS) DESIGN DRAWINGS (SLAB EDGE PLAN) FOR ALL DIMENSIONS SHOWN ON POST-TENSIONED FOUNDATION PLANS AND REFER TO ARCHITECTURAL (AND STRUCTURAL IF BY OTHERS) DRAWINGS FOR ALL REMAINING DIMENSION NOT SHOWN ON POST-TENSIONED FOUNDATION PLANS. NOTIFY BOTH ACHITECT AND ENGINEER PRIOR TO CONSTRUCTION FOR ANY DISCREPANCIES.
4. VERIFY WITH ARCHITECTURAL (AND STRUCTURAL IF BY OTHERS) DRAWINGS FOR ANCHOR BOLT, HOLDOWN CALLOUT INFORMATION AND SHEAR WALL LOCATIONS.
5. REFER TO DETAILS 16/PT-1 AND 17/PT-1 FOR INSTALLATION OF HOLDOWNS.
6. FOR SHEAR PANEL TYPE X-X/3, X-X/4 & X-X/5 ON BOTH SIDES OF WALL, USE MIN. 3X6 SILL PLATES U.N.O.
7. TENDONS EXCEEDING 100 FEET IN LEGNTH'S NEED TWO-WAY STRESSING.

HOLDOWN SCHEDULE

SYM.	HOLDOWNS	MIN. POST SIZE (U.N.O. ON PLAN)	BOLT TYPES	CONC PAD SIZES FOR PAB BOLTS
ST1	STHD10	2-2 x 4 OR 4 x 4		
ST2	STHD14	2-2 x 4 OR 4 x 4		
ST3	STHD10RJ	2-2 x 4 OR 4 x 4		
ST4	STHD14RJ	2-2 x 4 OR 4 x 4		
TD1	HTT5	2-2 x 4 OR 4 x 4	SSTB24 OR PAB5	1'-6" SQ. x 12" DEEP
TD2	HDU8	4 x 4	SSTB28 OR PAB7	2'-3" SQ. x 15" DEEP
TD3	HDQ8	4 x 4	SSTB28 OR PAB7	2'-3" SQ. x 15" DEEP
TD4	HDU11	4 x 6	PAB8	2'-9" SQ. x 16" DEEP
TD5	HDU14	4 x 8	PAB8	2'-9" SQ. x 16" DEEP
TD6	HHDQ11	4 x 6	PAB8	2'-9" SQ. x 16" DEEP
TD7	HHDQ14	4 x 8	PAB8	2'-9" SQ. x 16" DEEP
TD8	HD12	4 x 6	PAB9	3'-2" SQ. x 18" DEEP
TD9	HD19	6 x 6	PAB10	3'-8" SQ. x 20" DEEP

NOTE: REFER TO 16/PT1 FOR TD HOLDOWNS AND 17/PT1 FOR ST HOLDOWNS.

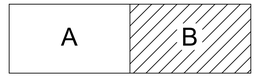

KEYPLAN

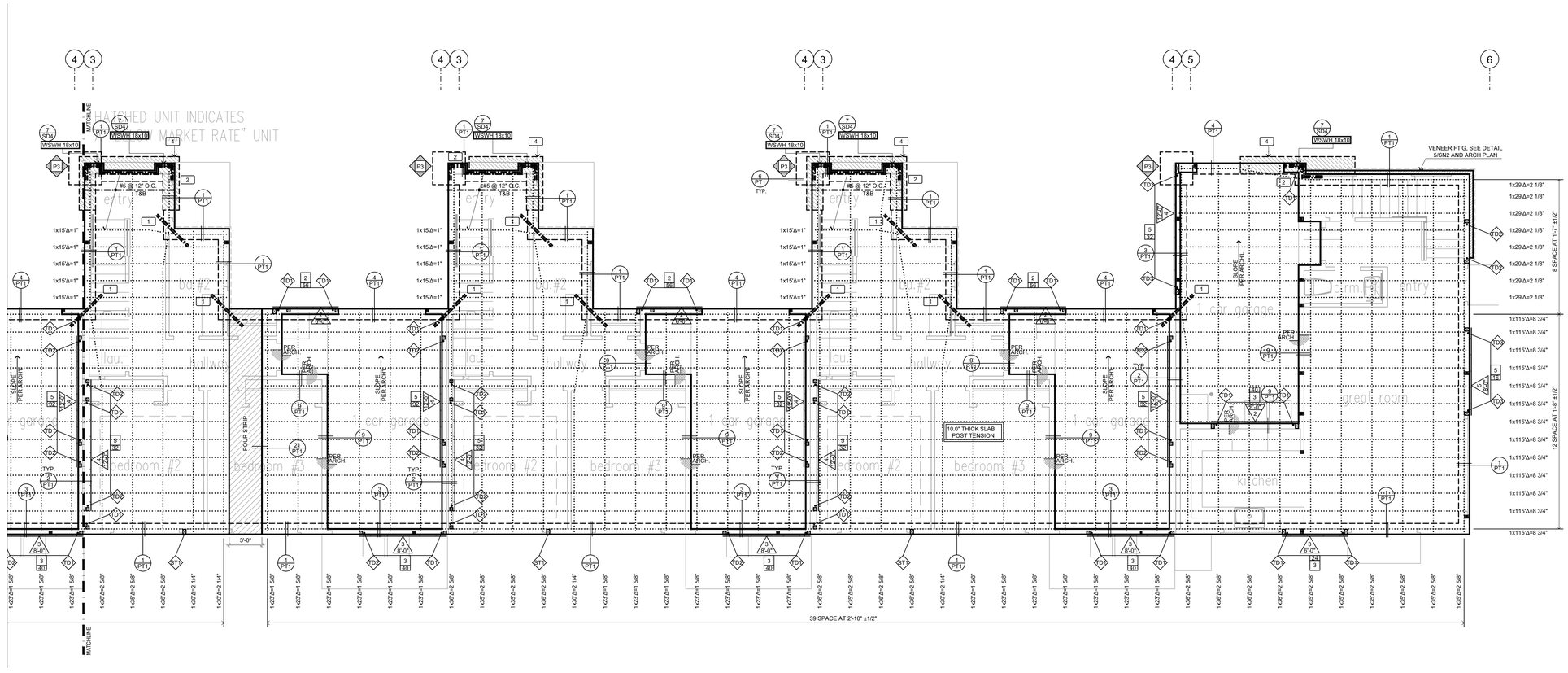

P.T. FOUNDATION PLAN
BUILDING 2 - AREA B

SCALE : 3/16" = 1'-0"

ISSUED DATE: 5/5/2022

GOUVIS engineering consulting group, inc.®

15 Studebaker
Irvine
CA 92618

Irvine
tel 949.752.1612
fax 949.752.5321

Palm Springs
tel 760.323.5090

REGISTERED PROFESSIONAL ENGINEER — DIBAKORN CHAKAIL — No. S 5226 — Exp. 6/30/23 — STRUCTURAL — STATE OF CALIFORNIA

DATE SIGNED: 2/3/23

RESTRICTIVE NOTICE

THESE DESIGNS, DRAWINGS, AND SPECIFICATIONS ARE THE EXCLUSIVE PROPERTY OF GOUVIS ENGINEERING CONSULTING GROUP. THEY ARE THE SUBJECT OF COPYRIGHT AND OTHER LEGAL PROTECTION. THEY MAY BE USED ONLY BY THEIR INTENDED RECIPIENT AND ONLY FOR THE PROJECT DEPICTED HEREIN. NO PART OF THESE DRAWINGS ARE TO BE COPIED, TRANSFERRED, REPRODUCED, NOR CAN THEY BE USED, IN WHOLE OR IN PART, BY ANY OTHER PERSON OR FOR ANY OTHER PROJECT OR STRUCTURE, WITHOUT THE PRIOR EXPRESS WRITTEN CONSENT OF GOUVIS ENGINEERING CONSULTING GROUP

© 2017 GOUVIS ENGINEERING CONSULTING GROUP INC. - ALL RIGHTS RESERVED

PROJECT:
Tenant Square

DEVELOPER:
Osito Holdings LLC

ARCHITECT:

LOCATION:
Morgan Hill
Santa Clara
CA

REVISIONS

NO.	DATE	DESCRIPTION
1	02/02/23	BLDG DEPT.

SHEET NAME:
P.T. FOUNDATION PLAN
BUILDING 2 - AREA B

PROJECT NUMBER:
66074

ENGINEER: GE
DRAFTER: GE

SHEET NUMBER:
S-2.1B

SYMBOLS LEGEND

- POST OR TRIMMER AS NOTED
- DIRECTION OF ROOF MEMBER PER SCHEDULE, REFER TO HATCHED WALLS ON PLANS FOR INTERMEDIATE BR'G
- DIRECTION OF FLOOR MEMBER PER SCHEDULE, REFER TO HATCHED WALLS ON PLANS FOR INTERMEDIATE BR'G
- DIRECTION OF DECK MEMBER PER SCHEDULE, REFER TO HATCHED WALLS ON PLANS FOR INTERMEDIATE BR'G
- SHEAR PANEL LENGTH AND NUMBER. REFER TO SN-1 FOR PANEL TYPE
- DETAIL NUMBER / DETAIL SHEET NUMBER
- BEAM NUMBER, REFER TO GOUVIS ENGINEERING CALCULATIONS
- MINIMUM MODULUS OF ELASTICITY (E) / BEAM SIZE, SEE BEAM SCHEDULE
- KEY NOTE NUMBER
- BEARING WALL
- CALIFORNIA FRAMING

KEY NOTES

1. CONTINUOUS 1 1/4" WIDE MIN. LVL / TIMBERSTRAND OR SPLICE PER PLAN.
2. ALIGN POST(S) WITH UPPER FLOOR POST(S), SEE DETAIL 2-SN2
3. CONTINUOUS JOIST W/ E.N.
4. DRAG STRUT W/E.N., SEE PLANS/DETAILS FOR LENGTH. SUPPORT END W/ BLK'G
5. LINE OF 2X FLAT BLOCKING W/ EDGE NAIL & CONTINUOUS CS16 STRAP OVER U.N.O. SEE PLAN FOR NUMBER OF BAYS.
6. CONTINUOUS FULL HT. BLKG. W/E.N. SEE PLANS FOR NUMBER OF BAYS (U.N.O.)
7. CONTINUOUS LINE OF BLOCKING W/ EDGE NAIL UNDER SHEAR WALL ABOVE W/ (1) CS16, U.N.O.
8. BLOCKED ROOF DIAPHRAGM W/ 8d's @ 4" O.C. B.N., 6" O.C. E.N. & 12" O.C. F.N.
9. BLOCKED FLOOR DIAPHRAGM W/ 10d's @ 4" O.C. B.N., 6" O.C. E.N. & 12" O.C. F.N.
10. SHEAR TRUSS W/E.N. TRUSS TO TRANSFER 180 PLF MIN. (U.N.O.)
11. TRUSS HANGER BY TRUSS SUPPLIER
12. (1) SIMPSON HTS20 FLUSH BEAM TO DROP BEAM (U.N.O.)
13. PROVIDE SOLID BLOCKING
14. DRAG TRUSS W/E.N. TRUSS TO TRANSFER 1700# FORCE MIN. (U.N.O.)
15. BLOCKED OPENING SEE DETAIL 15/SD2
16. CONTINUOUS SHEAR TRUSS W/ E.N OVER EACH PARTY WALL AT ROOF LEVEL DESIGN TRUSS TO TRANSFER 180 PLF MIN. LATERALLY.
17. COUNTERSINK AS REQUIRED NO OVER CUT.

FRAMING SCHEDULE

1. DESIGNED ROOF TRUSSES @ 24" O.C.
2. 14" TJI 210 I-JOISTS (OR EQUAL) @ 19.2" O.C.
3. 14" TJI 210 I-JOISTS (OR EQUAL) @ 16" O.C.
4. 14" TJI 230 I-JOISTS (OR EQUAL) @ 16" O.C.
5. 14" TJI 360 I-JOISTS (OR EQUAL) @ 12" O.C.
6. 2 x 12 DECK JOISTS @ 16" O.C.
7. 2 X 10 ROOF JOISTS / RAFTERS @ 16" O.C.
8. METAL RIBBED ALUMINUM ROOF BY OTHERS. ALT. 2 X 8 ROOF JOISTS @ 16" O.C.

MANUFACTURER		I LEVEL BY WEYERHAEUSER	LOUISIANA PACIFIC	BOISE CASCADE	ROSEBURG
ICC-ES REPORT		ESR-1153	ESR-1305	ESR-1336	ESR-1251
DEPTH	11 7/8"	TJI 210	LPI 36	BCI 6000-1.7	RFPI-400
		TJI 360	LPI 56	BCI 60-2.0	RFPI-70
		TJI 560	N/A	BCI 90-2.0	RFPI-90
	14" & 16"	TJI 210	LPI 530	BCI 6000-1.8	RFPI-400
		TJI 360	LPI 56	BCI 60-2.0	RFPI-70
		TJI 560	N/A	N/A	RFPI-90

FRAMING NOTES

1. REFER TO STRUCTURAL GENERAL NOTES AND DETAIL SHEETS (SN-1 & SN-2) FOR MORE INFORMATION.
2. REFER TO DETAIL 3/SN2 FOR TYPICAL CONNECTION AT ALL INTERIOR NON-BEARING WALLS AT ROOF LEVEL.
3. SHEAR WALLS CANNOT BE USED AS PLUMBING WALLS, UNLESS APPROVED BY GOUVIS ENGINEERING CONSULTING GROUP IN WRITING.
4. AT DOUBLE SIDED SHEAR WALLS, POST W/E.N. PER PLAN TO RECEIVE E.N. FROM BOTH SIDES.
5. WHEN MULTIPLE STUDS ARE USED INSTEAD OF A SINGLE POST, PLYWOOD SHEAR WALL TO BE NAILED TO ALL STUDS RECEIVING HOLDOWNS.
6. APPLY SHEAR PRIOR TO FRAMING OF PERPENDICULAR WALLS. DO NOT BREAK SHEAR AT PERPENDICULAR WALL LOCATIONS UNLESS SPECIFICALLY DETAILED ON PLANS.

7. ALL VERTICAL PIPES THROUGH PLATES AND/OR SOLID RIM BEAMS MUST BE DRILLED CLEAN CUT W/ 1/16" TOLERANCE. DO NOT NOTCH OR CUT PLATES.
8. ALL BEAMS SHOWN ARE DROP (U.N.O.) ON PLANS.
9. AS AN ALTERNATE TO USING SIMPSON PRODUCTS OTHER CONNECTORS CAN BE USED, AS LONG AS THEIR CAPACITIES ARE EQUAL TO OR BETTER THAN SIMPSON'S, AND SUBJECTED TO THE APPROVAL OF GOUVIS ENGINERING.
10. USE SIMPSON " IUS/ITS/U310 " HANGERS FOR CONNECTION OF I-JOISTS TO OTHER FRAMING MEMBERS (U.N.O.) AND " LUS " HANGERS FOR CONNECTION OF SOLID JOISTS.
11. ALL WOOD I-JOISTS SHALL BE IN COMPLIANCE WITH THE PROVISIONS OF APA PRI-400, EWS-Z725B (PERFORMANCE RATED I-JOIST STANDARD) OR ASTM D5055. QUALIFIED PRI-400, MANUFACTURED. I-JOIST CAN BE ANY OF THOSE LISTED IN THE TABLE ABOVE.
12. ENGINEERING WOOD PRODUCTS (EWP) CAN BE FROM ANY MANUFACTURER WITH CURRENT APPROVED ICC ES - EVALUATION REPORT WITH THE FOLLOWING MECHANICAL PROPERTIES:
    Fb = 2800 psi (MIN), Fv = 285 psi (MIN), E = 2.2 x 10^6 psi (MIN).
    Fb = 2800 psi (MIN), Fv = 285 psi (MIN), E = 2.0 x 10^6 psi (MIN).
    Fb = 2325 psi (MIN), Fv = 285 psi (MIN), E = 1.55 x 10^6 psi (MIN).
    Fb = 1700 psi (MIN), Fv = 285 psi (MIN), E = 1.3 x 10^6 psi (MIN).
    FOR MANUFACTURED RIM BOARD WITH MIN 1 1/4" THICK, CONTINUOUSLY SUPPORTED BY WALL AND MATCHES JOIST DEPTH:
    Fc ⊥ (PERPENDICULAR)..... = 680 psi (MIN) Ft = 1075 psi (MIN),
    Fc // (PARALLEL)..... = 1400 psi (MIN) E = 1.3 x 10^6 psi (MIN)
    GLU-LAM BEAM SHALL BE:
    24F-V4, DF/DF : Fb = 2400/ 1850 psi @ BOTTOM/ TOP, Fv = 265 psi, E = 1.8 x 10^6 psi (MIN).
    24F-V8, DF/DF : Fb = 2400 psi @ BOTTOM & TOP, Fv = 265 psi, E = 1.8 x 10^6 psi (MIN).
13. A 4x6 (ALT. 2-2x6) HDR. SHOULD BE USED AT ALL OPENINGS IN EXTERIOR & INTERIOR BEARING WALLS U.N.O. ON PLANS. REFER TO THE FOLLOWING TABLE FOR OTHER COMMON HEADER SIZES.

PLAN DESIGNATION	HEADER SIZE	ALT. HEADER SIZE *
H1	4 x 6	2 - 2 x 6
H2	4 x 8	2 - 2 x 8

* 2-2 x SHALL BE PLACED ON END W/ 1/2" PLYWOOD SHIM BETWEEN. PROVIDE 16d NAILS @ 16" O.C., STAGG., BOTH SIDES.

14. THE FOLLOWING TRIMMER SCHEDULE SHOULD BE USED FOR HEADERS IN BEARING WALLS, U.N.O. ON THE PLAN. REQUIRED TRIMMER MUST BE APPLIED @ EACH END OF HEADER.

CLEAR SPAN, L		
L ≤ 6'-0"	6'-0" < L ≤ 10'-0"	L ≥ 10'-0"
2 x	2-2 x	SEE PLAN

15. FLOOR TO FLOOR HOLDOWN (H) APPLY DETAIL AT EACH END OF SHEAR WALL PER PLAN. (2) LOCATIONS PER WALL AS SHOWN BELOW. SEE TABLE FOR TYPE & DETAIL REFFERENCE. MIN. POST SIZE IS NOTED IN THE DETAIL

PER PLAN	REFERENCE & APPLY DETAIL	PER PLAN	REFERENCE & APPLY DETAIL	PER PLAN	REFERENCE & APPLY DETAIL
A	1A / SD-3	C*	1C* / SD-3	F	1F / SD-3
B	1B / SD-3	D	1D / SD-3	G	1G / SD-3
C	1C / SD-3	E	1E / SD-3	H	1H / SD-3

16. INTERIOR NON-BEARING & NON-SHEAR WALLS MAY BE FRAMED WITH 2x STUDS AT 24" O.C., MAX.
17. TOP PLATES AT ALL ROOF FRAMING LEVELS SHOULD BE SPLICED PER 9A/SD2, U.N.O. ON PLANS.
18. CONTINUOUS 1 ½" LSL RIM JOISTS SHOULD BE USED AT ALL FLOOR FRAMING EDGES WHERE POSSIBLE. ALL RIM BREAKS SHOULD BE SPLICED WITH A SINGLE CS16 x 36" STRAP, PER 4A/SD2 U.NO. ON PLANS.
19. ATTACH WOOD FRAMING ELEMENT TO STEEL MEMBER WITH 1/2" Ø STUD BOLTS AT 24" O.C. STAGGERED U.N.O
20. REFER TO ARCHITECTURAL PLANS/DETAILS FOR BEAM/COLUMN FIRE RESISTANCE ASSEMBLIES.
21. TIGHT FIT SOLID COMPRESSION BLOCKING REQUIRED BETWEEN DRAG MEMBERS, FILLING GAP AT PARTY WALLS.

STUD AND TRIMMER SCHEDULE

24	2X4 STUD	226	2-2X6 STUD	24T	2X4 TRIMMER	26T	2-2X6 TRIMMER
26	2X6 STUD	324	3-2X4 STUD	26T	2X6 TRIMMER	24T	3-2X4 TRIMMER
224	2-2X4 STUD	326	3-2X6 STUD	24T	2-2X4 TRIMMER	26T	3-2X6 TRIMMER

POST AND TRIMMER SCHEDULE

44	4X4 POST	412	4X12 POST	44T	4X4 TRIMMER	66T	6X6 TRIMMER
46	4X6 POST	66	6X6 POST	46T	4X6 TRIMMER	68T	6X8 TRIMMER
48	4X8 POST	68	6X8 POST	48T	4X8 TRIMMER	88T	8X8 TRIMMER
410	4X10 POST	88	8X8 POST				

BEAM SCHEDULE

414-1.55E	3 1/2"x14" 1.55E EWP FL BM
214-1.55E	1 3/4"x14" 1.55E EWP FL BM
414-2.0E	3 1/2"X14" 2.0E EWP FL BM
614-2.0E	5 1/4"X14" 2.0E EWP FL BM

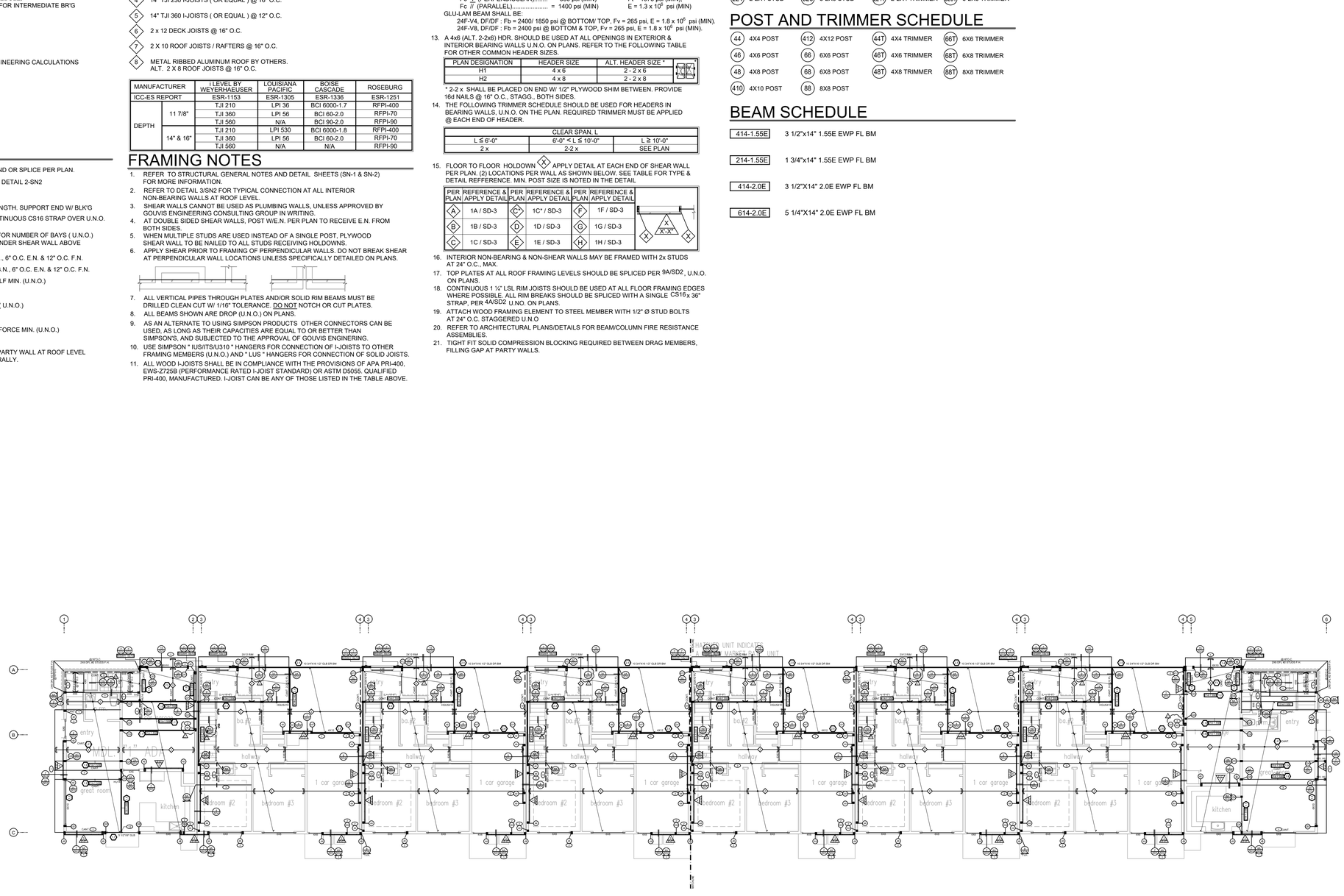

OVERALL FLOOR FRAMING PLAN
BUILDING 2

SCALE : 3/32" = 1'-0"

ISSUED DATE: 5/5/2022

GOUVIS engineering
consulting group, inc.
15 Studebaker
Irvine
CA 92618

Irvine
tel 949.752.1612
fax 949.752.5321

Palm Springs
tel 760.323.5090

REGISTERED PROFESSIONAL ENGINEER
DEBAKORN COSAKUL
No. S 5226
Exp. 6/30/23
STRUCTURAL
STATE OF CALIFORNIA

DATE SIGNED: 2/3/23

RESTRICTIVE NOTICE

THESE DESIGNS, DRAWINGS, AND SPECIFICATIONS ARE THE EXCLUSIVE PROPERTY OF GOUVIS ENGINEERING CONSULTING GROUP. THEY ARE THE SUBJECT OF COPYRIGHT AND OTHER LEGAL PROTECTION. THEY MAY BE USED ONLY BY THEIR INTENDED RECIPIENT AND ONLY FOR THE PROJECT DEPICTED HEREIN. NO PART OF THESE DRAWINGS ARE TO BE COPIED, TRANSFERRED, REPRODUCED, NOR CAN THEY BE USED, IN WHOLE OR IN PART, BY ANY OTHER PERSON OR FOR ANY OTHER PROJECT OR STRUCTURE, WITHOUT THE PRIOR EXPRESS WRITTEN CONSENT OF GOUVIS ENGINEERING CONSULTING GROUP

© 2017 GOUVIS ENGINEERING CONSULTING GROUP INC. - ALL RIGHTS RESERVED

PROJECT:
Tenant Square

DEVELOPER:
Osito Holdings LLC

ARCHITECT:

LOCATION:
Morgan Hill
Santa Clara
CA

REVISIONS

NO.	DATE	DESCRIPTION
1	02/02/23	BLDG DEPT.

SHEET NAME:
OVERALL
FLOOR FRAMING PLAN
BUILDING 2

PROJECT NUMBER:
66074

ENGINEER: GE
DRAFTER: GE

SHEET NUMBER:
S-2.2

SYMBOLS LEGEND

- POST OR TRIMMER AS NOTED
- DIRECTION OF ROOF MEMBER PER SCHEDULE, REFER TO HATCHED WALLS ON PLANS FOR INTERMEDIATE BR'G
- DIRECTION OF FLOOR MEMBER PER SCHEDULE, REFER TO HATCHED WALLS ON PLANS FOR INTERMEDIATE BR'G
- DIRECTION OF DECK MEMBER PER SCHEDULE, REFER TO HATCHED WALLS ON PLANS FOR INTERMEDIATE BR'G
- SHEAR PANEL LENGTH AND NUMBER. REFER TO SN-1 FOR PANEL TYPE
- DETAIL NUMBER / DETAIL SHEET NUMBER
- BEAM NUMBER, REFER TO GOUVIS ENGINEERING CALCULATIONS
- XXX - X.XE: MINIMUM MODULUS OF ELASTICITY (E) / BEAM SIZE, SEE BEAM SCHEDULE
- KEY NOTE NUMBER
- BEARING WALL
- CALIFORNIA FRAMING

KEY NOTES

1. CONTINUOUS 1 1/4" WIDE MIN. LVL / TIMBERSTRAND OR SPLICE PER PLAN.
2. ALIGN POST(S) WITH UPPER FLOOR POST(S), SEE DETAIL 2-SN2
3. CONTINUOUS JOIST W/ E.N.
4. DRAG STRUT W/E.N.. SEE PLANS/DETAILS FOR LENGTH. SUPPORT END W/ BLK'G
5. LINE OF 2X FLAT BLOCKING W/ EDGE NAIL & CONTINUOUS CS16 STRAP OVER U.N.O. SEE PLAN FOR NUMBER OF BAYS.
6. CONTINUOUS FULL HT. BLKG. W/E.N. SEE PLANS FOR NUMBER OF BAYS (U.N.O.)
7. CONTINUOUS LINE OF BLOCKING W/ EDGE NAIL UNDER SHEAR WALL ABOVE W/ (1) CS16, U.N.O.
8. BLOCKED ROOF DIAPHRAGM W/ 8d's @ 4" O.C. B.N., 6" O.C. E.N. & 12" O.C. F.N.
9. BLOCKED FLOOR DIAPHRAGM W/ 10d's @ 4" O.C. B.N., 6" O.C. E.N. & 12" O.C. F.N.
10. SHEAR TRUSS W/E.N. TRUSS TO TRANSFER 180 PLF MIN. (U.N.O.)
11. TRUSS HANGER BY TRUSS SUPPLIER
12. (1) SIMPSON HTS20 FLUSH BEAM TO DROP BEAM (U.N.O.)
13. PROVIDE SOLID BLOCKING
14. DRAG TRUSS W/E.N. TRUSS TO TRANSFER 1700# FORCE MIN. (U.N.O.)
15. BLOCKED OPENING SEE DETAIL 15/SD2
16. CONTINUOUS SHEAR TRUSS W/ E.N OVER EACH PARTY WALL AT ROOF LEVEL DESIGN TRUSS TO TRANSFER 180 PLF MIN. LATERALLY.
17. COUNTERSINK AS REQUIRED NO OVER CUT.

FRAMING SCHEDULE

1. DESIGNED ROOF TRUSSES @ 24" O.C.
2. 14" TJI 210 I-JOISTS (OR EQUAL) @ 19.2" O.C.
3. 14" TJI 210 I-JOISTS (OR EQUAL) @ 16" O.C.
4. 14" TJI 230 I-JOISTS (OR EQUAL) @ 16" O.C.
5. 14" TJI 360 I-JOISTS (OR EQUAL) @ 12" O.C.
6. 2 x 12 DECK JOISTS @ 16" O.C.
7. 2 X 10 ROOF JOISTS / RAFTERS @ 16" O.C.
8. METAL RIBBED ALUMINUM ROOF BY OTHERS. ALT. 2 X 8 ROOF JOISTS @ 16" O.C.

MANUFACTURER		I LEVEL BY WEYERHAEUSER	LOUISIANA PACIFIC	BOISE CASCADE	ROSEBURG
ICC-ES REPORT		ESR-1153	ESR-1305	ESR-1336	ESR-1251
DEPTH	11 7/8"	TJI 210	LPI 36	BCI 6000-1.7	RFPI-400
		TJI 360	LPI 56	BCI 60-2.0	RFPI-70
		TJI 560	N/A	BCI 90-2.0	RFPI-90
	14" & 16"	TJI 210	LPI 530	BCI 6000-1.8	RFPI-400
		TJI 360	LPI 56	BCI 60-2.0	RFPI-70
		TJI 560	N/A	N/A	RFPI-90

FRAMING NOTES

1. REFER TO STRUCTURAL GENERAL NOTES AND DETAIL SHEETS (SN-1 & SN-2) FOR MORE INFORMATION.
2. REFER TO DETAIL 3/SN2 FOR TYPICAL CONNECTION AT ALL INTERIOR NON-BEARING WALLS AT ROOF LEVEL.
3. SHEAR WALLS CANNOT BE USED AS PLUMBING WALLS, UNLESS APPROVED BY GOUVIS ENGINEERING CONSULTING GROUP IN WRITING.
4. AT DOUBLE SIDED SHEAR WALLS, POST W/E.N. PER PLAN TO RECEIVE E.N. FROM BOTH SIDES.
5. WHEN MULTIPLE STUDS ARE USED INSTEAD OF A SINGLE POST, PLYWOOD SHEAR WALL TO BE NAILED TO ALL STUDS RECEIVING HOLDOWNS.
6. APPLY SHEAR PRIOR TO FRAMING OF PERPENDICULAR WALLS. DO NOT BREAK SHEAR AT PERPENDICULAR WALL LOCATIONS UNLESS SPECIFICALLY DETAILED ON PLANS.

7. ALL VERTICAL PIPES THROUGH PLATES AND/OR SOLID RIM BEAMS MUST BE DRILLED CLEAN CUT W/ 1/16" TOLERANCE. DO NOT NOTCH OR CUT PLATES.
8. ALL BEAMS SHOWN ARE DROP (U.N.O.) ON PLANS.
9. AS AN ALTERNATE TO USING SIMPSON PRODUCTS OTHER CONNECTORS CAN BE USED, AS LONG AS THEIR CAPACITIES ARE EQUAL TO OR BETTER THAN SIMPSON'S, AND SUBJECTED TO THE APPROVAL OF GOUVIS ENGINERING.
10. USE SIMPSON " IUS/ITS/U310 " HANGERS FOR CONNECTION OF I-JOISTS TO OTHER FRAMING MEMBERS (U.N.O.) AND " LUS " HANGERS FOR CONNECTION OF SOLID JOISTS.
11. ALL WOOD I-JOISTS SHALL BE IN COMPLIANCE WITH THE PROVISIONS OF APA PRI-400, EWS-Z725B (PERFORMANCE RATED I-JOIST STANDARD) OR ASTM D5055. QUALIFIED PRI-400, MANUFACTURED. I-JOIST CAN BE ANY OF THOSE LISTED IN THE TABLE ABOVE.
12. ENGINEERING WOOD PRODUCTS (EWP) CAN BE FROM ANY MANUFACTURER WITH CURRENT APPROVED ICC ES - EVALUATION REPORT WITH THE FOLLOWING MECHANICAL PROPERTIES:
    Fb = 2800 psi (MIN), Fv = 285 psi (MIN), E = 2.2 x 10^6 psi (MIN).
    Fb = 2800 psi (MIN), Fv = 285 psi (MIN), E = 2.0 x 10^6 psi (MIN).
    Fb = 2325 psi (MIN), Fv = 285 psi (MIN), E = 1.55 x 10^6 psi (MIN).
    Fb = 1700 psi (MIN), Fv = 285 psi (MIN), E = 1.3 x 10^6 psi (MIN).
    FOR MANUFACTURED RIM BOARD WITH MIN 1 1/4" THICK, CONTINUOUSLY SUPPORTED BY WALL, AND MATCHES JOIST DEPTH:
    Fc ⊥ (PERPENDICULAR)..... = 680 psi (MIN) Ft = 1075 psi (MIN),
    Fc // (PARALLEL)..... = 1400 psi (MIN) E = 1.3 x 10^6 psi (MIN)
    GLU-LAM BEAM SHALL BE:
    24F-V4, DF/DF : Fb = 2400/ 1850 psi @ BOTTOM/ TOP, Fv = 265 psi, E = 1.8 x 10^6 psi (MIN).
    24F-V8, DF/DF : Fb = 2400 psi @ BOTTOM & TOP, Fv = 265 psi, E = 1.8 x 10^6 psi (MIN).
13. A 4x6 (ALT. 2-2x6) HDR. SHOULD BE USED AT ALL OPENINGS IN EXTERIOR & INTERIOR BEARING WALLS U.N.O. ON PLANS. REFER TO THE FOLLOWING TABLE FOR OTHER COMMON HEADER SIZES.

PLAN DESIGNATION	HEADER SIZE	ALT. HEADER SIZE *
H1	4 x 6	2 - 2 x 6
H2	4 x 8	2 - 2 x 8

* 2-2 x SHALL BE PLACED ON END W/ 1/2" PLYWOOD SHIM BETWEEN. PROVIDE 16d NAILS @ 16" O.C., STAGG., BOTH SIDES.

14. THE FOLLOWING TRIMMER SCHEDULE SHOULD BE USED FOR HEADERS IN BEARING WALLS, U.N.O. ON THE PLAN. REQUIRED TRIMMER MUST BE APPLIED @ EACH END OF HEADER.

CLEAR SPAN, L		
L ≤ 6'-0"	6'-0" < L ≤ 10'-0"	L ≥ 10'-0"
2 x	2-2 x	SEE PLAN

15. FLOOR TO FLOOR HOLDOWN (X) APPLY DETAIL AT EACH END OF SHEAR WALL PER PLAN. (2) LOCATIONS PER WALL AS SHOWN BELOW. SEE TABLE FOR TYPE & DETAIL REFFERENCE. MIN. POST SIZE IS NOTED IN THE DETAIL

PER PLAN	REFERENCE & APPLY DETAIL	PER PLAN	REFERENCE & APPLY DETAIL	PER PLAN	REFERENCE & APPLY DETAIL
A	1A / SD-3	C*	1C* / SD-3	F	1F / SD-3
B	1B / SD-3	D	1D / SD-3	G	1G / SD-3
C	1C / SD-3	E	1E / SD-3	H	1H / SD-3

16. INTERIOR NON-BEARING & NON-SHEAR WALLS MAY BE FRAMED WITH 2x STUDS AT 24" O.C., MAX.
17. TOP PLATES AT ALL ROOF FRAMING LEVELS SHOULD BE SPLICED PER 9A/SD2, U.N.O. ON PLANS.
18. CONTINUOUS 1 ¾" LSL RIM JOISTS SHOULD BE USED AT ALL FLOOR FRAMING EDGES WHERE POSSIBLE. ALL RIM BREAKS SHOULD BE SPLICED WITH A SINGLE CS16 x 36" STRAP, PER 4A/SD2, U.N.O. ON PLANS.
19. ATTACH WOOD FRAMING ELEMENT TO STEEL MEMBER WITH 1/2" Ø STUD BOLTS AT 24" O.C. STAGGERED U.N.O
20. REFER TO ARCHITECTURAL PLANS/DETAILS FOR BEAM/COLUMN FIRE RESISTANCE ASSEMBLIES.
21. TIGHT FIT SOLID COMPRESSION BLOCKING REQUIRED BETWEEN DRAG MEMBERS, FILLING GAP AT PARTY WALLS.

STUD AND TRIMMER SCHEDULE

(24) 2X4 STUD	(226) 2-2X6 STUD	(24T) 2X4 TRIMMER	(226T) 2-2X6 TRIMMER
(26) 2X6 STUD	(324) 3-2X4 STUD	(26T) 2X6 TRIMMER	(324T) 3-2X4 TRIMMER
(224) 2-2X4 STUD	(326) 3-2X6 STUD	(224T) 2-2X4 TRIMMER	(326T) 3-2X6 TRIMMER

POST AND TRIMMER SCHEDULE

(44) 4X4 POST	(412) 4X12 POST	(44T) 4X4 TRIMMER	(66T) 6X6 TRIMMER
(46) 4X6 POST	(66) 6X6 POST	(46T) 4X6 TRIMMER	(68T) 6X8 TRIMMER
(48) 4X8 POST	(68) 6X8 POST	(48T) 4X8 TRIMMER	(88T) 8X8 TRIMMER
(410) 4X10 POST	(88) 8X8 POST		

BEAM SCHEDULE

414-1.55E	3 1/2"x14" 1.55E EWP FL BM
214-1.55E	1 3/4"x14" 1.55E EWP FL BM
414-2.0E	3 1/2"X14" 2.0E EWP FL BM
614-2.0E	5 1/4"X14" 2.0E EWP FL BM

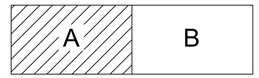

KEYPLAN

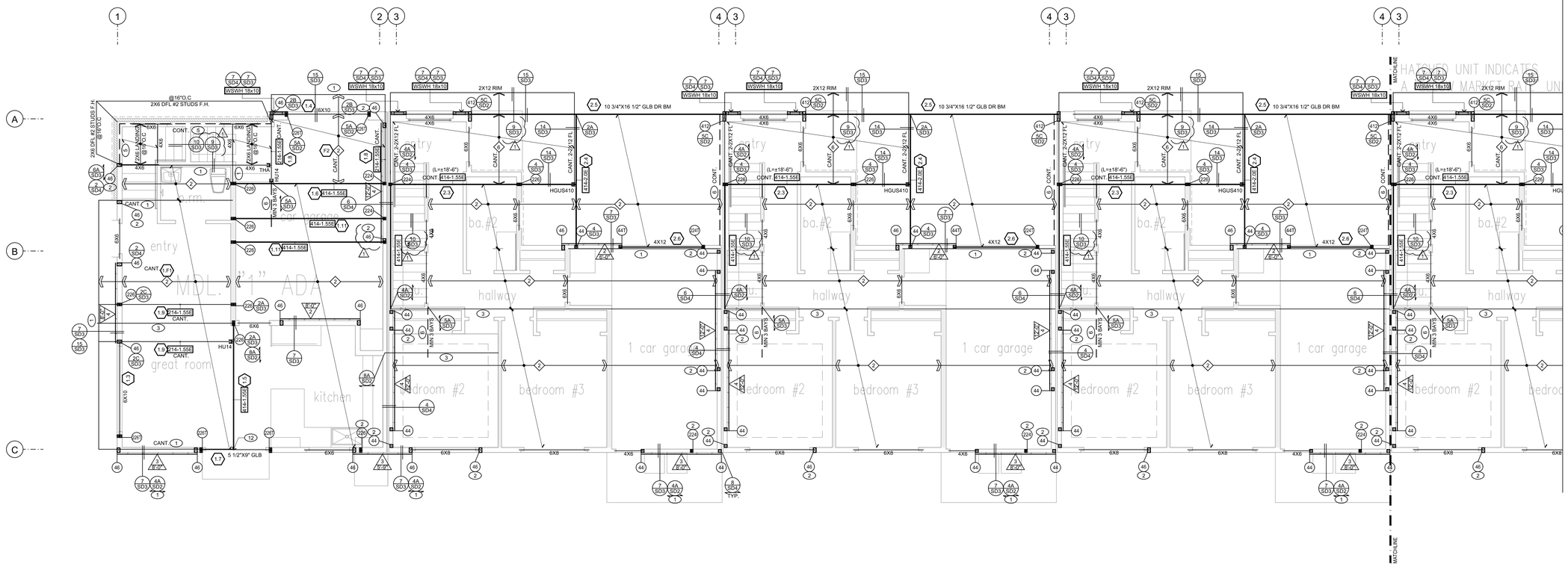

FLOOR FRAMING PLAN
BUILDING 2 - AREA A

SCALE : 3/16" = 1'-0"

ISSUED DATE: 5/5/2022

GOUVIS engineering
consulting group, inc.
15 Studebaker
Irvine
CA 92618

Irvine
tel 949.752.1612
fax 949.752.5321

Palm Springs
tel 760.323.5090

REGISTERED PROFESSIONAL ENGINEER
DRAKAORN CHAKTAIL
No. S 5226
Exp. 6/30/23
STRUCTURAL
STATE OF CALIFORNIA

DATE SIGNED: 2/3/23

RESTRICTIVE NOTICE

THESE DESIGNS, DRAWINGS, AND SPECIFICATIONS ARE THE EXCLUSIVE PROPERTY OF GOUVIS ENGINEERING CONSULTING GROUP. THEY ARE THE SUBJECT OF COPYRIGHT AND OTHER LEGAL PROTECTION. THEY MAY BE USED ONLY BY THEIR INTENDED RECIPIENT AND ONLY FOR THE PROJECT DEPICTED HEREIN. NO PART OF THESE DRAWINGS ARE TO BE COPIED, TRANSFERRED, REPRODUCED, NOR CAN THEY BE USED, IN WHOLE OR IN PART, BY ANY OTHER PERSON OR FOR ANY OTHER PROJECT OR STRUCTURE, WITHOUT THE PRIOR EXPRESS WRITTEN CONSENT OF GOUVIS ENGINEERING CONSULTING GROUP

© 2017 GOUVIS ENGINEERING CONSULTING GROUP INC. - ALL RIGHTS RESERVED

PROJECT:
Tenant Square

DEVELOPER:
Osito Holdings LLC

ARCHITECT:

LOCATION:
Morgan Hill
Santa Clara
CA

REVISIONS

NO.	DATE	DESCRIPTION
1	02/02/23	BLDG DEPT.

SHEET NAME:
FLOOR FRAMING PLAN
BUILDING 2 - AREA A

PROJECT NUMBER:
66074

ENGINEER: GE
DRAFTER: GE

SHEET NUMBER:
S-2.2A

SYMBOLS LEGEND

- POST OR TRIMMER AS NOTED
- DIRECTION OF ROOF MEMBER PER SCHEDULE, REFER TO HATCHED WALLS ON PLANS FOR INTERMEDIATE BR'G
- DIRECTION OF FLOOR MEMBER PER SCHEDULE, REFER TO HATCHED WALLS ON PLANS FOR INTERMEDIATE BR'G
- DIRECTION OF DECK MEMBER PER SCHEDULE, REFER TO HATCHED WALLS ON PLANS FOR INTERMEDIATE BR'G
- SHEAR PANEL LENGTH AND NUMBER. REFER TO SN-1 FOR PANEL TYPE
- DETAIL NUMBER / DETAIL SHEET NUMBER
- BEAM NUMBER, REFER TO GOUVIS ENGINEERING CALCULATIONS
- XXX - X.XE: MINIMUM MODULUS OF ELASTICITY (E) / BEAM SIZE, SEE BEAM SCHEDULE
- KEY NOTE NUMBER
- BEARING WALL
- CALIFORNIA FRAMING

KEY NOTES

1. CONTINUOUS 1 1/4" WIDE MIN. LVL / TIMBERSTRAND OR SPLICE PER PLAN.
2. ALIGN POST(S) WITH UPPER FLOOR POST(S), SEE DETAIL 2-SN2
3. CONTINUOUS JOIST W/ E.N.
4. DRAG STRUT W/E.N.. SEE PLANS/DETAILS FOR LENGTH. SUPPORT END W/ BLK'G
5. LINE OF 2X FLAT BLOCKING W/ EDGE NAIL & CONTINUOUS CS16 STRAP OVER U.N.O. SEE PLAN FOR NUMBER OF BAYS.
6. CONTINUOUS FULL HT. BLKG. W/E.N. SEE PLANS FOR NUMBER OF BAYS (U.N.O.)
7. CONTINUOUS LINE OF BLOCKING W/ EDGE NAIL UNDER SHEAR WALL ABOVE W/ (1) CS16, U.N.O.
8. BLOCKED ROOF DIAPHRAGM W/ 8d's @ 4" O.C. B.N., 6" O.C. E.N. & 12" O.C. F.N.
9. BLOCKED FLOOR DIAPHRAGM W/ 10d's @ 4" O.C. B.N., 6" O.C. E.N. & 12" O.C. F.N.
10. SHEAR TRUSS W/E.N. TRUSS TO TRANSFER 180 PLF MIN. (U.N.O.)
11. TRUSS HANGER BY TRUSS SUPPLIER
12. (1) SIMPSON HTS20 FLUSH BEAM TO DROP BEAM (U.N.O.)
13. PROVIDE SOLID BLOCKING
14. DRAG TRUSS W/E.N. TRUSS TO TRANSFER 1700# FORCE MIN. (U.N.O.)
15. BLOCKED OPENING SEE DETAIL 15/SD2
16. CONTINUOUS SHEAR TRUSS W/ E.N OVER EACH PARTY WALL AT ROOF LEVEL DESIGN TRUSS TO TRANSFER 180 PLF MIN. LATERALLY.
17. COUNTERSINK AS REQUIRED NO OVER CUT.

FRAMING SCHEDULE

1. DESIGNED ROOF TRUSSES @ 24" O.C.
2. 14" TJI 210 I-JOISTS (OR EQUAL) @ 19.2" O.C.
3. 14" TJI 210 I-JOISTS (OR EQUAL) @ 16" O.C.
4. 14" TJI 230 I-JOISTS (OR EQUAL) @ 16" O.C.
5. 14" TJI 360 I-JOISTS (OR EQUAL) @ 12" O.C.
6. 2 x 12 DECK JOISTS @ 16" O.C.
7. 2 X 10 ROOF JOISTS / RAFTERS @ 16" O.C.
8. METAL RIBBED ALUMINUM ROOF BY OTHERS. ALT. 2 X 8 ROOF JOISTS @ 16" O.C.

MANUFACTURER		I LEVEL BY WEYERHAEUSER	LOUISIANA PACIFIC	BOISE CASCADE	ROSEBURG
ICC-ES REPORT		ESR-1153	ESR-1305	ESR-1336	ESR-1251
DEPTH	11 7/8"	TJI 210	LPI 36	BCI 6000-1.7	RFPI-400
		TJI 360	LPI 56	BCI 60-2.0	RFPI-70
		TJI 560	N/A	BCI 90-2.0	RFPI-90
	14" & 16"	TJI 210	LPI 530	BCI 6000-1.8	RFPI-400
		TJI 360	LPI 56	BCI 60-2.0	RFPI-70
		TJI 560	N/A	N/A	RFPI-90

FRAMING NOTES

1. REFER TO STRUCTURAL GENERAL NOTES AND DETAIL SHEETS (SN-1 & SN-2) FOR MORE INFORMATION.
2. REFER TO DETAIL 3/SN2 FOR TYPICAL CONNECTION AT ALL INTERIOR NON-BEARING WALLS AT ROOF LEVEL.
3. SHEAR WALLS CANNOT BE USED AS PLUMBING WALLS, UNLESS APPROVED BY GOUVIS ENGINEERING CONSULTING GROUP IN WRITING.
4. AT DOUBLE SIDED SHEAR WALLS, POST W/E.N. PER PLAN TO RECEIVE E.N. FROM BOTH SIDES.
5. WHEN MULTIPLE STUDS ARE USED INSTEAD OF A SINGLE POST, PLYWOOD SHEAR WALL TO BE NAILED TO ALL STUDS RECEIVING HOLDOWNS.
6. APPLY SHEAR PRIOR TO FRAMING OF PERPPENDICULAR WALLS. DO NOT BREAK SHEAR AT PERPENDICULAR WALL LOCATIONS UNLESS SPECIFICALLY DETAILED ON PLANS.

7. ALL VERTICAL PIPES THROUGH PLATES AND/OR SOLID RIM BEAMS MUST BE DRILLED CLEAN CUT W/ 1/16" TOLERANCE. DO NOT NOTCH OR CUT PLATES.
8. ALL BEAMS SHOWN ARE DROP (U.N.O.) ON PLANS.
9. AS AN ALTERNATE TO USING SIMPSON PRODUCTS OTHER CONNECTORS CAN BE USED, AS LONG AS THEIR CAPACITIES ARE EQUAL TO OR BETTER THAN SIMPSON'S, AND SUBJECTED TO THE APPROVAL OF GOUVIS ENGINERING.
10. USE SIMPSON " IUS/ITS/U310 " HANGERS FOR CONNECTION OF I-JOISTS TO OTHER FRAMING MEMBERS (U.N.O.) AND " LUS " HANGERS FOR CONNECTION OF SOLID JOISTS.
11. ALL WOOD I-JOISTS SHALL BE IN COMPLIANCE WITH THE PROVISIONS OF APA PRI-400, EWS-Z725B (PERFORMANCE RATED I-JOIST STANDARD) OR ASTM D5055. QUALIFIED PRI-400, MANUFACTURED. I-JOIST CAN BE ANY OF THOSE LISTED IN THE TABLE ABOVE.
12. ENGINEERING WOOD PRODUCTS (EWP) CAN BE FROM ANY MANUFACTURER WITH CURRENT APPROVED ICC ES - EVALUATION REPORT WITH THE FOLLOWING MECHANICAL PROPERTIES:
    Fb = 2800 psi (MIN), Fv = 285 psi (MIN), E = 2.2 x 10^6 psi (MIN).
    Fb = 2800 psi (MIN), Fv = 285 psi (MIN), E = 2.0 x 10^6 psi (MIN).
    Fb = 2325 psi (MIN), Fv = 285 psi (MIN), E = 1.55 x 10^6 psi (MIN).
    Fb = 1700 psi (MIN), Fv = 285 psi (MIN), E = 1.3 x 10^6 psi (MIN).
    FOR MANUFACTURED RIM BOARD WITH MIN 1 1/4" THICK, CONTINUOUSLY SUPPORTED BY WALL, AND MATCHES JOIST DEPTH:
    Fc _|_ (PERPENDICULAR)..... = 680 psi (MIN) Ft = 1075 psi (MIN),
    Fc // (PARALLEL)..... = 1400 psi (MIN) E = 1.3 x 10^6 psi (MIN)
    GLU-LAM BEAM SHALL BE:
    24F-V4, DF/DF : Fb = 2400/ 1850 psi @ BOTTOM/ TOP, Fv = 265 psi, E = 1.8 x 10^6 psi (MIN).
    24F-V8, DF/DF : Fb = 2400 psi @ BOTTOM & TOP, Fv = 265 psi, E = 1.8 x 10^6 psi (MIN).
13. A 4x6 (ALT. 2-2x6) HDR. SHOULD BE USED AT ALL OPENINGS IN EXTERIOR & INTERIOR BEARING WALLS U.N.O. ON PLANS. REFER TO THE FOLLOWING TABLE FOR OTHER COMMON HEADER SIZES.

PLAN DESIGNATION	HEADER SIZE	ALT. HEADER SIZE *
H1	4 x 6	2 - 2 x 6
H2	4 x 8	2 - 2 x 8

* 2-2 x SHALL BE PLACED ON END W/ 1/2" PLYWOOD SHIM BETWEEN. PROVIDE 16d NAILS @ 16" O.C., STAGG., BOTH SIDES.

14. THE FOLLOWING TRIMMER SCHEDULE SHOULD BE USED FOR HEADERS IN BEARING WALLS, U.N.O. ON THE PLAN. REQUIRED TRIMMER MUST BE APPLIED @ EACH END OF HEADER.

CLEAR SPAN, L		
L ≤ 6'-0"	6'-0" < L ≤ 10'-0"	L ≥ 10'-0"
2 x	2-2 x	SEE PLAN

15. FLOOR TO FLOOR HOLDOWN (H) APPLY DETAIL AT EACH END OF SHEAR WALL PER PLAN. (2) LOCATIONS PER WALL AS SHOWN BELOW. SEE TABLE FOR TYPE & DETAIL REFFERENCE. MIN. POST SIZE IS NOTED IN THE DETAIL

PER PLAN	REFERENCE & APPLY DETAIL	PER PLAN	REFERENCE & APPLY DETAIL	PER PLAN	REFERENCE & APPLY DETAIL
A	1A / SD-3	C*	1C* / SD-3	F	1F / SD-3
B	1B / SD-3	D	1D / SD-3	G	1G / SD-3
C	1C / SD-3	E	1E / SD-3	H	1H / SD-3

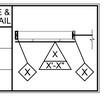

16. INTERIOR NON-BEARING & NON-SHEAR WALLS MAY BE FRAMED WITH 2x STUDS AT 24" O.C., MAX.
17. TOP PLATES AT ALL ROOF FRAMING LEVELS SHOULD BE SPLICED PER 9A/SD2, U.N.O. ON PLANS.
18. CONTINUOUS 1 ¼" LSL RIM JOISTS SHOULD BE USED AT ALL FLOOR FRAMING EDGES WHERE POSSIBLE. ALL RIM BREAKS SHOULD BE SPLICED WITH A SINGLE CS16 x 36" STRAP, PER 4A/SD2, U.N.O. ON PLANS.
19. ATTACH WOOD FRAMING ELEMENT TO STEEL MEMBER WITH 1/2" Ø STUD BOLTS AT 24" O.C. STAGGERED U.N.O
20. REFER TO ARCHITECTURAL PLANS/DETAILS FOR BEAM/COLUMN FIRE RESISTANCE ASSEMBLIES.
21. TIGHT FIT SOLID COMPRESSION BLOCKING REQUIRED BETWEEN DRAG MEMBERS, FILLING GAP AT PARTY WALLS.

STUD AND TRIMMER SCHEDULE

24 2X4 STUD	226 2-2X6 STUD	24T 2X4 TRIMMER	226T 2-2X6 TRIMMER
26 2X6 STUD	324 3-2X4 STUD	26T 2X6 TRIMMER	324T 3-2X4 TRIMMER
224 2-2X4 STUD	326 3-2X6 STUD	224T 2-2X4 TRIMMER	326T 3-2X6 TRIMMER

POST AND TRIMMER SCHEDULE

44 4X4 POST	412 4X12 POST	44T 4X4 TRIMMER	66T 6X6 TRIMMER
46 4X6 POST	66 6X6 POST	46T 4X6 TRIMMER	68T 6X8 TRIMMER
48 4X8 POST	68 6X8 POST	48T 4X8 TRIMMER	88T 8X8 TRIMMER
410 4X10 POST	88 8X8 POST		

BEAM SCHEDULE

414-1.55E	3 1/2"x14" 1.55E EWP FL BM
214-1.55E	1 3/4"x14" 1.55E EWP FL BM
414-2.0E	3 1/2"X14" 2.0E EWP FL BM
614-2.0E	5 1/4"X14" 2.0E EWP FL BM

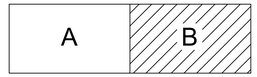

KEYPLAN

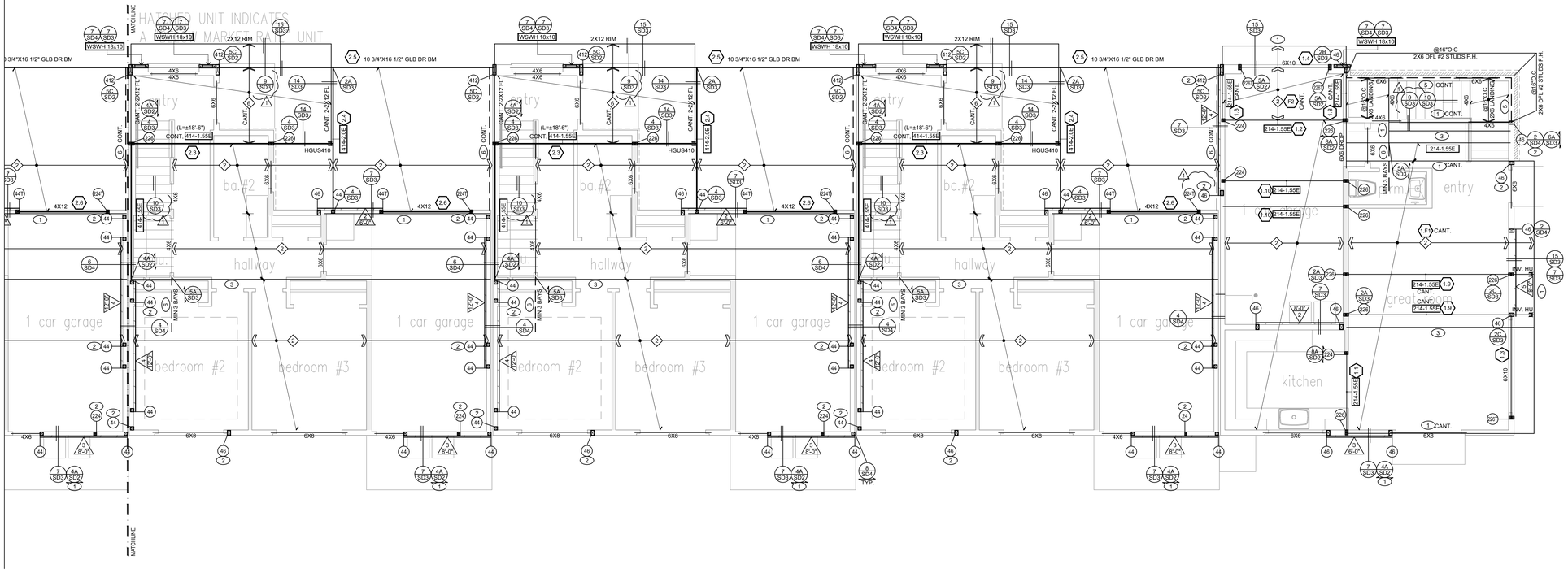

FLOOR FRAMING PLAN
BUILDING 2 - AREA B

SCALE : 3/16" = 1'-0"

ISSUED DATE: 5/5/2022

GOUVIS engineering consulting group, inc.
15 Studebaker
Irvine
CA 92618

Irvine
tel 949.752.1612
fax 949.752.5321

Palm Springs
tel 760.323.5090

REGISTERED PROFESSIONAL ENGINEER DIBAKORN CHAKRIT No. S 5226 Exp. 6/30/23 STRUCTURAL STATE OF CALIFORNIA

DATE SIGNED: 2/3/23

RESTRICTIVE NOTICE

THESE DESIGNS, DRAWINGS, AND SPECIFICATIONS ARE THE EXCLUSIVE PROPERTY OF GOUVIS ENGINEERING CONSULTING GROUP. THEY ARE THE SUBJECT OF COPYRIGHT AND OTHER LEGAL PROTECTION. THEY MAY BE USED ONLY BY THEIR INTENDED RECIPIENT AND ONLY FOR THE PROJECT DEPICTED HEREIN. NO PART OF THESE DRAWINGS ARE TO BE COPIED, TRANSFERRED, REPRODUCED, NOR CAN THEY BE USED, IN WHOLE OR IN PART, BY ANY OTHER PERSON OR FOR ANY OTHER PROJECT OR STRUCTURE, WITHOUT THE PRIOR EXPRESS WRITTEN CONSENT OF GOUVIS ENGINEERING CONSULTING GROUP

© 2017 GOUVIS ENGINEERING CONSULTING GROUP INC. - ALL RIGHTS RESERVED

PROJECT:
Tenant Square

DEVELOPER:
Osito Holdings LLC

ARCHITECT:

LOCATION:
Morgan Hill
Santa Clara
CA

REVISIONS

NO.	DATE	DESCRIPTION
1	02/02/23	BLDG DEPT.

SHEET NAME:
FLOOR FRAMING PLAN
BUILDING 2 - AREA B

PROJECT NUMBER:
66074

ENGINEER: GE
DRAFTER: GE

SHEET NUMBER:
S-2.2B

SYMBOLS LEGEND

- POST OR TRIMMER AS NOTED
- DIRECTION OF ROOF MEMBER PER SCHEDULE, REFER TO HATCHED WALLS ON PLANS FOR INTERMEDIATE BR'G
- DIRECTION OF FLOOR MEMBER PER SCHEDULE, REFER TO HATCHED WALLS ON PLANS FOR INTERMEDIATE BR'G
- DIRECTION OF DECK MEMBER PER SCHEDULE, REFER TO HATCHED WALLS ON PLANS FOR INTERMEDIATE BR'G
- SHEAR PANEL LENGTH AND NUMBER. REFER TO SN-1 FOR PANEL TYPE
- DETAIL NUMBER / DETAIL SHEET NUMBER
- BEAM NUMBER, REFER TO GOUVIS ENGINEERING CALCULATIONS
- XXX - X.XE: MINIMUM MODULUS OF ELASTICITY (E) / BEAM SIZE, SEE BEAM SCHEDULE
- KEY NOTE NUMBER
- BEARING WALL
- CALIFORNIA FRAMING

KEY NOTES

1. CONTINUOUS 1 1/4" WIDE MIN. LVL / TIMBERSTRAND OR SPLICE PER PLAN.
2. ALIGN POST(S) WITH UPPER FLOOR POST(S), SEE DETAIL 2-SN2
3. CONTINUOUS JOIST W/ E.N.
4. DRAG STRUT W/E.N.. SEE PLANS/DETAILS FOR LENGTH. SUPPORT END W/ BLK'G
5. LINE OF 2X FLAT BLOCKING W/ EDGE NAIL & CONTINUOUS CS16 STRAP OVER U.N.O. SEE PLAN FOR NUMBER OF BAYS.
6. CONTINUOUS FULL HT. BLKG. W/E.N. SEE PLANS FOR NUMBER OF BAYS (U.N.O.)
7. CONTINUOUS LINE OF BLOCKING W/ EDGE NAIL UNDER SHEAR WALL ABOVE W/ (1) CS16, U.N.O.
8. BLOCKED ROOF DIAPHRAGM W/ 8d's @ 4" O.C. B.N., 6" O.C. E.N. & 12" O.C. F.N.
9. BLOCKED FLOOR DIAPHRAGM W/ 10d's @ 4" O.C. B.N., 6" O.C. E.N. & 12" O.C. F.N.
10. SHEAR TRUSS W/E.N. TRUSS TO TRANSFER 180 PLF MIN. (U.N.O.)
11. TRUSS HANGER BY TRUSS SUPPLIER
12. (1) SIMPSON HTS20 FLUSH BEAM TO DROP BEAM (U.N.O.)
13. PROVIDE SOLID BLOCKING
14. DRAG TRUSS W/E.N. TRUSS TO TRANSFER 1700# FORCE MIN. (U.N.O.)
15. BLOCKED OPENING SEE DETAIL 15/SD2
16. CONTINUOUS SHEAR TRUSS W/ E.N OVER EACH PARTY WALL AT ROOF LEVEL DESIGN TRUSS TO TRANSFER 180 PLF MIN. LATERALLY.
17. COUNTERSINK AS REQUIRED NO OVER CUT.

FRAMING SCHEDULE

1. DESIGNED ROOF TRUSSES @ 24" O.C.
2. 14" TJI 210 I-JOISTS (OR EQUAL) @ 19.2" O.C.
3. 14" TJI 210 I-JOISTS (OR EQUAL) @ 16" O.C.
4. 14" TJI 230 I-JOISTS (OR EQUAL) @ 16" O.C.
5. 14" TJI 360 I-JOISTS (OR EQUAL) @ 12" O.C.
6. 2 x 12 DECK JOISTS @ 16" O.C.
7. 2 X 10 ROOF JOISTS / RAFTERS @ 16" O.C.
8. METAL RIBBED ALUMINUM ROOF BY OTHERS. ALT. 2 X 8 ROOF JOISTS @ 16" O.C.

MANUFACTURER		I LEVEL BY WEYERHAEUSER	LOUISIANA PACIFIC	BOISE CASCADE	ROSEBURG
ICC-ES REPORT		ESR-1153	ESR-1305	ESR-1336	ESR-1251
DEPTH	11 7/8"	TJI 210	LPI 36	BCI 6000-1.7	RFPI-400
		TJI 360	LPI 56	BCI 60-2.0	RFPI-70
		TJI 560	N/A	BCI 90-2.0	RFPI-90
	14" & 16"	TJI 210	LPI 530	BCI 6000-1.8	RFPI-400
		TJI 360	LPI 56	BCI 60-2.0	RFPI-70
		TJI 560	N/A	N/A	RFPI-90

FRAMING NOTES

1. REFER TO STRUCTURAL GENERAL NOTES AND DETAIL SHEETS (SN-1 & SN-2) FOR MORE INFORMATION.
2. REFER TO DETAIL 3/SN2 FOR TYPICAL CONNECTION AT ALL INTERIOR NON-BEARING WALLS AT ROOF LEVEL.
3. SHEAR WALLS CANNOT BE USED AS PLUMBING WALLS, UNLESS APPROVED BY GOUVIS ENGINEERING CONSULTING GROUP IN WRITING.
4. AT DOUBLE SIDED SHEAR WALLS, POST W/E.N. PER PLAN TO RECEIVE E.N. FROM BOTH SIDES.
5. WHEN MULTIPLE STUDS ARE USED INSTEAD OF A SINGLE POST, PLYWOOD SHEAR WALL TO BE NAILED TO ALL STUDS RECEIVING HOLDOWNS.
6. APPLY SHEAR PRIOR TO FRAMING OF PERPPENDICULAR WALLS. DO NOT BREAK SHEAR AT PERPENDICULAR WALL LOCATIONS UNLESS SPECIFICALLY DETAILED ON PLANS.

7. ALL VERTICAL PIPES THROUGH PLATES AND/OR SOLID RIM BEAMS MUST BE DRILLED CLEAN CUT W/ 1/16" TOLERANCE. DO NOT NOTCH OR CUT PLATES.
8. ALL BEAMS SHOWN ARE DROP (U.N.O.) ON PLANS.
9. AS AN ALTERNATE TO USING SIMPSON PRODUCTS OTHER CONNECTORS CAN BE USED, AS LONG AS THEIR CAPACITIES ARE EQUAL TO OR BETTER THAN SIMPSON'S, AND SUBJECTED TO THE APPROVAL OF GOUVIS ENGINERING.
10. USE SIMPSON " IUS/ITS/U310 " HANGERS FOR CONNECTION OF I-JOISTS TO OTHER FRAMING MEMBERS (U.N.O.) AND " LUS " HANGERS FOR CONNECTION OF SOLID JOISTS.
11. ALL WOOD I-JOISTS SHALL BE IN COMPLIANCE WITH THE PROVISIONS OF APA PRI-400, EWS-Z725B (PERFORMANCE RATED I-JOIST STANDARD) OR ASTM D5055. QUALIFIED PRI-400, MANUFACTURED. I-JOIST CAN BE ANY OF THOSE LISTED IN THE TABLE ABOVE.
12. ENGINEERING WOOD PRODUCTS (EWP) CAN BE FROM ANY MANUFACTURER WITH CURRENT APPROVED ICC ES - EVALUATION REPORT WITH THE FOLLOWING MECHANICAL PROPERTIES:
    Fb = 2800 psi (MIN), Fv = 285 psi (MIN), E = 2.2 x 10^6 psi (MIN).
    Fb = 2800 psi (MIN), Fv = 285 psi (MIN), E = 2.0 x 10^6 psi (MIN).
    Fb = 2325 psi (MIN), Fv = 285 psi (MIN), E = 1.55 x 10^6 psi (MIN).
    Fb = 1700 psi (MIN), Fv = 285 psi (MIN), E = 1.3 x 10^6 psi (MIN).
    FOR MANUFACTURED RIM BOARD WITH MIN 1 1/4" THICK, CONTINUOUSLY SUPPORTED BY WALL AND MATCHES JOIST DEPTH:
    Fc ⊥ (PERPENDICULAR)..... = 680 psi (MIN) Ft = 1075 psi (MIN),
    Fc // (PARALLEL)..... = 1400 psi (MIN) E = 1.3 x 10^6 psi (MIN)
    GLU-LAM BEAM SHALL BE:
    24F-V4, DF/DF : Fb = 2400/ 1850 psi @ BOTTOM/ TOP, Fv = 265 psi, E = 1.8 x 10^6 psi (MIN).
    24F-V8, DF/DF : Fb = 2400 psi @ BOTTOM & TOP, Fv = 265 psi, E = 1.8 x 10^6 psi (MIN).
13. A 4x6 (ALT. 2-2x6) HDR. SHOULD BE USED AT ALL OPENINGS IN EXTERIOR & INTERIOR BEARING WALLS U.N.O. ON PLANS. REFER TO THE FOLLOWING TABLE FOR OTHER COMMON HEADER SIZES.

PLAN DESIGNATION	HEADER SIZE	ALT. HEADER SIZE *
H1	4 x 6	2 - 2 x 6
H2	4 x 8	2 - 2 x 8

* 2-2 x SHALL BE PLACED ON END W/ 1/2" PLYWOOD SHIM BETWEEN. PROVIDE 16d NAILS @ 16" O.C., STAGG., BOTH SIDES.

14. THE FOLLOWING TRIMMER SCHEDULE SHOULD BE USED FOR HEADERS IN BEARING WALLS, U.N.O. ON THE PLAN. REQUIRED TRIMMER MUST BE APPLIED @ EACH END OF HEADER.

CLEAR SPAN, L		
L ≤ 6'-0"	6'-0" < L ≤ 10'-0"	L ≥ 10'-0"
2 x	2-2 x	SEE PLAN

15. FLOOR TO FLOOR HOLDOWN (H) APPLY DETAIL AT EACH END OF SHEAR WALL PER PLAN. (2) LOCATIONS PER WALL AS SHOWN BELOW. SEE TABLE FOR TYPE & DETAIL REFFERENCE. MIN. POST SIZE IS NOTED IN THE DETAIL

PER PLAN	REFERENCE & APPLY DETAIL	PER PLAN	REFERENCE & APPLY DETAIL	PER PLAN	REFERENCE & APPLY DETAIL
A	1A / SD-3	C*	1C* / SD-3	F	1F / SD-3
B	1B / SD-3	D	1D / SD-3	G	1G / SD-3
C	1C / SD-3	E	1E / SD-3	H	1H / SD-3

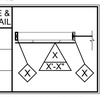

16. INTERIOR NON-BEARING & NON-SHEAR WALLS MAY BE FRAMED WITH 2x STUDS AT 24" O.C., MAX.
17. TOP PLATES AT ALL ROOF FRAMING LEVELS SHOULD BE SPLICED PER 9A/SD2, U.N.O. ON PLANS.
18. CONTINUOUS 1 ½" LSL RIM JOISTS SHOULD BE USED AT ALL FLOOR FRAMING EDGES WHERE POSSIBLE. ALL RIM BREAKS SHOULD BE SPLICED WITH A SINGLE CS16 x 36" STRAP, PER 4A/SD2 U.NO. ON PLANS.
19. ATTACH WOOD FRAMING ELEMENT TO STEEL MEMBER WITH 1/2" Ø STUD BOLTS AT 24" O.C. STAGGERED U.N.O
20. REFER TO ARCHITECTURAL PLANS/DETAILS FOR BEAM/COLUMN FIRE RESISTANCE ASSEMBLIES.
21. TIGHT FIT SOLID COMPRESSION BLOCKING REQUIRED BETWEEN DRAG MEMBERS, FILLING GAP AT PARTY WALLS.

STUD AND TRIMMER SCHEDULE

24	2X4 STUD	226	2-2X6 STUD	24T	2X4 TRIMMER	26T	2-2X6 TRIMMER
26	2X6 STUD	324	3-2X4 STUD	26T	2X6 TRIMMER	24T	3-2X4 TRIMMER
224	2-2X4 STUD	326	3-2X6 STUD	24T	2-2X4 TRIMMER	26T	3-2X6 TRIMMER

POST AND TRIMMER SCHEDULE

44	4X4 POST	412	4X12 POST	44T	4X4 TRIMMER	66T	6X6 TRIMMER
46	4X6 POST	66	6X6 POST	46T	4X6 TRIMMER	68T	6X8 TRIMMER
48	4X8 POST	68	6X8 POST	48T	4X8 TRIMMER	68T	8X8 TRIMMER
410	4X10 POST	88	8X8 POST				

BEAM SCHEDULE

414-1.55E	3 1/2"x14" 1.55E EWP FL BM
214-1.55E	1 3/4"x14" 1.55E EWP FL BM
414-2.0E	3 1/2"X14" 2.0E EWP FL BM
614-2.0E	5 1/4"X14" 2.0E EWP FL BM

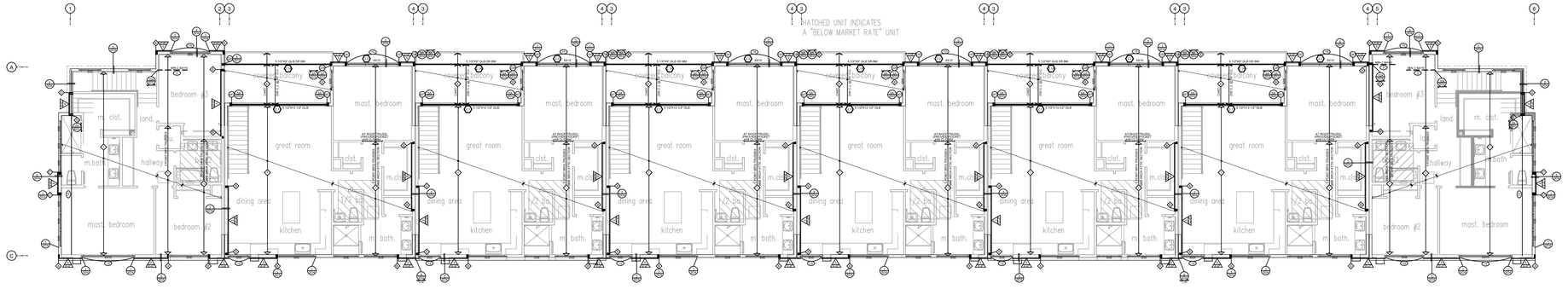

OVERALL ROOF FRAMING PLAN
BUILDING 2

SCALE : 3/32" = 1'-0"

ISSUED DATE: 5/5/2022

GOUVIS engineering
consulting group, inc.
15 Studebaker
Irvine
CA 92618

Irvine
tel 949.752.1612
fax 949.752.5321

Palm Springs
tel 760.323.5090

REGISTERED PROFESSIONAL ENGINEER
DIRAKORN COMATUL
No. S 5226
Exp. 6/30/23
STRUCTURAL
STATE OF CALIFORNIA

DATE SIGNED: 2/3/23

RESTRICTIVE NOTICE

THESE DESIGNS, DRAWINGS, AND SPECIFICATIONS ARE THE EXCLUSIVE PROPERTY OF GOUVIS ENGINEERING CONSULTING GROUP. THEY ARE THE SUBJECT OF COPYRIGHT AND OTHER LEGAL PROTECTION. THEY MAY BE USED ONLY BY THEIR INTENDED RECIPIENT AND ONLY FOR THE PROJECT DEPICTED HEREIN. NO PART OF THESE DRAWINGS ARE TO BE COPIED, TRANSFERRED, REPRODUCED, NOR CAN THEY BE USED, IN WHOLE OR IN PART, BY ANY OTHER PERSON OR FOR ANY OTHER PROJECT OR STRUCTURE, WITHOUT THE PRIOR EXPRESS WRITTEN CONSENT OF GOUVIS ENGINEERING CONSULTING GROUP

© 2017 GOUVIS ENGINEERING CONSULTING GROUP INC. - ALL RIGHTS RESERVED

PROJECT:
Tenant Square

DEVELOPER:
Osito Holdings LLC

ARCHITECT:

LOCATION:
Morgan Hill
Santa Clara
CA

REVISIONS

NO.	DATE	DESCRIPTION
1	02/02/23	BLDG DEPT.

SHEET NAME:
OVERALL
ROOF FRAMING PLAN
BUILDING 2

PROJECT NUMBER:
66074

ENGINEER: GE
DRAFTER: GE

SHEET NUMBER:
S-2.3

SYMBOLS LEGEND

- POST OR TRIMMER AS NOTED
- DIRECTION OF ROOF MEMBER PER SCHEDULE, REFER TO HATCHED WALLS ON PLANS FOR INTERMEDIATE BR'G
- DIRECTION OF FLOOR MEMBER PER SCHEDULE, REFER TO HATCHED WALLS ON PLANS FOR INTERMEDIATE BR'G
- DIRECTION OF DECK MEMBER PER SCHEDULE, REFER TO HATCHED WALLS ON PLANS FOR INTERMEDIATE BR'G
- SHEAR PANEL LENGTH AND NUMBER. REFER TO SN-1 FOR PANEL TYPE
- DETAIL NUMBER / DETAIL SHEET NUMBER
- BEAM NUMBER, REFER TO GOUVIS ENGINEERING CALCULATIONS
- XXX - X.XE: MINIMUM MODULUS OF ELASTICITY (E) / BEAM SIZE, SEE BEAM SCHEDULE
- KEY NOTE NUMBER
- BEARING WALL
- CALIFORNIA FRAMING

KEY NOTES

1. CONTINUOUS 1 1/4" WIDE MIN. LVL / TIMBERSTRAND OR SPLICE PER PLAN.
2. ALIGN POST(S) WITH UPPER FLOOR POST(S), SEE DETAIL 2-SN2
3. CONTINUOUS JOIST W/ E.N.
4. DRAG STRUT W/E.N., SEE PLANS/DETAILS FOR LENGTH. SUPPORT END W/ BLK'G
5. LINE OF 2X FLAT BLOCKING W/ EDGE NAIL & CONTINUOUS CS16 STRAP OVER U.N.O. SEE PLAN FOR NUMBER OF BAYS.
6. CONTINUOUS FULL HT. BLKG. W/E.N. SEE PLANS FOR NUMBER OF BAYS (U.N.O.)
7. CONTINUOUS LINE OF BLOCKING W/ EDGE NAIL UNDER SHEAR WALL ABOVE W/ (1) CS16, U.N.O.
8. BLOCKED ROOF DIAPHRAGM W/ 8d's @ 4" O.C. B.N., 6" O.C. E.N. & 12" O.C. F.N.
9. BLOCKED FLOOR DIAPHRAGM W/ 10d's @ 4" O.C. B.N., 6" O.C. E.N. & 12" O.C. F.N.
10. SHEAR TRUSS W/E.N. TRUSS TO TRANSFER 180 PLF MIN. (U.N.O.)
11. TRUSS HANGER BY TRUSS SUPPLIER
12. (1) SIMPSON HTS20 FLUSH BEAM TO DROP BEAM (U.N.O.)
13. PROVIDE SOLID BLOCKING
14. DRAG TRUSS W/E.N. TRUSS TO TRANSFER 1700# FORCE MIN. (U.N.O.)
15. BLOCKED OPENING SEE DETAIL 15/SD2
16. CONTINUOUS SHEAR TRUSS W/ E.N OVER EACH PARTY WALL AT ROOF LEVEL DESIGN TRUSS TO TRANSFER 180 PLF MIN. LATERALLY.
17. COUNTERSINK AS REQUIRED NO OVER CUT.

FRAMING SCHEDULE

1. DESIGNED ROOF TRUSSES @ 24" O.C.
2. 14" TJI 210 I-JOISTS (OR EQUAL) @ 19.2" O.C.
3. 14" TJI 210 I-JOISTS (OR EQUAL) @ 16" O.C.
4. 14" TJI 230 I-JOISTS (OR EQUAL) @ 16" O.C.
5. 14" TJI 360 I-JOISTS (OR EQUAL) @ 12" O.C.
6. 2 x 12 DECK JOISTS @ 16" O.C.
7. 2 X 10 ROOF JOISTS / RAFTERS @ 16" O.C.
8. METAL RIBBED ALUMINUM ROOF BY OTHERS. ALT. 2 X 8 ROOF JOISTS @ 16" O.C.

MANUFACTURER		I LEVEL BY WEYERHAEUSER	LOUISIANA PACIFIC	BOISE CASCADE	ROSEBURG
ICC-ES REPORT		ESR-1153	ESR-1305	ESR-1336	ESR-1251
DEPTH	11 7/8"	TJI 210	LPI 36	BCI 6000-1.7	RFPI-400
		TJI 360	LPI 56	BCI 60-2.0	RFPI-70
		TJI 560	N/A	BCI 90-2.0	RFPI-90
	14" & 16"	TJI 210	LPI 530	BCI 6000-1.8	RFPI-400
		TJI 360	LPI 56	BCI 60-2.0	RFPI-70
		TJI 560	N/A	N/A	RFPI-90

FRAMING NOTES

1. REFER TO STRUCTURAL GENERAL NOTES AND DETAIL SHEETS (SN-1 & SN-2) FOR MORE INFORMATION.
2. REFER TO DETAIL 3/SN2 FOR TYPICAL CONNECTION AT ALL INTERIOR NON-BEARING WALLS AT ROOF LEVEL.
3. SHEAR WALLS CANNOT BE USED AS PLUMBING WALLS, UNLESS APPROVED BY GOUVIS ENGINEERING CONSULTING GROUP IN WRITING.
4. AT DOUBLE SIDED SHEAR WALLS, POST W/E.N. PER PLAN TO RECEIVE E.N. FROM BOTH SIDES.
5. WHEN MULTIPLE STUDS ARE USED INSTEAD OF A SINGLE POST, PLYWOOD SHEAR WALL TO BE NAILED TO ALL STUDS RECEIVING HOLDOWNS.
6. APPLY SHEAR PRIOR TO FRAMING OF PERPENDICULAR WALLS. DO NOT BREAK SHEAR AT PERPENDICULAR WALL LOCATIONS UNLESS SPECIFICALLY DETAILED ON PLANS.

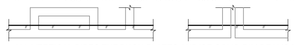

7. ALL VERTICAL PIPES THROUGH PLATES AND/OR SOLID RIM BEAMS MUST BE DRILLED CLEAN CUT W/ 1/16" TOLERANCE. DO NOT NOTCH OR CUT PLATES.
8. ALL BEAMS SHOWN ARE DROP (U.N.O.) ON PLANS.
9. AS AN ALTERNATE TO USING SIMPSON PRODUCTS OTHER CONNECTORS CAN BE USED, AS LONG AS THEIR CAPACITIES ARE EQUAL TO OR BETTER THAN SIMPSON'S, AND SUBJECTED TO THE APPROVAL OF GOUVIS ENGINERING.
10. USE SIMPSON " IUS/ITS/U310 " HANGERS FOR CONNECTION OF I-JOISTS TO OTHER FRAMING MEMBERS (U.N.O.) AND " LUS " HANGERS FOR CONNECTION OF SOLID JOISTS.
11. ALL WOOD I-JOISTS SHALL BE IN COMPLIANCE WITH THE PROVISIONS OF APA PRI-400, EWS-Z725B (PERFORMANCE RATED I-JOIST STANDARD) OR ASTM D5055. QUALIFIED PRI-400, MANUFACTURED. I-JOIST CAN BE ANY OF THOSE LISTED IN THE TABLE ABOVE.
12. ENGINEERING WOOD PRODUCTS (EWP) CAN BE FROM ANY MANUFACTURER WITH CURRENT APPROVED ICC ES - EVALUATION REPORT WITH THE FOLLOWING MECHANICAL PROPERTIES:
    Fb = 2800 psi (MIN), Fv = 285 psi (MIN), E = 2.2 x 10^6 psi (MIN).
    Fb = 2800 psi (MIN), Fv = 285 psi (MIN), E = 2.0 x 10^6 psi (MIN).
    Fb = 2325 psi (MIN), Fv = 285 psi (MIN), E = 1.55 x 10^6 psi (MIN).
    Fb = 1700 psi (MIN), Fv = 285 psi (MIN), E = 1.3 x 10^6 psi (MIN).
    FOR MANUFACTURED RIM BOARD WITH MIN 1 1/4" THICK, CONTINUOUSLY SUPPORTED BY WALL AND MATCHES JOIST DEPTH:
    Fc ⊥ (PERPENDICULAR)..... = 680 psi (MIN) Ft = 1075 psi (MIN),
    Fc // (PARALLEL)..... = 1400 psi (MIN) E = 1.3 x 10^6 psi (MIN)
    GLU-LAM BEAM SHALL BE:
    24F-V4, DF/DF : Fb = 2400/ 1850 psi @ BOTTOM/ TOP, Fv = 265 psi, E = 1.8 x 10^6 psi (MIN).
    24F-V8, DF/DF : Fb = 2400 psi @ BOTTOM & TOP, Fv = 265 psi, E = 1.8 x 10^6 psi (MIN).
13. A 4x6 (ALT. 2-2x6) HDR. SHOULD BE USED AT ALL OPENINGS IN EXTERIOR & INTERIOR BEARING WALLS U.N.O. ON PLANS. REFER TO THE FOLLOWING TABLE FOR OTHER COMMON HEADER SIZES.

PLAN DESIGNATION	HEADER SIZE	ALT. HEADER SIZE *
H1	4 x 6	2 - 2 x 6
H2	4 x 8	2 - 2 x 8

* 2-2 x SHALL BE PLACED ON END W/ 1/2" PLYWOOD SHIM BETWEEN. PROVIDE 16d NAILS @ 16" O.C., STAGG., BOTH SIDES.

14. THE FOLLOWING TRIMMER SCHEDULE SHOULD BE USED FOR HEADERS IN BEARING WALLS, U.N.O. ON THE PLAN. REQUIRED TRIMMER MUST BE APPLIED @ EACH END OF HEADER.

CLEAR SPAN, L		
L ≤ 6'-0"	6'-0" < L ≤ 10'-0"	L ≥ 10'-0"
2 x	2-2 x	SEE PLAN

15. FLOOR TO FLOOR HOLDOWN (H) APPLY DETAIL AT EACH END OF SHEAR WALL PER PLAN. (2) LOCATIONS PER WALL AS SHOWN BELOW. SEE TABLE FOR TYPE & DETAIL REFFERENCE. MIN. POST SIZE IS NOTED IN THE DETAIL

PER PLAN	REFERENCE & APPLY DETAIL	PER PLAN	REFERENCE & APPLY DETAIL	PER PLAN	REFERENCE & APPLY DETAIL
A	1A / SD-3	C*	1C* / SD-3	F	1F / SD-3
B	1B / SD-3	D	1D / SD-3	G	1G / SD-3
C	1C / SD-3	E	1E / SD-3	H	1H / SD-3

16. INTERIOR NON-BEARING & NON-SHEAR WALLS MAY BE FRAMED WITH 2x STUDS AT 24" O.C., MAX.
17. TOP PLATES AT ALL ROOF FRAMING LEVELS SHOULD BE SPLICED PER 9A/SD2, U.N.O. ON PLANS.
18. CONTINUOUS 1 ¼" LSL RIM JOISTS SHOULD BE USED AT ALL FLOOR FRAMING EDGES WHERE POSSIBLE. ALL RIM BREAKS SHOULD BE SPLICED WITH A SINGLE CS16 x 36" STRAP, PER 4A/SD2 U.NO. ON PLANS.
19. ATTACH WOOD FRAMING ELEMENT TO STEEL MEMBER WITH 1/2" Ø STUD BOLTS AT 24" O.C. STAGGERED U.N.O
20. REFER TO ARCHITECTURAL PLANS/DETAILS FOR BEAM/COLUMN FIRE RESISTANCE ASSEMBLIES.
21. TIGHT FIT SOLID COMPRESSION BLOCKING REQUIRED BETWEEN DRAG MEMBERS, FILLING GAP AT PARTY WALLS.

STUD AND TRIMMER SCHEDULE

24	2X4 STUD	226	2-2X6 STUD	24T	2X4 TRIMMER	26T	2-2X6 TRIMMER
26	2X6 STUD	324	3-2X4 STUD	26T	2X6 TRIMMER	324T	3-2X4 TRIMMER
224	2-2X4 STUD	326	3-2X6 STUD	224T	2-2X4 TRIMMER	326T	3-2X6 TRIMMER

POST AND TRIMMER SCHEDULE

44	4X4 POST	412	4X12 POST	44T	4X4 TRIMMER	66T	6X6 TRIMMER
46	4X6 POST	66	6X6 POST	46T	4X6 TRIMMER	68T	6X8 TRIMMER
48	4X8 POST	68	6X8 POST	48T	4X8 TRIMMER	88T	8X8 TRIMMER
410	4X10 POST	88	8X8 POST				

BEAM SCHEDULE

414-1.55E	3 1/2"x14" 1.55E EWP FL BM
214-1.55E	1 3/4"x14" 1.55E EWP FL BM
414-2.0E	3 1/2"X14" 2.0E EWP FL BM
614-2.0E	5 1/4"X14" 2.0E EWP FL BM

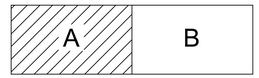

KEYPLAN

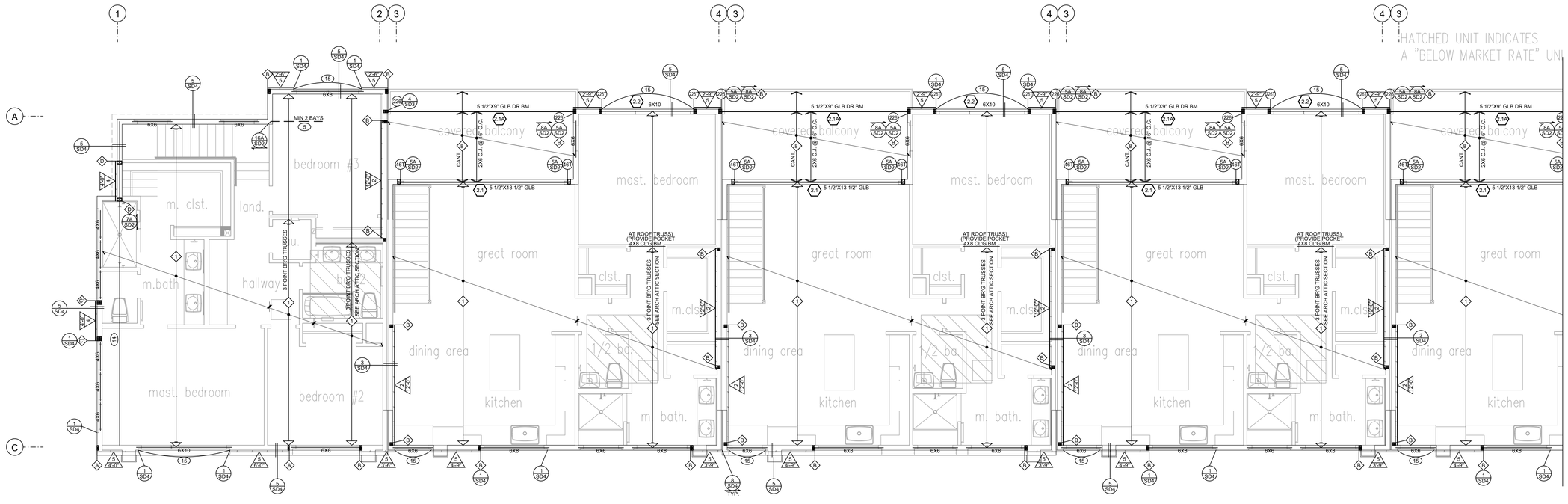

ROOF FRAMING PLAN
BUILDING 2 - AREA A

SCALE : 3/16" = 1'-0"

ISSUED DATE: 5/5/2022

GOUVIS engineering
consulting group, inc.
15 Studebaker
Irvine
CA 92618

Irvine
tel 949.752.1612
fax 949.752.5321

Palm Springs
tel 760.323.5090

REGISTERED PROFESSIONAL ENGINEER DRAKORN COSTAKIL No. S 5226 Exp. 6/30/23 STRUCTURAL STATE OF CALIFORNIA

DATE SIGNED: 2/3/23

RESTRICTIVE NOTICE

THESE DESIGNS, DRAWINGS, AND SPECIFICATIONS ARE THE EXCLUSIVE PROPERTY OF GOUVIS ENGINEERING CONSULTING GROUP. THEY ARE THE SUBJECT OF COPYRIGHT AND OTHER LEGAL PROTECTION. THEY MAY BE USED ONLY BY THEIR INTENDED RECIPIENT AND ONLY FOR THE PROJECT DEPICTED HEREIN. NO PART OF THESE DRAWINGS ARE TO BE COPIED, TRANSFERRED, REPRODUCED, NOR CAN THEY BE USED, IN WHOLE OR IN PART, BY ANY OTHER PERSON OR FOR ANY OTHER PROJECT OR STRUCTURE, WITHOUT THE PRIOR EXPRESS WRITTEN CONSENT OF GOUVIS ENGINEERING CONSULTING GROUP

© 2017 GOUVIS ENGINEERING CONSULTING GROUP INC. - ALL RIGHTS RESERVED

PROJECT:
Tenant Square

DEVELOPER:
Osito Holdings LLC

ARCHITECT:

LOCATION:
Morgan Hill
Santa Clara
CA

REVISIONS

NO.	DATE	DESCRIPTION
1	02/02/23	BLDG DEPT.

SHEET NAME:
ROOF FRAMING PLAN
BUILDING 2 - AREA A

PROJECT NUMBER:
66074

ENGINEER: GE
DRAFTER: GE

SHEET NUMBER:
S-2.3A

SYMBOLS LEGEND

- POST OR TRIMMER AS NOTED
- DIRECTION OF ROOF MEMBER PER SCHEDULE, REFER TO HATCHED WALLS ON PLANS FOR INTERMEDIATE BR'G
- DIRECTION OF FLOOR MEMBER PER SCHEDULE, REFER TO HATCHED WALLS ON PLANS FOR INTERMEDIATE BR'G
- DIRECTION OF DECK MEMBER PER SCHEDULE, REFER TO HATCHED WALLS ON PLANS FOR INTERMEDIATE BR'G
- SHEAR PANEL LENGTH AND NUMBER. REFER TO SN-1 FOR PANEL TYPE
- DETAIL NUMBER / DETAIL SHEET NUMBER
- BEAM NUMBER, REFER TO GOUVIS ENGINEERING CALCULATIONS
- XXX - X.XE — MINIMUM MODULUS OF ELASTICITY (E) / BEAM SIZE, SEE BEAM SCHEDULE
- KEY NOTE NUMBER
- BEARING WALL
- CALIFORNIA FRAMING

KEY NOTES

1. CONTINUOUS 1 1/4" WIDE MIN. LVL / TIMBERSTRAND OR SPLICE PER PLAN.
2. ALIGN POST(S) WITH UPPER FLOOR POST(S), SEE DETAIL 2-SN2
3. CONTINUOUS JOIST W/ E.N.
4. DRAG STRUT W/E.N.. SEE PLANS/DETAILS FOR LENGTH. SUPPORT END W/ BLK'G
5. LINE OF 2X FLAT BLOCKING W/ EDGE NAIL & CONTINUOUS CS16 STRAP OVER U.N.O. SEE PLAN FOR NUMBER OF BAYS.
6. CONTINUOUS FULL HT. BLKG. W/E.N. SEE PLANS FOR NUMBER OF BAYS (U.N.O.)
7. CONTINUOUS LINE OF BLOCKING W/ EDGE NAIL UNDER SHEAR WALL ABOVE W/ (1) CS16, U.N.O.
8. BLOCKED ROOF DIAPHRAGM W/ 8d's @ 4" O.C. B.N., 6" O.C. E.N. & 12" O.C. F.N.
9. BLOCKED FLOOR DIAPHRAGM W/ 10d's @ 4" O.C. B.N., 6" O.C. E.N. & 12" O.C. F.N.
10. SHEAR TRUSS W/E.N. TRUSS TO TRANSFER 180 PLF MIN. (U.N.O.)
11. TRUSS HANGER BY TRUSS SUPPLIER
12. (1) SIMPSON HTS20 FLUSH BEAM TO DROP BEAM (U.N.O.)
13. PROVIDE SOLID BLOCKING
14. DRAG TRUSS W/E.N. TRUSS TO TRANSFER 1700# FORCE MIN. (U.N.O.)
15. BLOCKED OPENING SEE DETAIL 15/SD2
16. CONTINUOUS SHEAR TRUSS W/ E.N OVER EACH PARTY WALL AT ROOF LEVEL DESIGN TRUSS TO TRANSFER 180 PLF MIN. LATERALLY.
17. COUNTERSINK AS REQUIRED NO OVER CUT.

FRAMING SCHEDULE

1. DESIGNED ROOF TRUSSES @ 24" O.C.
2. 14" TJI 210 I-JOISTS (OR EQUAL) @ 19.2" O.C.
3. 14" TJI 210 I-JOISTS (OR EQUAL) @ 16" O.C.
4. 14" TJI 230 I-JOISTS (OR EQUAL) @ 16" O.C.
5. 14" TJI 360 I-JOISTS (OR EQUAL) @ 12" O.C.
6. 2 x 12 DECK JOISTS @ 16" O.C.
7. 2 X 10 ROOF JOISTS / RAFTERS @ 16" O.C.
8. METAL RIBBED ALUMINUM ROOF BY OTHERS. ALT. 2 X 8 ROOF JOISTS @ 16" O.C.

MANUFACTURER		I LEVEL BY WEYERHAEUSER	LOUISIANA PACIFIC	BOISE CASCADE	ROSEBURG
ICC-ES REPORT		ESR-1153	ESR-1305	ESR-1336	ESR-1251
DEPTH	11 7/8"	TJI 210	LPI 36	BCI 6000-1.7	RFPI-400
		TJI 360	LPI 56	BCI 60-2.0	RFPI-70
		TJI 560	N/A	BCI 90-2.0	RFPI-90
	14" & 16"	TJI 210	LPI 530	BCI 6000-1.8	RFPI-400
		TJI 360	LPI 56	BCI 60-2.0	RFPI-70
		TJI 560	N/A	N/A	RFPI-90

FRAMING NOTES

1. REFER TO STRUCTURAL GENERAL NOTES AND DETAIL SHEETS (SN-1 & SN-2) FOR MORE INFORMATION.
2. REFER TO DETAIL 3/SN2 FOR TYPICAL CONNECTION AT ALL INTERIOR NON-BEARING WALLS AT ROOF LEVEL.
3. SHEAR WALLS CANNOT BE USED AS PLUMBING WALLS, UNLESS APPROVED BY GOUVIS ENGINEERING CONSULTING GROUP IN WRITING.
4. AT DOUBLE SIDED SHEAR WALLS, POST W/E.N. PER PLAN TO RECEIVE E.N. FROM BOTH SIDES.
5. WHEN MULTIPLE STUDS ARE USED INSTEAD OF A SINGLE POST, PLYWOOD SHEAR WALL TO BE NAILED TO ALL STUDS RECEIVING HOLDOWNS.
6. APPLY SHEAR PRIOR TO FRAMING OF PERPPENDICULAR WALLS. DO NOT BREAK SHEAR AT PERPENDICULAR WALL LOCATIONS UNLESS SPECIFICALLY DETAILED ON PLANS.

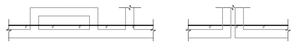

7. ALL VERTICAL PIPES THROUGH PLATES AND/OR SOLID RIM BEAMS MUST BE DRILLED CLEAN CUT W/ 1/16" TOLERANCE. DO NOT NOTCH OR CUT PLATES.
8. ALL BEAMS SHOWN ARE DROP (U.N.O.) ON PLANS.
9. AS AN ALTERNATE TO USING SIMPSON PRODUCTS OTHER CONNECTORS CAN BE USED, AS LONG AS THEIR CAPACITIES ARE EQUAL TO OR BETTER THAN SIMPSON'S, AND SUBJECTED TO THE APPROVAL OF GOUVIS ENGINERING.
10. USE SIMPSON " IUS/ITS/U310 " HANGERS FOR CONNECTION OF I-JOISTS TO OTHER FRAMING MEMBERS (U.N.O.) AND " LUS " HANGERS FOR CONNECTION OF SOLID JOISTS.
11. ALL WOOD I-JOISTS SHALL BE IN COMPLIANCE WITH THE PROVISIONS OF APA PRI-400, EWS-Z725B (PERFORMANCE RATED I-JOIST STANDARD) OR ASTM D5055. QUALIFIED PRI-400, MANUFACTURED. I-JOIST CAN BE ANY OF THOSE LISTED IN THE TABLE ABOVE.
12. ENGINEERING WOOD PRODUCTS (EWP) CAN BE FROM ANY MANUFACTURER WITH CURRENT APPROVED ICC ES - EVALUATION REPORT WITH THE FOLLOWING MECHANICAL PROPERTIES:
    Fb = 2800 psi (MIN), Fv = 285 psi (MIN), E = 2.2 x 10^6 psi (MIN).
    Fb = 2800 psi (MIN), Fv = 285 psi (MIN), E = 2.0 x 10^6 psi (MIN).
    Fb = 2325 psi (MIN), Fv = 285 psi (MIN), E = 1.55 x 10^6 psi (MIN).
    Fb = 1700 psi (MIN), Fv = 285 psi (MIN), E = 1.3 x 10^6 psi (MIN).
    FOR MANUFACTURED RIM BOARD WITH MIN 1 1/4" THICK, CONTINUOUSLY SUPPORTED BY WALL, AND MATCHES JOIST DEPTH:
    Fc ⊥ (PERPENDICULAR)..... = 680 psi (MIN) Ft = 1075 psi (MIN),
    Fc // (PARALLEL)..... = 1400 psi (MIN) E = 1.3 x 10^6 psi (MIN)
    GLU-LAM BEAM SHALL BE:
    24F-V4, DF/DF : Fb = 2400/ 1850 psi @ BOTTOM/ TOP, Fv = 265 psi, E = 1.8 x 10^6 psi (MIN).
    24F-V8, DF/DF : Fb = 2400 psi @ BOTTOM & TOP, Fv = 265 psi, E = 1.8 x 10^6 psi (MIN).
13. A 4x6 (ALT. 2-2x6) HDR. SHOULD BE USED AT ALL OPENINGS IN EXTERIOR & INTERIOR BEARING WALLS U.N.O. ON PLANS. REFER TO THE FOLLOWING TABLE FOR OTHER COMMON HEADER SIZES.

PLAN DESIGNATION	HEADER SIZE	ALT. HEADER SIZE *
H1	4 x 6	2 - 2 x 6
H2	4 x 8	2 - 2 x 8

* 2-2 x SHALL BE PLACED ON END W/ 1/2" PLYWOOD SHIM BETWEEN. PROVIDE 16d NAILS @ 16" O.C., STAGG., BOTH SIDES.

14. THE FOLLOWING TRIMMER SCHEDULE SHOULD BE USED FOR HEADERS IN BEARING WALLS, U.N.O. ON THE PLAN. REQUIRED TRIMMER MUST BE APPLIED @ EACH END OF HEADER.

CLEAR SPAN, L		
L ≤ 6'-0"	6'-0" < L ≤ 10'-0"	L ≥ 10'-0"
2 x	2-2 x	SEE PLAN

15. FLOOR TO FLOOR HOLDOWN (H) APPLY DETAIL AT EACH END OF SHEAR WALL PER PLAN. (2) LOCATIONS PER WALL AS SHOWN BELOW. SEE TABLE FOR TYPE & DETAIL REFFERENCE. MIN. POST SIZE IS NOTED IN THE DETAIL

PER PLAN	REFERENCE & APPLY DETAIL	PER PLAN	REFERENCE & APPLY DETAIL	PER PLAN	REFERENCE & APPLY DETAIL
A	1A / SD-3	C*	1C* / SD-3	F	1F / SD-3
B	1B / SD-3	D	1D / SD-3	G	1G / SD-3
C	1C / SD-3	E	1E / SD-3	H	1H / SD-3

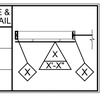

16. INTERIOR NON-BEARING & NON-SHEAR WALLS MAY BE FRAMED WITH 2x STUDS AT 24" O.C., MAX.
17. TOP PLATES AT ALL ROOF FRAMING LEVELS SHOULD BE SPLICED PER 9A/SD2, U.N.O. ON PLANS.
18. CONTINUOUS 1 ¾" LSL RIM JOISTS SHOULD BE USED AT ALL FLOOR FRAMING EDGES WHERE POSSIBLE. ALL RIM BREAKS SHOULD BE SPLICED WITH A SINGLE CS16 x 36" STRAP, PER 4A/SD2 U.NO. ON PLANS.
19. ATTACH WOOD FRAMING ELEMENT TO STEEL MEMBER WITH 1/2" Ø STUD BOLTS AT 24" O.C. STAGGERED U.N.O
20. REFER TO ARCHITECTURAL PLANS/DETAILS FOR BEAM/COLUMN FIRE RESISTANCE ASSEMBLIES.
21. TIGHT FIT SOLID COMPRESSION BLOCKING REQUIRED BETWEEN DRAG MEMBERS, FILLING GAP AT PARTY WALLS.

STUD AND TRIMMER SCHEDULE

(24) 2X4 STUD	(226) 2-2X6 STUD	(24T) 2X4 TRIMMER	(26T) 2-2X6 TRIMMER
(26) 2X6 STUD	(324) 3-2X4 STUD	(26T) 2X6 TRIMMER	(24T) 3-2X4 TRIMMER
(224) 2-2X4 STUD	(326) 3-2X6 STUD	(22T) 2-2X4 TRIMMER	(32T) 3-2X6 TRIMMER

POST AND TRIMMER SCHEDULE

(44) 4X4 POST	(412) 4X12 POST	(44T) 4X4 TRIMMER	(66T) 6X6 TRIMMER
(46) 4X6 POST	(66) 6X6 POST	(46T) 4X6 TRIMMER	(68T) 6X8 TRIMMER
(48) 4X8 POST	(68) 6X8 POST	(48T) 4X8 TRIMMER	(88T) 8X8 TRIMMER
(410) 4X10 POST	(88) 8X8 POST		

BEAM SCHEDULE

414-1.55E	3 1/2"x14" 1.55E EWP FL BM
214-1.55E	1 3/4"x14" 1.55E EWP FL BM
414-2.0E	3 1/2"X14" 2.0E EWP FL BM
614-2.0E	5 1/4"X14" 2.0E EWP FL BM

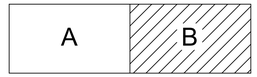

KEYPLAN

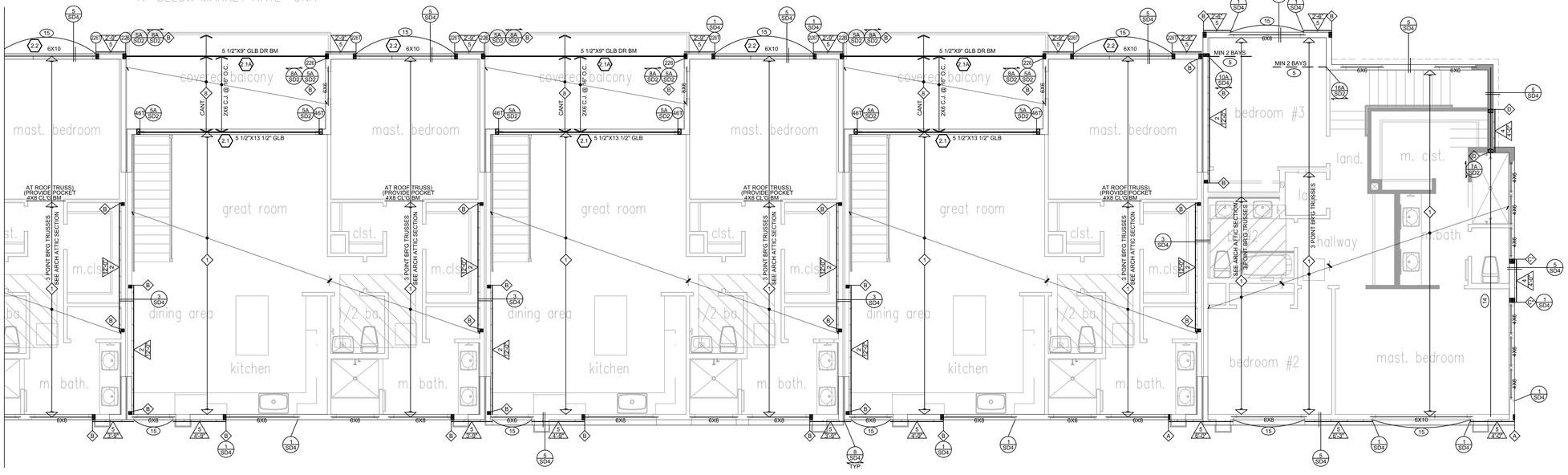

ROOF FRAMING PLAN
BUILDING 2 - AREA B

SCALE : 3/16" = 1'-0"

ISSUED DATE: 5/5/2022

GOUVIS engineering consulting group, inc.®
15 Studebaker
Irvine
CA 92618

Irvine
tel 949.752.1612
fax 949.752.5321

Palm Springs
tel 760.323.5090

REGISTERED PROFESSIONAL ENGINEER DIBAKORN COSAVIL No. S 5226 Exp. 6/30/23 STRUCTURAL STATE OF CALIFORNIA

DATE SIGNED: 2/3/23

RESTRICTIVE NOTICE

THESE DESIGNS, DRAWINGS, AND SPECIFICATIONS ARE THE EXCLUSIVE PROPERTY OF GOUVIS ENGINEERING CONSULTING GROUP. THEY ARE THE SUBJECT OF COPYRIGHT AND OTHER LEGAL PROTECTION. THEY MAY BE USED ONLY BY THEIR INTENDED RECIPIENT AND ONLY FOR THE PROJECT DEPICTED HEREIN. NO PART OF THESE DRAWINGS ARE TO BE COPIED, TRANSFERRED, REPRODUCED, NOR CAN THEY BE USED, IN WHOLE OR IN PART, BY ANY OTHER PERSON OR FOR ANY OTHER PROJECT OR STRUCTURE, WITHOUT THE PRIOR EXPRESS WRITTEN CONSENT OF GOUVIS ENGINEERING CONSULTING GROUP

© 2017 GOUVIS ENGINEERING CONSULTING GROUP INC. - ALL RIGHTS RESERVED

PROJECT:
Tenant Square

DEVELOPER:
Osito Holdings LLC

ARCHITECT:

LOCATION:
Morgan Hill
Santa Clara
CA

REVISIONS

NO.	DATE	DESCRIPTION
1	02/02/23	BLDG DEPT.

SHEET NAME:
ROOF FRAMING PLAN
BUILDING 2 - AREA B

PROJECT NUMBER:
66074

ENGINEER: GE
DRAFTER: GE

SHEET NUMBER:
S-2.3B

NOTE:
- 4x4 POSTS CAN BE REPLACED WITH 2-2x4 AS LONG AS NAILS ARE MAINTAINED WITH MIN. EDGE DISTANCE AS REQUIRED BY THE MANF. SPEC. & S.W. EDGE NAILS STAGGERED ON BOTH STUDS.

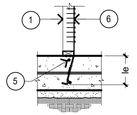

INTERIOR FOOTING INSTALLATION

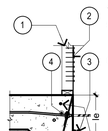

EXTERIOR FOOTING INSTALLATION

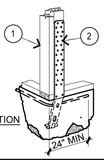

CORNER INSTALLATION

1. MIN. 4X4 POST (U.N.O.).
2. REFER TO PLANS & TABLE BELOW FOR CONNECTION TYPE.
3. WIDEN FOOTING WHERE OCCURS, SEE DETAIL 1.
4. STRAND IN PERPENDICULAR DIRECTION PER PLAN.
5. REBER PER TABLE, CENTERED @ "HD" (BEND REBAR @ CORNER). LOCATE TOP BAR 3" TO 5" FROM TOP OF CONCRETE.
6. LSTHD8 PER SCHEDULE.

NOTES:
- INSTALL STRAPS OVER SHEAR PANEL.
- REFER TO DETAILS #1 & #2 FOR MORE INFORMATION.
- MIN. f'c = 2500 psi.
- FOR MISSING OR MISLOCATED HOLDOWN STRAP, SEE DETAIL 18/SN-3.
- DEEPEN FOOTING AS REQUIRED TO ACHIEVE le+4 AND BEND THE REBAR CORNER AS NEEDED.
- USE STHD10RJ & STHD14RJ FOR RIM JOIST APPLICATION.

SIMPSON HOLDOWN	le	16d SINKER NAILS	#4 BAR x8'-0" CENTERED @ HD *
STHD10	10"	20	(1) TOP & (1) BOTT.
STHD14	14"	24	(1) TOP & (1) BOTT.

* CONT. FOOTING REINFORCEMENT/CABLE CAN BE COUNTED AS PART OF REBAR REQUIREMENT.

R HOLDOWN STRAP PT-17M-130204 17

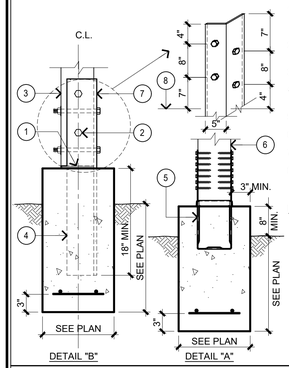

1. PROVIDE STEGO WATERPROOF MEMBRANE BETWEEN POST BASE AND TOP OF CONC FOOTING.
2. 5/8" DIA. M.B. WITH 2 1/2"X2 1/2"X1/4" WASHER.
3. 6X6 POST (U.N.O.).
4. EXTEND L5X5X1/2 INTO CONC. FOOTING AS SHOWN.
5. SIMPSON CBSQ.
6. MULTI -STUD OR POST PER PLAN.
7. L 5X5X1/2. U.N.O.
8. BOTTOM OF POST.

NOTES:
- WHEN DECK IS ADDED AFTER CONSTRUCTION OR DECK SYSTEM IS NOT PROPERLY CONNECTED TO THE BUILDING FOR LATERAL FORCES, USE DETAIL "B".
- WHEN DECK SYSTEM IS PROPERLY CONNECTED TO THE BUILDING FOR LATERAL FORCES PER EITHER DETAIL 4/SD2 OR 14/SD2, USE DETAIL "A".

R POST TO FOOTING AT DECK SE68-160808 18

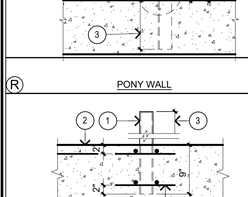

1. 3"X 3"X 1/4" STEEL ANGLE
2. (2) 3/8" DIA. CARRIAGE BOLTS W/ 1 1/2" SQ. X 3/16" PLATE WASHER TO WOOD MEMBER
3. 9" CONCRETE EMBEDMENT MIN.
4. 2X4 P.T.D.F. MEMBER
5. 2X4 P.T.D.F. PLATE (NOTCH AROUND STEEL ANGLE).

R PONY WALL PT-21N2 19

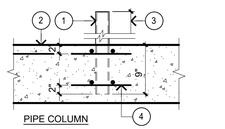

PIPE COLUMN

1. 3" DIA. CONCRETE FILLED PIPE BUMPER GUARD.
2. CONCRETE SLAB
3. 36" OR PER ARCHITECT.
4. (2) #4x15" EA. SIDE EA. WAY TOP & BOTT. (8) TOTAL

R PONY WALL, PIPE COLUMN PT-20N 20

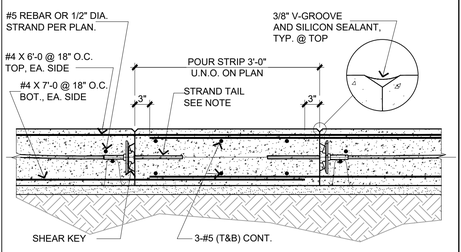

NOTES:

1. CLOSURE STRIP TO BE POURED WITH NON-SHRINK CONC. NOT LESS THAN 30 DAYS AFTER STRESSING SIDE POURS.
2. ROUGHEN & CLEAN JOINTS & WET PRIOR TO PLACING CONCRETE.
3. ELIMINATE ACCIDENTAL MISALIGNMENT BETWEEN EDGE OF SLABS THAT ARE TO BE JOINED WITH A CLOSURE STRIP. USE MECHANICAL METHODS SUCH AS JACKING IF NECESSARY.
4. IF CLOSURE IS EXPOSED TO WEATHERING AND/OR MOISTURE USE GROMMETS. CUT STRESSED STRAND TAILS, PREPARE AND SEAL STRESSING POCKETS AS STIPULATED IN GENERAL NOTES. CAULK JOINT ALL AROUND.

POUR STRIP PT-Pour Strip Mat-01 21

NOTE:
- 4x4 POSTS CAN BE REPLACED W/ 2-2x4 AS LONG AS NAILS ARE MAINTAINED W/ MIN. EDGE DISTANCE AS REQUIRED BY THE MANUF. SPEC. & S.W. EDGE NAILS STAGGERED ON BOTH STUDS.

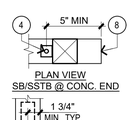

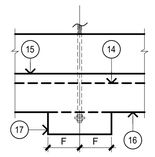

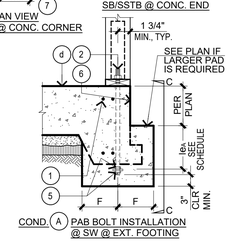

COND. A PAB BOLT INSTALLATION @ SW @ EXT. FOOTING

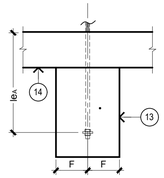

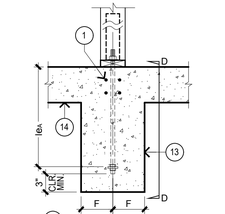

COND. A PAB BOLT INSTALLATION @ SW @ INT. FTG/SLAB

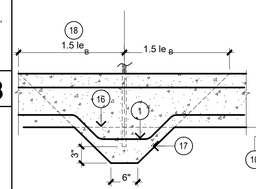

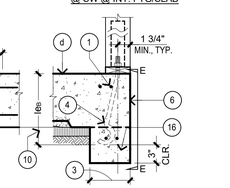

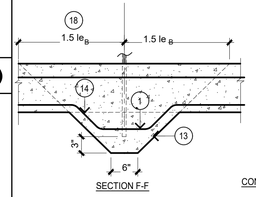

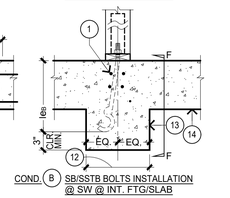

1. REBAR PER TABLE, CENTERED @ "HD" (BEND REBAR @ CORNER/ AT FTG TO SLAB). FOR COND. B, LOCATE TOP REBAR 3" TO 5" FROM TOP OF CONCRETE.
2. SIMPSON PAB STD. STEEL BOLTS PER SCHED (ALL THREAD F1554 GRADE 36/A36 RODS CAN BE USED IN LIEU OF PAB BOLTS).
3. CONCRETE STEM/FOOTING WIDTH (8" MIN. FOR 7/8"Ø BOLT, 6" MIN. FOR 5/8"Ø BOLT) ENTIRE EMBED. LENGTH.
4. SB/SSTB BOLTS PER SCHEDULE.
5. DOUBLE HEX NUTS WITH WASHER. SEE SCHEDULE FOR SIZES.
6. EXTERIOR FOOTING EDGE.
7. CONCRETE CORNER.
8. CONCRETE END.
9. WIDEN FTG. WHERE OCCURS, SEE DETAIL #1.
10. 20 5/8" FOR SSTB24, 24 7/8" (MIN.) FOR SSTB28. 18" FOR SB 5/8x24, 24" (MIN.) FOR SB 7/8x24 and SB1x30
11. USE 16d SINKER NAILS. (0.148"x3 1/4") FOR HTT5.
12. FTG WIDTH (13" FOR 7/8"Ø BOLT, 9" FOR 5/8"Ø BOLT).
13. EDGE OF DEEPENED SLAB/FTG FOR HOLDOWN @ INT. SHEAR WALL.
14. BOTTOM OF SLAB.
15. TOP OF DEEPENED EXT. FTG FOR PAB BOLT INSTALLATION.
16. BOTTOM OF EXT. FOOTING/ MAT.
17. EDGE OF EXTENDED/ENLARGED EXTERIOR FOOTING.
18. FOR ANCHOR BOLT LOCATED LESS THAN 1.5 le_B FROM CONC CORNER/END, EXTEND THE FTG AS FOLLOWS: CORNER COND. - THE REMAINING BALANCE OF 1.5 le_B (16" MAX.) INTO THE RETURN FOOTING. END. COND. - FOR SB/SSTB LOCATED AT LESS THAN 1.5 le_B FROM CONC FOOTING END, THE EXTENDED FOOTING PER SEC. E-E & SEC. F-F, ENDS AT WHERE CONCRETE FOOTING END PER PLAN.

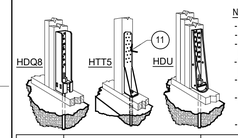

NOTES:
- SEE PLANS FOR HOLDOWN TYPES.
- SEE DETAIL #1 FOR LEGEND & INFO NOT SHOWN.
- FOR MISSING OR MISLOCATED HOLDOWN, SEE DETAIL 18/SN-3.
- REFER TO MANUFACTURER SPECIFICATIONS FOR INSTALLATION INFORMATION NOT SHOWN.
- WHEN 3-2X MEMBER IS USED FOR HDQ8 & HDU, 1/4"Ø x4 1/2" SDS SCREWS SHOULD BE USED.
- HEAVY HEX ANCHOR NUT IS REQUIRED ON LOAD TRANSFER PLATE FOR HDU11, HDU14, HHDQ11, & HHDQ14 HOLDOWNS.
- FOR HD12 AND HD19, USE 6X6 POST MIN.

SIMPSON HOLDOWN	(COND. A) PAB BOLTS SIZES	F (MIN)	le A	PL. WASHER SIZE(MIN.)	(COND. B) SB/ SSTB BOLTS SSTB	SB	FTG EXTENSION	REBARS x 8'-0" CENTERED @ HD *
HDU4/HTT5	PAB5	10"	6 3/4"	3"x3"x1 3/4"x1 3/4"	SSTB24	SB5/8x24	SEE SECT. E-E & SECT. F-F	(2)#4 T& (2)#4 B ALT. (1)#5 T& (1)#5 B
HDU8	PAB7	13 1/2"	9"	3"x3"x2 1/2"x2 1/2"	SSTB28	SB7/8x24		
HDQ8					SSTB28	SB7/8x24		
HDU11 HHDU11	PAB8	16 1/2"	11"	3"x3"x2 1/2"x2 1/2"	N./A.	SB1x30		(4) TOP & (4) BOT. ALT. (2)#5 T& (2)#5 B
HDU14 HHDQ14								
HD12	PAB9	19"	12 1/2"	3"x3"x3 1/2"x3 1/2"	N./A.	N./A.	N./A.	(3)#5 T& (3)#5 B
HD19	PAB10	22"	14 1/2"	3"x3"x3 1/2"x3 1/2"				

* CONT. FOOTING REINFORCEMENT CAN BE COUNTED AS PART OF REBAR REQUIREMENT IF BAR SIZE ARE SAME AS THOSE REQUIRED PER SCHEDULE; OTHERWISE, BARS PER SCHEDULE ARE ADDITIONAL.

R TYP. HOLDOWN INSTALLATION SE107M-210811 16

NOTES:
- PROVIDE CONTROL JOINT AT 20'-0" MAX. EA. WAY (U.N.O.)
- SEE DETAIL #1 FOR LEGEND & INFORMATION NOT SHOWN.
- PROVIDE SAW CUT WITHIN 24 HOURS OF POUR.
- TYPE OF CONTROL JOINTS TO BE SELECTED AND PLACED AT LOCATIONS SHOWN ON PLANS IN ACCORDANCE WITH GOOD CONSTRUCTION PRACTICE AT CONTRACTORS OPTION.

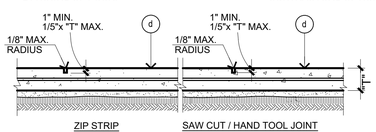

R TYPICAL CONTROL JOINT PT-10-11N 10

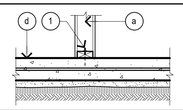

1. SEE FOUNDATION NOTE ON SN1. FOR SHOT PINS.

NOTE:
- SEE DETAIL #1 FOR LEGEND & INFORMATION NOT SHOWN.

PT-11-11N

R NON-BEARING INTERIOR WALL 11

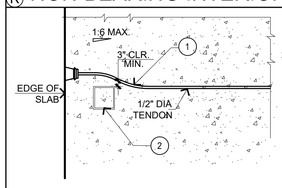

1. 6'-0" MIN. TRANSITION CURVE.
2. PLUMBING AND SEWER LINE OPENING.

R CABLE AT TUB BOX PT-12N 12

NOTES:
- WHEN POST LOAD BEARS @ CAST-ON SLAB, THICKEN CONC. MIN. 24"SQ., ALL THE WAY TO LOWER P.T. SLAB.
- SEE DETAIL #1 FOR LEGEND & INFORMATION NOT SHOWN.

1. ROUGHEN SLAB CONTACT SURFACES TO RECEIVE CAST-ON SLAB 2ND POUR.
2. ALL A.B., HD.B. & STRAPS MUST BE MADE LONG ENOUGH FOR MIN. EMBEB. INTO FIRST POUR OF SLAB OR FOOTINGS.
3. SAND BASE MAY BE REPLACED W/SOLID CONC. AT CONTRACTOR'S OPTION.
4. 4" THICK MIN. BUILT-UP SLAB OVER COMPACTED MOISTENED SAND BASE.
5. 6X6 - 10/10 W.W.M. OR #3 @ 18" O.C. EACH WAY.

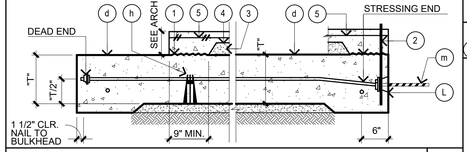

R BUILT-UP SLAB & TENDON SUPP. PT-13-11-110401 13

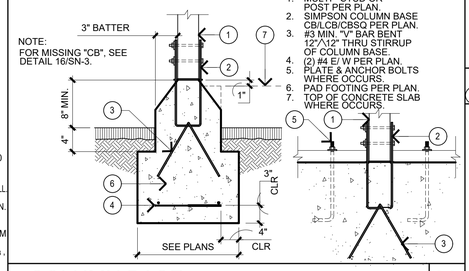

1. MULTI - STUD OR POST PER PLAN.
2. SIMPSON COLUMN BASE CBI/LCB/CBSQ PER PLAN.
3. #3 MIN. "V" BAR BENT 12"/\12" THRU STIRRUP OF COLUMN BASE.
4. (2) #4 E/ W PER PLAN.
5. PLATE & ANCHOR BOLTS WHERE OCCURS.
6. PAD FOOTING PER PLAN.
7. TOP OF CONCRETE SLAB WHERE OCCURS.

R COLUMN BASE PT-14N 14

NOTES:
- SEE DETAIL #1 FOR LEGEND AND INFORMATION NOT SHOWN.

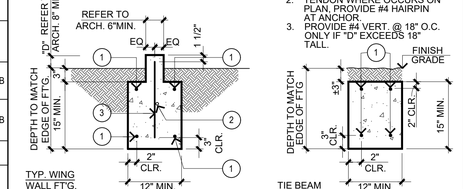

1. (2) #4 T & B W/ 2'-0" MIN. LAP & EMBEDMENT IN ADJACENT SLAB & FTG.
2. TENDON WHERE OCCURS ON PLAN, PROVIDE #4 HAIRPIN AT ANCHOR.
3. PROVIDE #4 VERT. @ 18" O.C. ONLY IF "D" EXCEEDS 18" TALL.

R TIE BEAM / WING WALL PT-19N 15

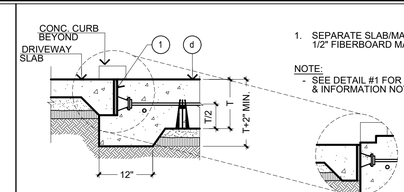

1. SEPARATE SLAB/MAT WITH 1/2" FIBERBOARD MATERIAL.

NOTE:
- SEE DETAIL #1 FOR LEGEND & INFORMATION NOT SHOWN.

R DRIVEWAY TO GARAGE/APRON PT-4-11-110901 4

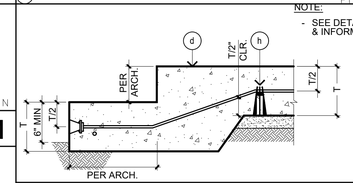

NOTE:
- SEE DETAIL #1 FOR LEGEND & INFORMATION NOT SHOWN.

R POTSHELF FOOTING PT-5-11-110401 5

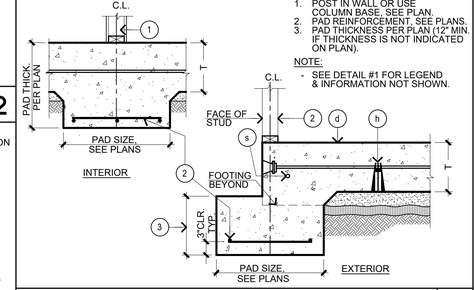

1. POST IN WALL OR USE COLUMN BASE, SEE PLAN.
2. PAD REINFORCEMENT, SEE PLANS.
3. PAD THICKNESS PER PLAN (12" MIN. IF THICKNESS IS NOT INDICATED ON PLAN).

NOTE:
- SEE DETAIL #1 FOR LEGEND & INFORMATION NOT SHOWN.

R TYP. PAD FOOTING DETAIL PT-6-11-130107 6

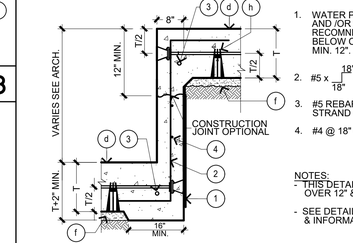

1. WATER PROOFING PER ARCH. AND /OR SOILS ENGINEER'S RECOMND'S. EXTEND VISQUEEN BELOW CONSTRUCTION JOINT MIN. 12".
2. #5 x 18"/18" @ 18" O.C (VERT.)
3. #5 REBAR OR 1/2" DIA. STRAND PER PLAN.
4. #4 @ 18" O.C. HORIZ.

NOTES:
- THIS DETAIL IS FOR DROPS OVER 12" & 30" MAX. (U.N.O.).
- SEE DETAIL #1 FOR LEGEND & INFORMATION NOT SHOWN.

R TYP. (SLAB) OFFSET DETAIL PT-7-11-110401 7

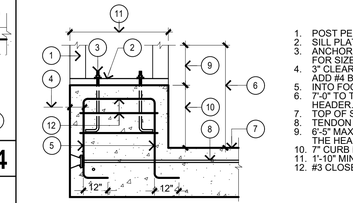

1. POST PER PLAN.
2. SILL PLATE.
3. ANCHOR BOLT. SEE PLANS FOR SIZE AND SPACING.
4. 3" CLEARANCE TYPICAL ADD #4 BAR BENT DOWN.
5. INTO FOOTING AT CURB.
6. 7'-0" TO THE BOTTOM OF THE HEADER.
7. TOP OF SLAB AT GARAGE.
8. TENDON PER DETAIL.
9. 6'-5" MAX. TO THE BOTTOM OF THE HEADER.
10. 7" CURB MIN.
11. 1'-10" MIN.
12. #3 CLOSED TIES @ 4" O.C.

R RAISED CURB DETAIL PT-8-110901 8

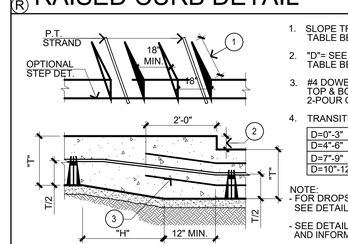

1. SLOPE TRANSITION (SEE TABLE BELOW).
2. "D"= SEE ARCH., ALSO SEE TABLE BELOW.
3. #4 DOWELS x 4'-0" LONG TOP & BOT. @ 24" O.C. AT 2-POUR ONLY.
4. TRANSITION LENGTH SCHED.

D=0"-3"	H=18"
D=4"-6"	H=24"
D=7"-9"	H=30"
D=10"-12"	H=36"

NOTE:
- FOR DROPS OVER 12" PLEASE SEE DETAIL 7-PT1
- SEE DETAIL #1 FOR LEGEND AND INFORMATION NOT SHOWN

R TYP. SLAB STEP DETAIL PT-9-11N 9

T=SLAB THICKNESS= 10.0"

STRUCTURAL DESIGN NOTES

1. DESIGN PARAMETERS FOR THE ANALYSIS OF THE POST TENSION SLAB ON GRADE IS BASED ON THE INFORMATION PROVIDED BY:
QUANTUM GEOTECHNICAL, INC, PROJECT NO. D071.G. MARCH 29, 2019
NOTE: DEVELOPER AND/OR CONTRACTOR SHALL SUBMIT DESIGN DOCUMENTS FOR THE FOUNDATION TO THE SOILS ENGINEER. THEY SHALL BE REVIEWED BY THE SOILS ENGINEER PRIOR TO THE START OF CONSTRUCTION.

DESIGN CATEGORY	(EXPANSIVE SOIL) EDGE LIFT	CENTER LIFT	ALLOWABLE SOIL BEARING PRESSURE	MAX. DIFFERENTIAL SETTLEMENT IF APPLICABLE (COMPRESSIBLE SOIL)
	Ym 0.97"	0.6"	1000 PSF	
	Em 4.5"	8.8"		
	Ym			
	Em			
	Ym			
	Em			

2. CONCRETE STRENGTH IS TO BE MINIMUM f'c=3000 psi AT 28 DAYS, 5" MAX. SLUMP. TYPE II OR V CEMENT. 1 1/2" MAXIMUM AGGREGATE SIZE.
SEE CONCRETE PLACEMENT NOTES FOR MORE INFORMATIONS.
3. TENDON ANCHORS SHALL BE AS MANUFACTURED BY PRECISION SURE-LOCK CO. INC. APPROVED BY ICC #2381 OR APPROVED EQUAL.
4. SEE ARCHITECTURAL (OR MANUFACTURERS) DRAWINGS FOR MASONRY OR PRECAST FIREPLACE FOUNDATION DETAILS, IF NOT SHOWN ON POST-TENSION PLANS.
5. FOLLOW THE CORROSION ENGINEER/EXPERT RECOMMENDATION WHEN CORROSIVITY EXISTS ON THE SITE.
6. SEE GENERAL NOTES UNDER "REINFORCED CONCRETE" FOR ADDITIONAL REQUIREMENTS.
7. SEE POST TENSION MAT FOUNDATION NOTES ON SN-1B FOR ADDITIONAL REQUIREMENTS.

NOTES:
- FOR MISSING/MISLOCATED AB., SEE DET. 18/SN-3 FOR FIX.
- FOR OVERSIZED HOLE IN SILL PLATE SEE DET. 15/SN-3 FOR FIX.
- VISQUEEN TO HAVE MIN. 12" WELDED LAP AT ALL SEAMS (U.N.O.) AND SHALL HAVE MIN. SURFACE FRICTION ANGLE 20 (VERIFY W/ MANUFACTURE'S SPEC.)
- VERIFY ALL INFORMATION PER UPDATED SOILS REPORT
- P.T. SLAB & FOOTING TO BE POURED MONOLITHICALLY. SEE FOUNDATION NOTE #15 ON SN-1
- DEEPEN FOOTING @ HOLDOWN FOR MIN. REQUIRED EMBEDMENTS.

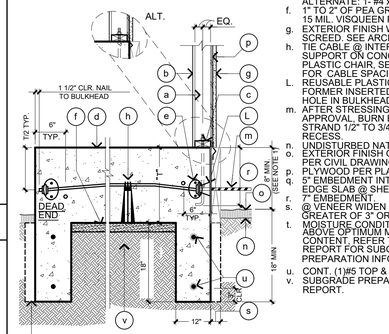

NOTES:

1. IF EXCEED 12", SEE DETAIL 23/PT-1.

TYP. EXTERIOR FOOTING PT-1-11N6 1

NOTE:
- SEE DETAIL #1 FOR LEGEND & INFORMATION NOT SHOWN.
- IN LIEU OF ANCHOR BOLTS USE SHOT PINS AS PER GENERAL NOTES FOR NON-SHEAR WALLS.

1. ADD #4 HORIZ.
2. MIN. 6".
3. #4 VERT. W/HOOK @ 12" O/C
4. MAX. 12".

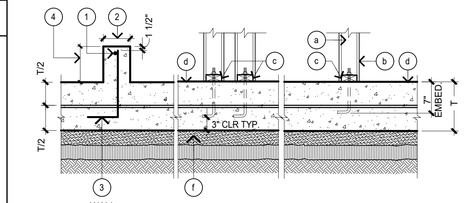

R TYPICAL INTERIOR FOOTING PT-2-11-131107 2

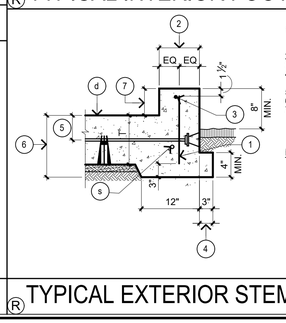

1. PROVIDE #4 VERT. @ 18" O.C. FOR CURB TALLER THAN 12" LESS THAN 24"
2. MIN. 6".
3. ADD #4 HORIZ
4. SEE DET. 1 FOR NOTES ON BRICK VENEER BASE.
5. T/2 CLR. ALL ANCHOR TYP.
6. DEPTH PER DETAIL 1/PT-1
7. MAX. 12" WITHOUT VERTICAL BARS

NOTES:
- MOISTENED SAND SHALL ALSO BE PLACED IN GARAGE SLAB AREA TO AID IN CONCRETE CURING, OMIT VISQUEEN IN GARAGE IF APPROVED BY SOIL ENGINEER BY EXTENDING VAPOR RETARDER UNDER HOUSE MAT 5 FEET INTO GARAGE.
- SEE DETAIL #1 FOR LEGEND & INFO. NOT SHOWN.

R TYPICAL EXTERIOR STEM WALL PT-3-11-131107 3

ISSUED DATE: 5/5/2022

GOUVIS engineering
consulting group, inc.
15 Studebaker
Irvine
CA 92618

Irvine
tel 949.752.1612
fax 949.752.5321

Palm Springs
tel 760.323.5090

REGISTERED PROFESSIONAL ENGINEER DEBORAH COSAUL No. S 5226 Exp. 6/30/23 STRUCTURAL STATE OF CALIFORNIA

DATE SIGNED: 2/3/23

RESTRICTIVE NOTICE

THESE DESIGNS, DRAWINGS, AND SPECIFICATIONS ARE THE EXCLUSIVE PROPERTY OF GOUVIS ENGINEERING CONSULTING GROUP. THEY ARE THE SUBJECT OF COPYRIGHT AND OTHER LEGAL PROTECTION. THEY MAY BE USED ONLY BY THEIR INTENDED RECIPIENT AND ONLY FOR THE PROJECT DEPICTED HEREIN. NO PART OF THESE DRAWINGS ARE TO BE COPIED, TRANSFERRED, REPRODUCED, NOR CAN THEY BE USED, IN WHOLE OR IN PART, BY ANY OTHER PERSON OR FOR ANY OTHER PROJECT OR STRUCTURE, WITHOUT THE PRIOR EXPRESS WRITTEN CONSENT OF GOUVIS ENGINEERING CONSULTING GROUP

© 2017 GOUVIS ENGINEERING CONSULTING GROUP INC. - ALL RIGHTS RESERVED

PROJECT:
Tenant Square

DEVELOPER:
Osito Holdings LLC

ARCHITECT:

LOCATION:
Morgan Hill
Santa Clara
CA

REVISIONS

NO.	DATE	DESCRIPTION
1	02/02/23	BLDG DEPT.

SHEET NAME:
POST TENSION MAT FOUNDATION DETAILS & NOTES

PROJECT NUMBER:
66074

ENGINEER: GE
DRAFTER: GE

SHEET NUMBER:
PT1

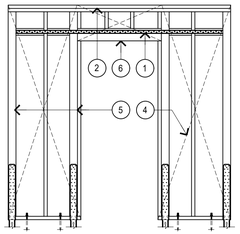

1. CS16 OVER SHEAR PANEL OVER 2X BLK'G W/8d @ 2 1/16" O.C. EXTEND ONTO HDR. OR WINDOW SILL & ACROSS SHEAR PANEL TYP. EACH CORNER OF OPENING. (ALT. INSTALL OVER 2X MIN. BLK'G ABOVE & BELOW OPENING FULL LENGTH OF SHEAR PANEL).
2. DOUBLE 2X TOP PLATE.
3. 2X STUD PER PLAN.
4. SHEAR PANEL TYPE PER PLAN ALL AROUND OPENING. PROVIDE B.N. AT BLK'G EDGES OF SHEAR WALL.
5. CONT. STUD/S OR POST W/ B.N. & WHOLD DOWN PER PLAN AT OUTSIDE EDGES OF SHEAR PANEL & EDGES OF DOORWAYS.
6. HEADER PER PLAN.
7. WINDOW SILL WHERE OCCURS.
8. NAILING/SCREWS/BOLT PER PLAN.
9. STAGGERED FACE NAILS PER NOTE 5 OF DETAIL 2/SN3.
10. PANEL EDGE.
11. USE (2)CS16 W/ (2)-2x or 4x BLKG AT KEY NOTE 15A

NOTES:
- INSTALL HOLDOWN ON RETURN WALL @ CORNERS WHEN APPLICABLE.
- USE FULL WIDTH BLK'G. & WINDOW SILL FOR STRAP ON BOTH SIDES OF DBL. SIDED SHEAR PANELS.
- NAIL BOTH PLWD. PANELS ON SAME MEMBER.
- REFER TO 17/SN2 FOR CS16 NAILING PATTERN.

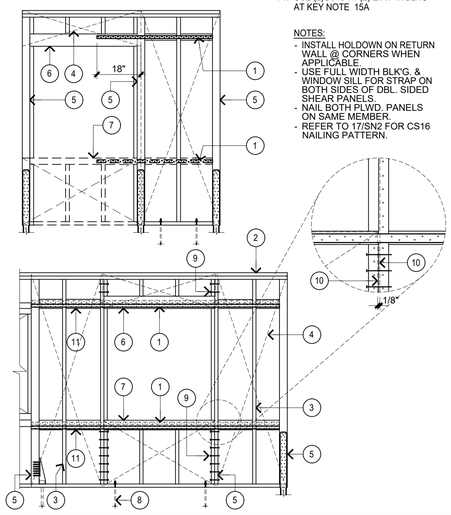

OPENING @ SHEAR WALL

GE100–120217 **15**

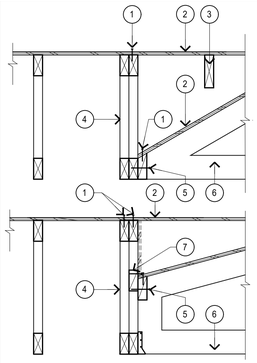

1. EDGE NAILING.
2. ROOF SHEATHING.
3. OVERFILL RAFTERS.
4. SHEAR/ GIRDER TRUSS PER MANUFACTURER.
5. 2X BLK'G. W/ 16d's SINKER NAILS AT 6" O.C. SEE DETAIL 13/SN2 FOR NON- BEVELED BLOCK.
6. MANUFACTURED TRUSS W/ APPROVED HANGER.
7. LINE OF BLK'G. INSTALLED BY TRUSS MANUFACTURER AND TO TRANSFER 250 PLF T0 TOP CHORD. IF GIRDER TRUSS IS NOT DESIGNED TO TRANSFER THIS LOAD, APPLY SHEAR PANEL TYPE 2.

SHEAR TRANSFER

D0044 100920 **11**

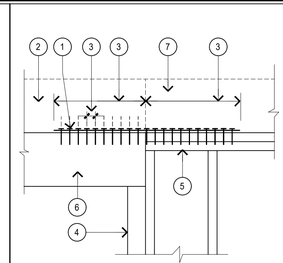

1. SIMPSON STRAP PER TABLE (2) ROWS OF NAILS FOR EA. STRAP.
2. SIMILAR COND. W/FLUSH BEAM JOIST (S). W/ NAILS FROM CS16
3. SPACING AND END LENGTH SEE TABLE.
4. POST OR MULTI STUD, SEE PLAN.
5. DBL. TOP PLATE.
6. BEAM OR JOIST (S), W/ LINE OF EDGE NAILING SEE PLAN.
7. CONT. JOIST OR BLOCKING, SEE FRAMING PLAN.

NOTES:
- MIN. 3 1/2" WIDE MEMBER FOR CONDITION C &D.
- REFER TO 17/SN2 FOR CS16 NAILING PATTERN.
- * MIN. 1/2" SPACING BETWEEN ROWS OF NAILS.

	STRAP	END LENGTH	NAIL SIZE AND SPACING	CAPACITY
A	CS16	3'-0"	8d BOX/SINKER AT 4 1/8"	1700#
B*	(2) CS16	3'-0"	8d BOX/SINKER AT 4 1/8"	3400#
C	CMSTC16	6'-0"	10d BOX AT 4 1/2"	4585#
D	CMST14	6'-3"	10d BOX AT 3 1/2"	6490#

DRAG DETAIL

D0032 100920 **8**

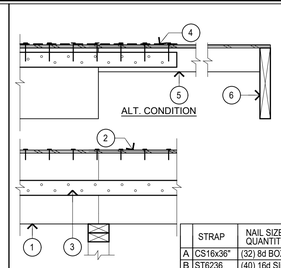

1. TIMBER STRAND, LSL OR 4X DRAG STRUT W/ E.N. PER PLANS. IF NOT CONTINUOUS SPLICE PER TABLE BELOW.
2. PLYWOOD SHEATHING W/ E.N. ALONG DRAG LINE.
3. SEE TABLE BELOW.
4. ALT. LOCATION.
5. 4X DRAG STRUT. ALT 2x FLAT @ CS16.
6. 2X FULL HT. HEAD OUT IF REQUIRED.

STRAP SHOULD BE CENTERED @ SPLICE POINT.

	STRAP	NAIL SIZE & QUANTITIES	CAPACITY	DRAG STRUT. LENGTH
A	CS16x36"	(32) 8d BOX/SINKER	1700#	8'-0" U.N.O.
B	ST6236	(40) 16d SINKER	3230#	14'-0"
C	MST48	(50) 16d SINKER	4460#	CONTINUOUS
D	MST60	(66) 16d SINKER	5653#	CONTINUOUS

DRAG DETAIL

D0034 100920 **4**

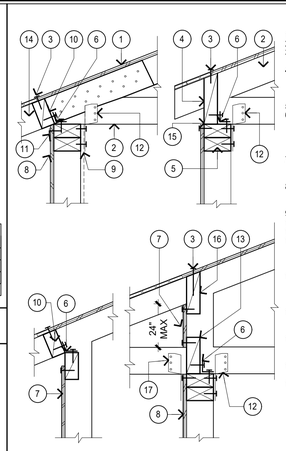

1. ROOF SHEATHING.
2. TRUSS BY MANUFACTURER.
3. RSRS 03 NAILS AT 6" O.C. B.N. U.N.O.
4. 2X FULL HEIGHT BEVELED BLK'G. (IF BLK'G. IS NOT BEVELED SEE DETAIL 13-SN2) IF BLK'G. NOT TIGHT FIT, SEE ITEM #15.
5. DBL. TOP PLATE OR BEAM.
6. SIMPSON A35 SPACING PER SW SCHEDULE (AT NON-SHEAR WALL, SPACING IS 48" O.C. MAX.). FOR VENT BLOCK SEE DETAIL 1A/SN-2
7. SHEAR PANEL TYPE 2 TYPICAL (U.N.O. ON PLANS) BETWEEN TRUSSES.
8. SEE PLAN FOR TYPE AND LOC. OF SHEAR PANEL ON 2X STUDS AT 16" O.C. MAX.
9. ALT. LOC. OF SHEAR PANEL
10. 2X FULLL HEIGHT BLOCKING.
11. TYPICAL BOUNDARY NAILING
12. SIMPSON "HI" @ EVERY TRUSS USE "LGT" FOR GIRDER TRUSS, WIDTH OF "LGT" TO MATCH NUMBER OF PLYS OF G.T.
13. 2X BLK'G. & UPPER SHEATHING ABV. PLATE CAN BE REPLACED W/ PRE-FABRICATED FULL DEPTH BLOCKING.
14. 2X RAFTER TAIL W/ MIN. 3'-0" LAP W/ 16d's 6" O.C. STAGG. OR TRUSS TOP CHORD.
15. MAX. GAP BETWEEN BLK'G. & TOP PLATE FOR HI TO 1/2" & FOR A35, TO BE 1/4".
16. 2X BEVELED BLK'G. SEE 13-SN2 IF NOT BEVELED.
17. ALT. LOCATION OF HI.

SHEAR TRANSFER DETAIL

D0022–180912 **1**

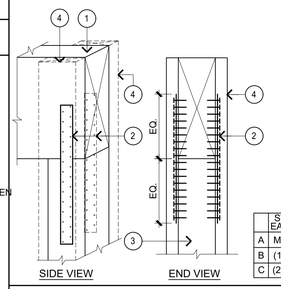

1. BM., SEE PLAN (MIN. DEPTH 12").
2. SIMPSON STRAP EACH SIDE OF BEAM TO POST.
3. POST, SEE PLAN.
4. ALT. TO MSTA12 STRAPS, USE 2X KING STUD EACH SIDE OF BEAM TO POST & NAIL W/ 16d'S @ 16" O.C. TO POST & MIN. (9) 16d'S TO BEAM.

NOTE:
- ADD SHIMS AS REQUIRED.
- IF THERE IS DBL. TOP PLATE BTWN. BM. & POST, INCREASE LENGTH OF STRAP TO ACCOMMODATE.
- FILL ALL STRAP HOLES WITH NAILS.

	STRAP EA. SIDE	CAPACITY	OVERALL LENGTH OF EACH STRAP
A	MSTA12	-	12"
B	(1) CS16	2900#	24"
C	(2) CS16	5600#	24"

POST & BEAM CONNECTION

D0038 100920 **5**

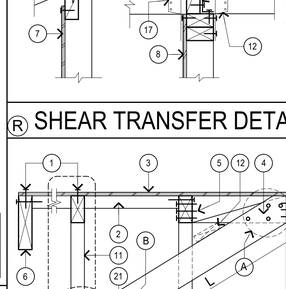

1. R/R OR TRUSS PER PLAN.
2. ROOF SHEATHING.
3. MIN. 1X CONT. BOARD W/ (3)16d's TO EACH ROOF FRAMING ELEMENT.
4. 2X R/R @ CA. FRAMING. USE 2X4 @ 24" O.C. FOR MAX. SPAN OF 8'-0" & 2X6 @ 24" O.C. FOR MAX. SPAN OF 10'-0". & TOE NAIL W/ (3) 8d's.
5. 2X6 PURLIN & 2X4 KICKER @ 8'-0" O.C. MAX. TO LIMIT R/R SPAN @ CALIF. FRAMING.
6. (1) BAY WIDTH X 30" ACCESS & VENTILATION OPENING PER ARCHITECTURAL. PROVIDE 2X BLKG. & BOUNDARY NAILING OF ROOF SHEATHING AROUND OPENING.
7. PRE-FABRICATED VALLEY TRUSS PER MANUFACTURER.
8. SIMPSON "H2" CLIPS @ EA. END OF VALLEY TRUSS WITH (5) 10dX1 1/2 NAILS TO VALLEY TRUSS & (4) 10dX1 1/2 NAILS TO ROOF FRAMING BELOW.

*ICC ESR#2605

CALIF. FRM'G SHEAR DETAIL

D0025 100920 **6**

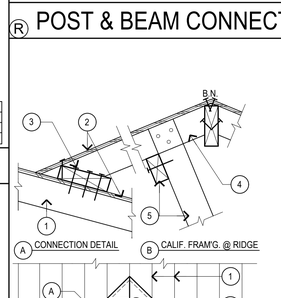

1. TYP. TRUSSES BEARING ON WALL
2. TYP. TRUSSES HANGING FROM GIRDER TRUSS OR BEAM
3. GIRDER TRUSS OR BEAM OFFSET FROM CORNER.
4. LINE OF BEVELED BLKG. W/E.N. OF ROOF SHT'G. SEE 13/SN2 IF NOT BEVELED. APPLY 16d's AT 8" O.C. TO THE GIRDER TRUSS (MIN. 5 BAYS).
5. ROOF SHEATHING
6. SIMPSON STRAP CUT TO FIT ON WALL AS SHOWN & ACROSS ALL BAYS OF BLKG. AS REQ'D. MIN. (4) BAYS W/ MIN. (3) NAILS TO EACH BLOCK. NAILS PER SCHEDULE. USE (2) ROWS OF NAILS EA. STRAP
7. END LENGTH & SPACING PER TABLE BELOW.
8. PROVIDE 2X4'X4'-0" MEMBER NEXT TO TRUSS AT CONDITION B & NAIL TO TRUSS W/ 16d'S @ 4" O.C. STAGGERED & FOR CONDITION C & D USE DBL. TRUSS W/ NAILS @ 4" O.C.
9. DRAG TRUSS W/ LINE OF E.N.
10. LINE OF BEVELED BLKG. W/ E.N., IF NOT BEVELED, SEE 13/SN2

NOTES:
- IF DRAG TRUSS IS A JACK TRUSS, PROVIDE PLYWOOD TYPE 2 FROM TOP TO BOTT. CHORD.
- USE DBL. BLKG. FOR CONDITION B, C & D
- REFER TO 17/SN2 FOR CS16 NAILING PATTERN.
- * APPLY ONLY AT TRUSS IN LINE CONDITION.
- ** NAIL LATERAL VALUES BASED ON SPF/HF.

	STRAP	END. LENGTH	NAIL SIZE AND SPACING	CAPACITY**
A	CS16	3'-0"	8d BOX/SINKER @ 4 1/8"	1700#
B	(2) CS16	3'-0"	8d BOX/SINKER @ 4 1/8"	3400#
C*	CMSTC16	6'-0"	16d SINKER @ 4 1/2"	4585#
D*	CMST14	6'-0"	16d SINKER @ 3 1/2"	6490#

DRAG DETAIL

D0023–110906 **7**

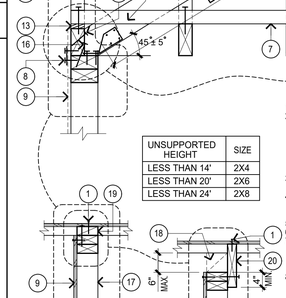

1. BOUNDARY NAILING.
2. NOTCH TRUSS TOP CHORD OR RAFTER WHERE OCCURS TO RUN 2X FLAT OUTRIGGERS @4'-0"O.C., FOR EAVES UP TO 12" & 2'-0"O.C. FOR EAVES UP TO 24" DO NOT OVER CUT. NAIL W/ (2) 16d's @ EACH END.
3. ROOF SHEATHING W/ LINE OF E.N. @ BLOCKING.
4. BRACING MEMBER FOR TRUSS DEEPER THAN 4'-0" PER TABLE BELOW.
5. (3)16d's EA. END OF TRUSS TO BLK'G.
6. 2X FASCIA BOARD WHERE OCCURS.
7. 2X4 FLAT STRONG BACK ACROSS MIN. (4) ROOF TRUSSES @ 8'-0" O.C. USE (2) 16d'S TO CONNECT TO EACH TRUSS.
8. LSSI SPACING PER SW SCHEDULE (AT NON-SHEAR WALL, SPACING @ 48" O.C. MAX). OMIT IF PLYWOOD IS NAILED TO BOTTOM CHORD OF TRUSS.
9. SHEAR PANEL WHERE OCCURS.
10. 2X BACKING W/ 8d COM.@6"O.C. FACE NAILS TO TOP PLATES.
11. STRUCT. GABLE END SHEAR TRUSS TO TRANSFER 240 PLF FROM TOP TO BOTT. CHORD (U.N.O.).
12. MAX UNSUPPORTED LENGTH OF 2X4 TO BE 6'-0". USE LATERAL BRACING FOR LENGTH > 6'-0".
13. SHIM AS REQUIRED.
14. (1)A35 E/S OF EACH BRACE.
15. 2X4 x24" LONG CENTERED @ BRACE W/ (5)16d's TO TRUSS.
16. 8d COM TOE NAILS @6" O.C.
17. FULL HT. BALLOON FRAME STUDS @ 16" O.C. MAX. U.N.O. TO BOTT. OF OUTRIGGER/GABLE END TRUSS/SCISSOR TRUSS. SIZE PER SCHEDULE U.N.O.
18. SHIM AS REQUIRED.
19. 2X FLAT BLOCKS W/ 16d's @ 4" O.C. TO PLATE BELOW.
20. ALTERNATE COND. W/ ROOF RAFTER NEXT TO WALL W/16 d's @ 8" O.C. TO TOP PLATE.
21. (2) 16d SINKER TOE NAILS BRACE TO TRUSS BOTTM CHORD.

UNSUPPORTED HEIGHT	SIZE
LESS THAN 14'	2X4
LESS THAN 20'	2X6
LESS THAN 24'	2X8

BRACE LENGTH	BRACE SPACING	BRACE SIZE	CONN. (A)	CONN. (B) *
L=5'-8"	6'-0" O.C.	2x4	(6) 16d's	H2.5A
L=10'-4"	6'-0" O.C.	(2) 2x4	(6) 16d's EA. BRACE	H2.5A EA. BRACE

* AS ALTERNATE TO H2.5A, USE H3, A34 OR A35.

NOTES:
- DIAGONAL BRACE CAN BE OMITTED @ LOCATION OF INTERSECTING WALLS AND WHEN FULL HT. STUDS USED TO BOTT. OF OUTRIGGER.
- FOR FLAT CONC. TILE ROOFING, ALLOW ROOF RAFTERS TO FLOAT AND NAIL TO TOP PLATE AFTER ROOF IS LOADED TO AVOID UNEVEN RAFTER DEFLECTION.

SHEAR TRANSFER DETAIL

D0015–131107 **2**

1. EDGE NAILING.
2. ROOF SHEATHING.
3. SHEAR TRUSS TO TRANSFER 200 PLF FROM TOP CHORD TO BOTTOM U.N.O.
4. SEE PLAN FOR TYPE.
5. TYPICAL TRUSSES.
6. A35'S EQUALLY SPACED PER SHEAR WALL SCHEDULE (AT NON-SHEAR WALL, @ 48" O.C. MAX.); CONNECT A35's AFTER ROOF IS IN PLACE.
7. 2X8 (MAX.) NAILER WITH 10d COMMON NAILS TO PLATE & TRUSS. USE SAME SPACING AS EDGE NAILS OF SW TYPE BELOW.
8. ALT. LOCATION OF A35 IF TRUSS IS OFFSET.

SHEAR TRANSFER

3

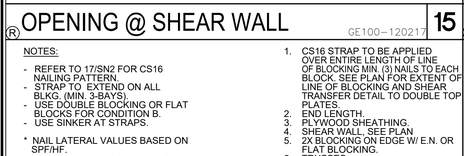

1. SEE PLAN FOR SHEAR PANEL.
2. ALT. LOCATION OF SHEAR PANEL.
3. 4X6 POST MIN. AS SHOWN.
4. 2X4 STUD (U.N.O.).
5. 16d's @ 3" O.C. STAGGERED FOR SHEAR PANEL TYPE 5 . USE 1/4"Ø"x4" SDS @ 4" O.C.
6. SHEAR WALL B.N.

"A" "C"

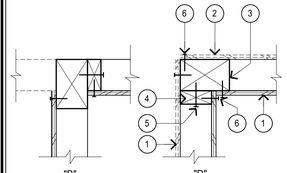

"B" "D"

PLAN VIEW

CONNECTION DETAILS

D0102 100920 **17**

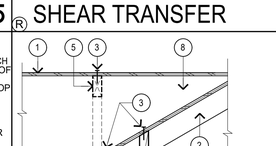

1. ROOF SHEATHING.
2. ROOF TRUSS.
3. EDGE NAILING.
4. 2X BEVELED BLK'G. IF BLK'G. IS NOT BEVELED, SEE 13/SN2.
5. GIRDER TRUSS/SHEAR TRUSS WHERE OCCURS.
6. 16d's @ 4" O.C. STAGGERED.
7. SHEAR PANEL PER PLAN.
8. CALIFORNIA FRAMING.
9. USE SAME SHEAR TYPE AS BELOW.
10. 2X BLK'G. W/ A35 @ 8" O.C. OMIT A35's IF PLYWOOD IS CONTINUOUS TO UPPER BLK'G.
11. A35, SPACING PER SHEAR WALL SCHEDULE (AT NON-SHEAR WALL, @ 48" O.C. MAX.).

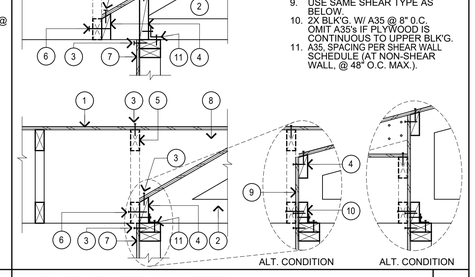

SHEAR TRANSFER

GE31 100920 **13**

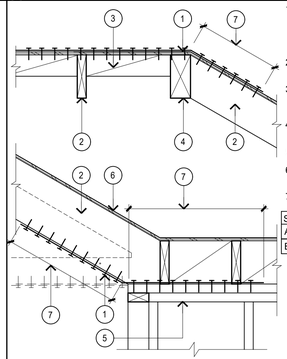

1. SIMPSON CS16 W/ (2) ROWS OF 8d SINKER NAILS @ 4 1/8" O.C. CUT TO FIT OVER ALL BAYS OF BLOCKING. WHERE APPLICABLE.
2. TYPICAL ROOF RAFTER OR TOP CHORD OF TRUSS.
3. 2X FLAT BLK'G. W/ E.N. SEE PLAN FOR NO. OF BAYS (MIN. 4 BAYS).
4. HIP BEAM OR TOP CHORD OF HIP TRUSS.
5. DBL. TOP PLATE OR BEAM.
6. ROOF SHEATHING W/ E.N. ALONG LINE OF DRAG.
7. END LENGTH.

	STRAP	CAPACITY**	END LENGTH
A	CS16	1700#	3'-6"
B*	(2)CS16	3400#	3'-6"

* ADD 2"X4"X48" LONG MEMBER TO RECEIVE 2ND. CS16 & NAIL W/16d's @ 4" O.C. STAGGERED TO ROOF RAFTER/TRUSS TOP CHORD.

* REFER TO 17/SN2 FOR CS16 NAILING PATTERN.

** NAIL LATERAL VALUES BASED ON SPF/HF.

DRAG DETAIL

D0111 100920 **14**

1. 2X BLOCKING.
2. EDGE NAILING.
3. 2X BEVELED LEDGER W/ (4) 16d's PER STUD U.N.O. (IF NOT BEVELED, SEE DETAIL 13/SN2).
4. 16d's AT 6" O.C. (U.N.O.)
5. H2.5A AT 48" O.C. FROM LEDGER TO PLATE. SLIT THE PLYWOOD TO INSTALL H2.5A .
6. 2X R/R OR TOP CHORD OF TRUSS.
7. PLYWOOD SHEAR PANEL TYPE 2 ENTIRE WALL FROM LOW ROOF TO HIGH ROOF U.N.O.
8. FULL HEIGHT SHEAR PANEL WHERE OCCURS. WHEN OUTSIDE, TO BE INSTALLED PRIOR TO ROOF FRAMING. IF SHEAR PANEL IS NOT CALLOUT ON PLAN. INSTALL SHEAR PANEL PER NOTE 7.
9. MIN. (3) 16d TOE NAILS TO LEDGER. IF SPAN OF ROOF MEMBER IS MORE THAN 8'-0" . USE JOIST HANGER.
10. ROOF SHEATHING.
11. 8d COMMON AT 4" O.C. (U.N.O.) PER SHEAR WALL SCHEDULE.
12. 2X STUD OR BM. PER PLAN.
13. PLYWOOD WHERE OCCURS PER PLAN. APPLY PRIOR TO LOW ROOF INSTALLATION.

NOTE:
- AT CONDITION B LOCATE SIMPSON H2.5A PRIOR TO INSTALLATION OF 2X BLK'G.

HIGH TO LOW ROOF

D0020–131107 **10**

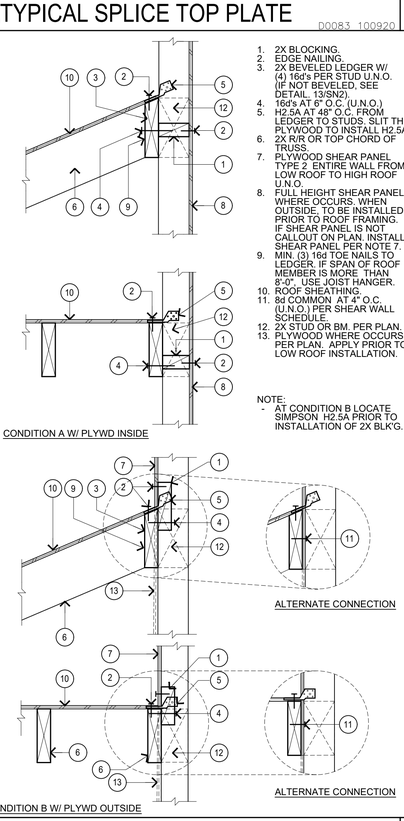

TYPICAL SPLICE TOP PLATE

D0083 100920 **9**

1. 16d SINKER NAILS AT 8" O.C. (5) MIN. EA. SIDE OF SPLICE U.N.O. & PER TABLE BELOW.
2. TYP. STUDS AT 16" O.C.
3. LOCATE STUD UNDER SPLICE OR PROVIDE 2X BLKG. ATTACHED TO ADJACENT STUDS W/ (3) 16d'S EACH SIDE.
4. NUMBER OF NAILS SPECIFIED BETWEEN SPLICING POINTS PER TABLE BELOW.
5. SIMPSON STRAP PER TABLE BELOW.
6. SHIM AS REQUIRED.
7. CONT. LOWER PLATE @ WALL.
8. EXTERIOR WALL. PROVIDE FULL HT. STUD TO RECEIVE STRAP NAILS.
9. ST22 STRAP.

NOTE:
- FULLY NAIL STRAP W/ 16d SINKER OR 10d COMMON
- NAILS SHALL BE STAGGERED & AT LEAST 2 1/4" APART.

	A	B	C	D	E	F	G
NO. OF 16d SINKER	10	16	22	24	32	36	42
MIN. PLATE LAP	4 FT.	4 FT.	6 FT.	6 FT.	8 FT.	8 FT.	8 FT.
ALT. STRAP W/ 16d SINKER	ST22	ST6224	ST6236	MST37	MSTC52	MST60	CMST12x72*

GOUVIS engineering
consulting group, inc.
15 Studebaker
Irvine
CA 92618

Irvine
tel 949.752.1612
fax 949.752.5321

Palm Springs
tel 760.323.5090

REGISTERED PROFESSIONAL ENGINEER DEBAKORN COSAITIL No. S 5226 Exp. 6/30/23 STRUCTURAL STATE OF CALIFORNIA

DATE SIGNED: 2/3/23

RESTRICTIVE NOTICE

THESE DESIGNS, DRAWINGS, AND SPECIFICATIONS ARE THE EXCLUSIVE PROPERTY OF GOUVIS ENGINEERING CONSULTING GROUP. THEY ARE THE SUBJECT OF COPYRIGHT AND OTHER LEGAL PROTECTION. THEY MAY BE USED ONLY BY THEIR INTENDED RECIPIENT AND ONLY FOR THE PROJECT DEPICTED HEREIN. NO PART OF THESE DRAWINGS ARE TO BE COPIED, TRANSFERRED, REPRODUCED, NOR CAN THEY BE USED, IN WHOLE OR IN PART, BY ANY OTHER PERSON OR FOR ANY OTHER PROJECT OR STRUCTURE, WITHOUT THE PRIOR EXPRESS WRITTEN CONSENT OF GOUVIS ENGINEERING CONSULTING GROUP

© 2017 GOUVIS ENGINEERING CONSULTING GROUP INC. - ALL RIGHTS RESERVED

PROJECT:
Tenant Square

DEVELOPER:
Osito Holdings LLC

ARCHITECT:

LOCATION:
Morgan Hill
Santa Clara
CA

REVISIONS

NO.	DATE	DESCRIPTION
1	02/02/23	BLDG DEPT.

SHEET NAME:
GENERAL
DETAILS & NOTES

PROJECT NUMBER:
66074

ENGINEER: GE
DRAFTER: GE

SHEET NUMBER:
SD2

ISSUED DATE: 5/5/2022

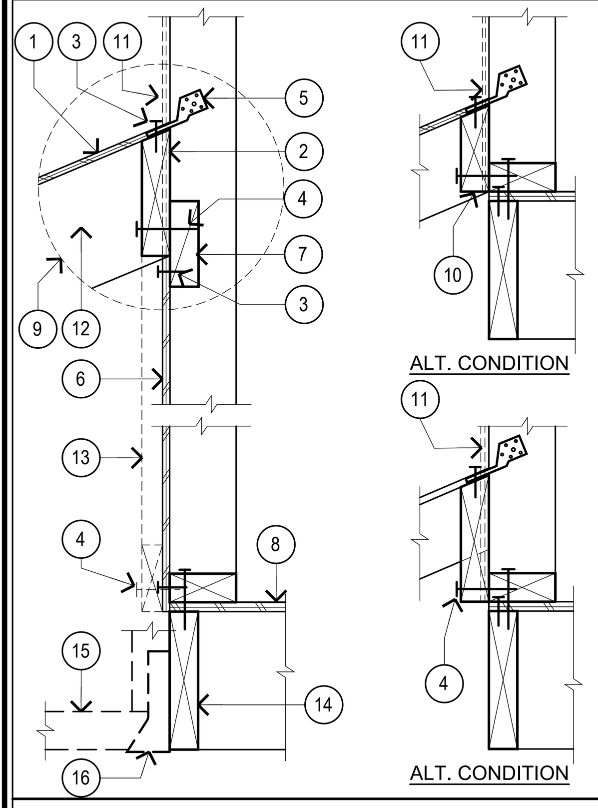

1. ROOF SHEATHING.
2. CONT.2X BEVELED LEDGER W/ (4) 16d's PER STUD U.N.O. (IF NOT BEVELED, SEE DETAIL. 13/SN2) FOR SPLICING OF LEDGER (IF NEEDED) USE (1) CS16 X 24" LONG CENTERED @ SPLICE. SEE 17/SN2 FOR NAIL PATTERN.
3. EDGE NAILING.
4. 16d's @ 6" O.C. (U.N.O.).
5. H2.5A @ 48" O.C. FROM LEDGER TO STUDS.
6. PLYWOOD TYPE 2 ENTIRE LENGTH OF WALL U.N.O.
7. 2X BLOCKING.
8. FLOOR SHEATHING. & FLOOR SYSTEM.
9. FOR ALT. CONNECTIONS SEE DETAIL 10/SD2 CONDITION B.
10. 2X BEVELED BLOCKING AS SHOWN. SEE 13-SN2 FOR NON-BEVELED BLOCK.
11. PLYWOOD SHEAR WALL PER PLAN WHERE OCCURS APPLY PRIOR TO LOW ROOF INSTALLATION.
12. ROOF SYSTEM CAN BE PARALLEL OR PERPENDICULAR TO WALL.
13. SHEAR TRUSS OR TRUSS PANEL BLOCKS TO TRANSFER 380 PLF. CAN BE USED AS ALTERNATE TO PLYWOOD TYPE 2.
14. FLOOR BEAM PER PLAN.
15. TRUSS BOTT. CHORD W/ END WEB WHERE OCCURS.
16. TRUSS HANGER PER TRUSS MANUFACTURER.

FLOOR TO ROOF S.T. — 12

D0046-131107

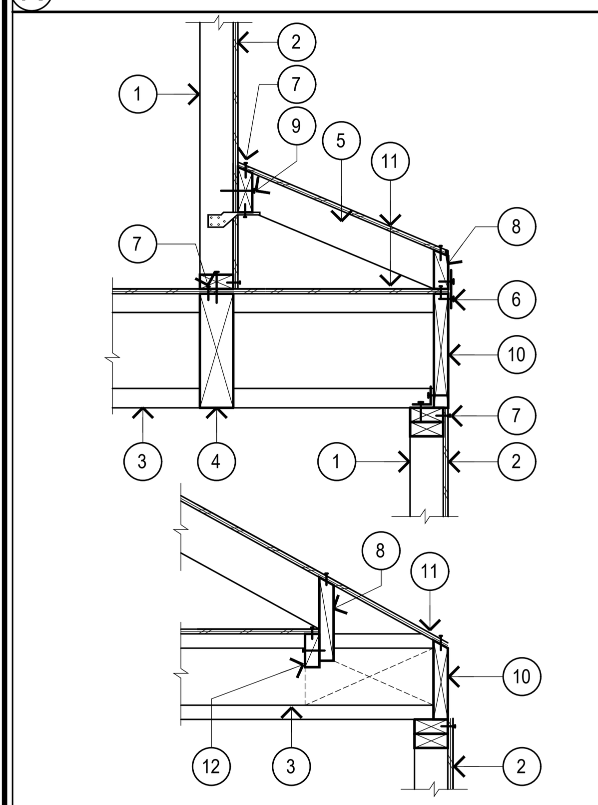

1. 2X STUD WALL.
2. SHEAR PANEL PER PLAN.
3. FLOOR SYSTEM PER PLAN WHEN NOTCHED USE FILLERS.
4. BEAM OR BLK'G. MIN. 1 3/4" WIDE PER PLAN. USE APPROVED HANGER @ FLUSH BEAM CONDITION.
5. 2 X R/R OR JACK TRUSS PER PLAN.
6. LS50 @ 32" O.C.
7. EDGE NAILING.
8. 2X BEVELED BLK'G. W/ E.N., IF NOT BEVELED, SEE 13/SN2.
9. 2X BEVELED LEDGER W/ (3) 16d's TO EACH STUD, IF NOT BEVELED, SEE 13/SN2 ATTACH LEDGER TO STUDS W/ H2.5 AT 48" O.C.
10. BLK'G/RIM JOIST PER PLAN W/ A35's AT 16" O.C. U.N.O. USE LS50/LTP4 IF THE INSTALLATION OF A35 IS IN CONFLICT W/ STEEL STRAP ON TOP PLATES.
11. PLYWOOD SHEATHING.
12. 2X BLK'G. W/ E.N. & W/ (3) 16d's TO BEVELED BLOCK.

SHEAR TRANSFER DETAIL — 13

GE55-120217

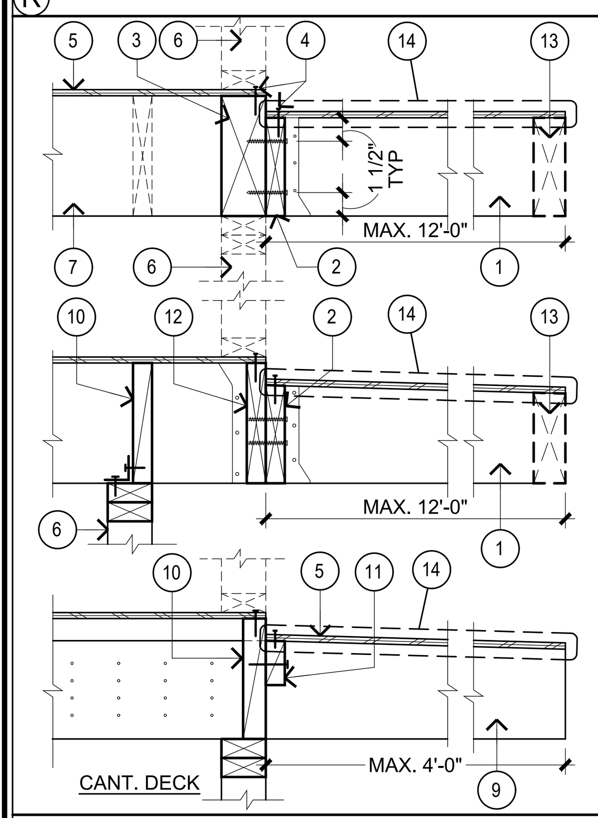

1. DECK W/SLOPE TO DRAIN OR FLOOR JOIST PER PLAN W/ APPROVED JOIST HANGER.
2. 2X LEDGER W/ (2) ROWS OF 1/4" SDS x 3" SCREWS @ 12" O.C.
3. BM. OR RIM JOIST PER PLAN AND PER DETAIL 7/SD3.
4. E.N. TYP.
5. PLYWOOD SHEATHING.
6. WALL OR BM. WHERE OCCURS.
7. FLOOR SYSTEM PER PLANS.
8. 2X NAIL SPACED DECKING WITH (2) 16d's PER CONN. PER ARCH. OR OTHER DETAILS.
9. CANT. JOIST PER PLAN W/ SLOPE TO DRAIN. NAIL TO SIDE OF FLOOR SYSTEM W/ (4) ROWS OF 16d's @ 4" O.C. (NOTE: BACK SPAN TO BE 2x LENGTH OF CANT. DECK U.N.O.)
10. 2X BLOCKING PER DETAIL 7/SD3
11. 2X4 BLOCKING W/ 16d's @ 4" O.C.
12. SUPPORT RIM JOIST FROM CANT. FLOOR JOIST W/ FULL HT. INVERTED "HU" HANGER.
13. FLUSH/DROP BEAM OR WALL PER PLAN.
14. SEE ALT. DECKING BELOW.

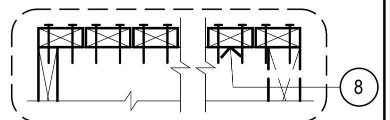

TYPICAL ALT. DECKING

NOTE:
USE PLYWOOD FILLER @ I-JOIST TO RECEIVE HANGER OR OTHER MEMBERS.

CONN. @ FLOOR CHANGE/DECK — 14

GE40-110516

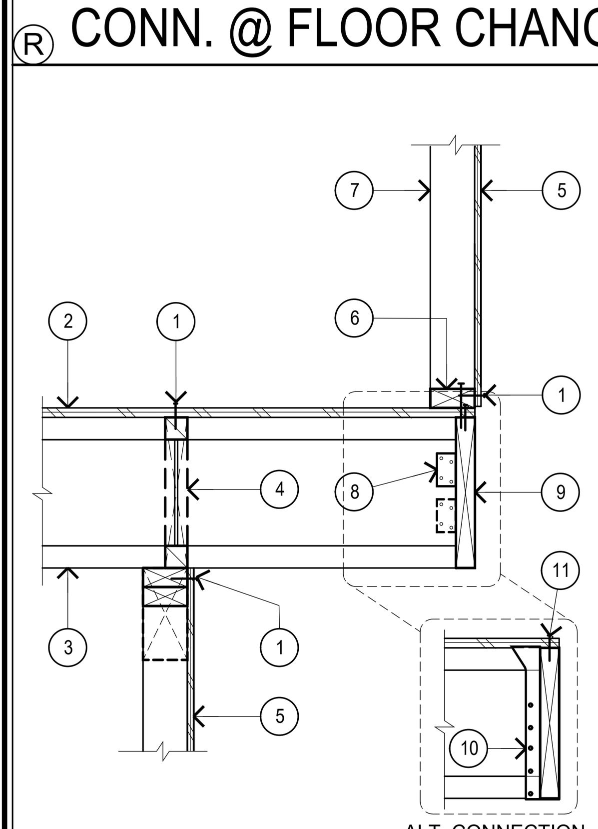

1. EDGE NAILING.
2. FLOOR SHEATHING.
3. FLOOR SYSTEM.
4. 2X MEMBER, 1 1/4" TIMBER STRAND OR I-JOIST BLOCKING PER PLAN. SEE DET. 7/SD3 FOR SHEAR TRANSFER. USE MIN. 2X BLOCKING OR 1 1/4" TIMBER STRAND FULL DEPTH BLOCKING W/ LS50/LTP4 IF THE INSTALLATION OF A35 OR NAILS W/ I-JOIST BLKG. IS IN CONFLICT W/ STEEL STRAP ON TOP PLATES.
5. SHEAR PANEL PER PLAN.
6. 2X SILL PLATE W/ NAILS PER PLAN.
7. 2X STUD WALL.
8. STAGGERED A35 RIM JOIST TO EVERY OTHER JOIST. PROVIDE WEB FILLER W/A35 NAILING.
9. 2x CONT. MEMBER, 1 1/4" TIMBERSTRAND OR LVL.
10. INVERTED IUT HANGER @ EVERY JOIST.
11. E.N. @ 3" O.C. MAX.

SHEAR TRANSFER — 15

GE56-120217

ISSUED DATE: 5/5/2022

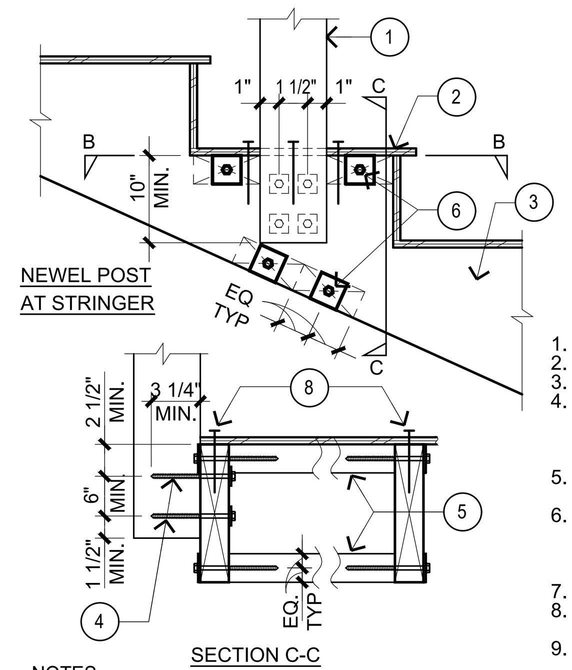

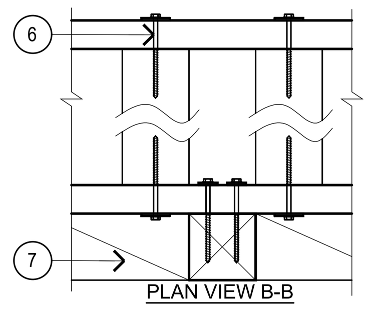

NOTES:
- ALTERNATE TO 1/4"ØX5" LAG SCREWS SIMPSON 1/4"ØX6" SDS SCREWS CAN BE USED. A 3/4" THK FULL BEARING PLYWOOD SHIM IS REQUIRED BETWEEN PLATE WASHER & STRINGER FOR SDS SCREWS TO NEWEL POST.
- VERIFY HEADROOM REQUIREMENT WITH ARCHITECTURAL PLANS & FRAMING LAYOUT PRIOR TO CONSTRUCTION.

1. 4X4 MIN. NEWEL POST AT 8'-0" O.C. MAX.
2. PLYWOOD TREADS.
3. STRINGER PER DET 10/SD3.
4. 1/4"ØX5" LAG SCREWS FROM STRINGER TO NEWEL POST (4) TOTAL W/ PLATE WASHER 1 1/4" SQ. X 3/16" THK.
5. (2) 2X4 FLAT BLOCKING TOP & BOTTOM OF STRINGER (4) TOTAL.
6. 1/4"ØX5" LAG SCREWS FROM STRINGERS' TOP & BOTTOM TO 2X4 FLAT BLOCKINGS (8) TOTAL WITH PLATE WASHER 1 1/4" SQ.X3/16" THK.
7. INFILL BLK'G BETWEEN NEWEL POSTS.
8. (3) 10d NAILS EQUALLY SPACED EA. TREAD TO STRINGER (6) TOTAL.
9. BALUSTER PER ARCHITECT'S DETAIL. CONNECTIONS BY OTHERS (PER MANUF).
10. (2) H2.5A T&B NEWEL POST TO PERIMETER BM.
11. A35 BOTH FACES OF NEWEL POST TO PERIMETER BEAM.
12. PERIMETER BEAM/RIM JOIST PER PLAN.
13. CS18 WRAP AROUND TOP & BOTTOM OF PERIMETER BEAM & 4X4 ADD-ON AND W/ (2) ROWS OF 10d COMMON NAILS @ 2 1/16" O.C. ENTIRE LENGTH. MIN. 16" END LENGTH.
14. 4X4 ADD-ON W/ (9) 16d COM. NAILS @ TOP & BOTT. OF FLOOR JOIST. INSTALL FACE NAILS FROM FLOOR JOIST TO 4X4 ADD-ON.
15. 7/16" DIA. X 4" LONG LAG SCREW WITH WASHER @ 48" O.C. MAX. THROUGH DRY WALL OR PER HANDRAIL MANUFACTURER SPEC.
16. DOUBLE 2X STUDS/4X4 POST @ 4'-0" O.C. MAX.
17. 4X4 BLOCKING @ 4'-0" O.C. MAX. W/ (6) 16d SINKER TOE NAILS @ EA. END. (3) TOP & (3) BOTTOM.
18. (2) 16d SINKER NAILS EACH SIDE OF DOUBLE STUDS (4) TOTAL.
19. FLR. JOIST W/ B.N. ALONG JOIST LENGTH.
20. (2) H2.5A PERIMETER MBR. T&B TO THE IMMEDIATE (DBL) ADJACENT FLOOR JOISTS (4) TOTAL @ EA. DBL. STUD LOCATION.
21. (2) ST18 BOTH EDGES OF STUDS/4X4 (4) TOTAL. NAIL ALL HOLES W/ 16d COMMON NAILS & SLIT CUT SHEATHING FOR STRAP INSTALLATION.
22. 4X NOMINAL (MIN.) FULL DEPTH PERIMETER MEMBER. ALT., PROVIDE DOUBLE RIM JOISTS W/ PLYWOOD SHIM IN BETWEEN.
23. (2) 16d TOE NAILS EA. SIDE OF DBL. STUDS TOP & BOTTOM.
24. DBL. 2X PLATES W/ (2) ROWS OF 10d NAILS @ 12" O.C. STAGG.
25. HANDRAIL BRACKET PER MANUF.
26. 2X ADD-ON W/ (2) ROWS OF 10d FACE NAILS @ 8" O.C. TO FLOOR JOIST IMMEDIATELY ADJACENT TO (DBL) 2X4 STUDS.

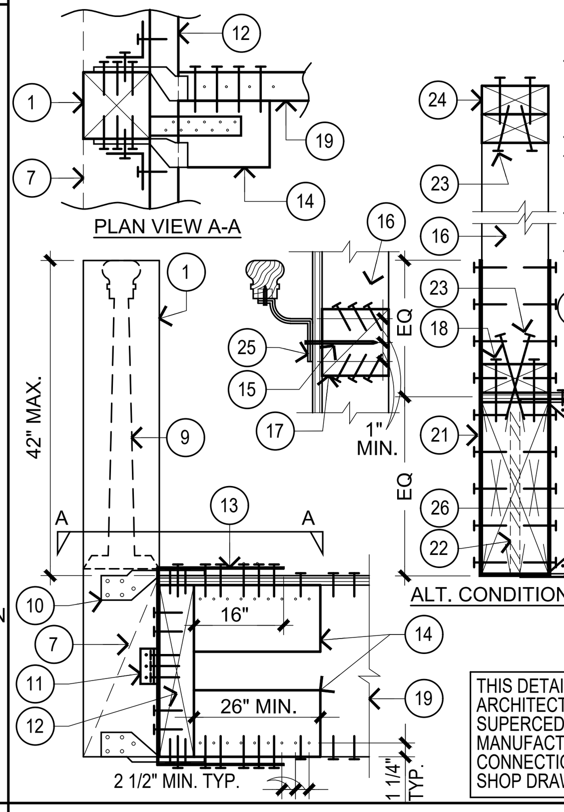

THIS DETAIL IS FOR USE AT NON-PUBLIC AREAS ONLY. ARCHITECTURAL DETAILS MAY BE DIFFERENT AND SHOULD SUPERCEDE THIS DETAIL. PRIOR TO FABRICATION, STAIR MANUFACTURER SHALL SUBMIT STAIRS, RAILINGS, CONNECTIONS AND DETAILS TO GOUVIS ENGINEERING FOR SHOP DRAWINGS REVIEW AND APPROVAL.

HANDRAIL/GUARD RAIL — 9

D0027-160815

NOTE	INSIDE 1 & 2 FAMILY DWELLINGS	EXIT & COMMON AREAS
1.	2X12 @16" O.C. 8'-0" MAX. SPAN. 2X14 @16" O.C. 10'-0" MAX. SPAN. 2X16 @16" O.C. 12'-0" MAX. SPAN. (ALT. 1 3/4"X LSL)	(2) 2X14 @16" O.C. 10'-0" MAX. SPAN. (2) 2X16 @16" O.C. 12'-0" MAX. SPAN. (2) 2X16 @12" O.C. 14'-0" MAX. SPAN. (ALT. (2)-1 3/4"X LSL)
6.	APPROVED METAL HANGER OR (1) A35 EACH SIDE	APPROVED METAL HANGER OR (1) LS90 EACH SIDE
8.	SIMPSON THA213 OR (1) A35 EACH SIDE	SIMPSON THA218-2
11.	5 1/4" MIN. FOR 2X12 7 1/4" MIN. FOR 2X14 9 1/4" MIN. FOR 2X16	7 1/4" MIN. FOR (2) 2X14 9 1/4" MIN. FOR (2) 2X16

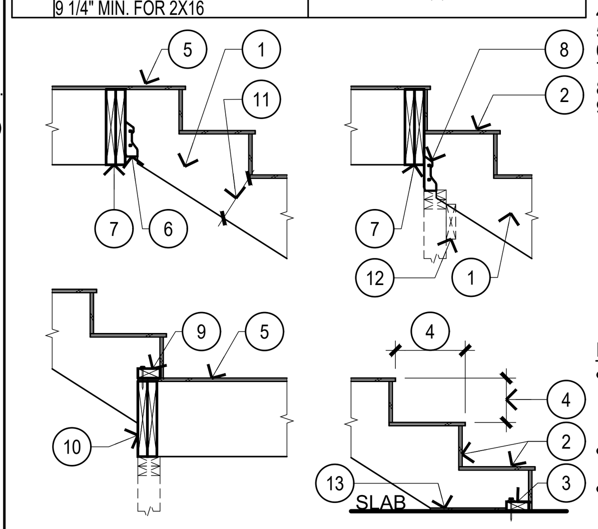

1. SIZES & SPANS, SEE TABLE. (ALT) LSL STRINGERS OF THE SAME SIZES W/ Fb=1700 psi (MIN) Fv=400 psi (MIN) & E=1.3X10^6 psi (MIN) CAN BE USED.
2. PLYWOOD TREADS & RISERS (MIN. 3/4").
3. 2X4 P.T. PLATE (SEE SN1) ANCHORED WITH SIMP. PDPAWL-MG SHOT PINS 0.157Ø W/ 3/4" MIN. EMBED INTO CONC @ 24" O.C. MAX. SECURE STRINGER TO 2X4 PLATE W/ (3) 16d TOE NAILS.
4. PER ARCHITECTURAL.
5. PLYWOOD SUBFLOOR.
6. SEE TABLE.
7. DBL. JOIST OR HEADER.
8. SEE TABLE.
9. CONT. 2X PLATE W/ 16d's @ 8"O.C.
10. DBL. JOIST OR BLOCKING
11. SEE TABLE.
12. 2X6 LEDGER W/ (4) 16d'S PER STUD @ WALL CONDITION.
13. PRESSURE TREATED PLYWOOD SHIM W/ MIN. (2)SIMP. PDPAWL-MG SHOT PINS 0.157Ø W/ 3/4" MIN. EMBED INTO CONCRETE. 22GA SHEET METAL OR WATER PROOF MEMBRANT CAN BE USED AS AN ALTERNATE.

NOTES:
- NO OVER CUT OR OVER NOTCH. STRINGER W/ (3) 16d FACE NAILED TO WALL STUDS @ 16" O.C. COULD BE 2X10.
- MAX. SPANS ARE HORIZONTAL PROJECTION LENGTH.
- CONTACT GOUVIS ENGINEERING FOR SPANS THAT EXCEED MAX. SPAN SHOWN IN TABLE.

STAIR DETAILS — 10

D0002F-220421

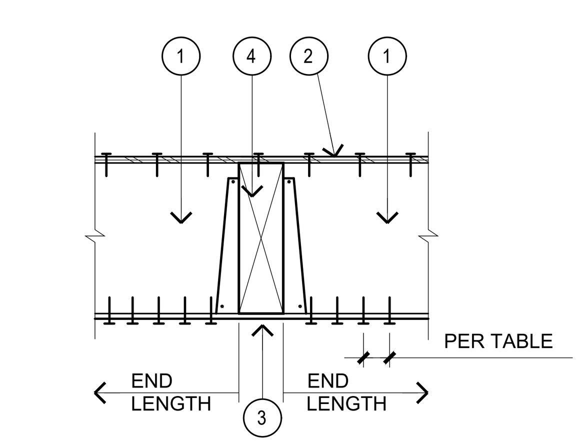

1. DRAG STRUT W/E.N. PER PLANS. IF NOT CONTINUOUS SPLICE PER TABLE BELOW.
2. PLYWOOD SHEATHING W/ E.N.
3. STRAP PER TABLE BELOW. APPLY STRAP ON TOP OF SHEATHING AS AN ALTERNATE.
4. BEAM PER PLAN.

- WHERE STRAP IS APPLIED ON TOP OF SHEATHING, ELIMINATE LINE OF E.N. ALONG LENGTH OF STRAP ONLY.
- MIN. 3 1/2" WIDE MEMBER FOR CONDITION C &D

* MIN. 1 1/2" SPACING BETWEEN ROWS OF NAILS. ADD 2x6xSTRAP LENGTH NEXT TO DRAG ELEMENT TO RECEIVE 2ND. STRAP, NAIL W/ 16d's @ 4" O.C. STAGGERED.

* REFER TO 17/SN2 FOR CS16 NAILING PATTERN.

	STRAP	END LENGTH	NAIL SIZE AND SPACING	CAPACITY
A	CS16	3'-0"	8d BOX/SINKER AT 4 1/8"	1700#
B*	(2) CS16	3'-0"	8d BOX/SINKER AT 4 1/8"	3400#
C	CMSTC16	6'-0"	10d BOX AT 4 1/2"	4585#
D	CMST14	6'-3"	10d BOX AT 3 1/2"	6490#

DRAG DETAIL — 11

D0042 100920

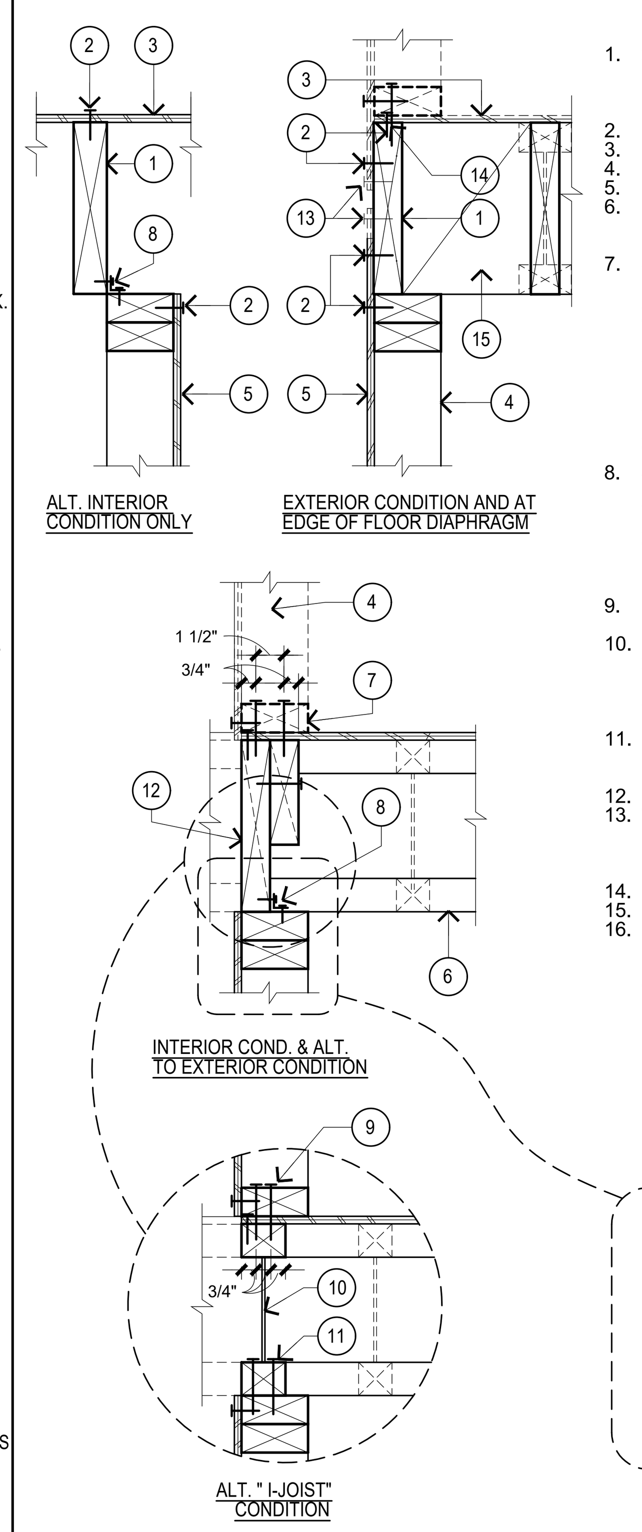

1. 2X MEMBER, 1 1/4" TIMBER STRAND OR L.V.L. CONT. RIM PER PLAN. (USE MIN. 1 1/2" WIDE RIM FOR BLOCKED DIAPHRAGM).
2. BOUNDARY NAILING.
3. FLOOR SHEATHING.
4. STUD WALL WHERE OCCURS.
5. SHEAR PANEL PER PLAN.
6. FLOOR SYSTEM PER PLAN. (CAN BE 2X CONV., I-JOIST OR OPEN WEB FLOOR TRUSS).
7. STAGG. SILL PLATE NAILING. WHERE SPAC'G IS < 6" O.C., PROVIDE 2X NAILER TO RECEIVE NAILS & CONNECT TO RIM W/ 16d SINKER NAILS W/ SAME SPACING AS SILL PLATE NAILING OF S.W. ABOVE. TO AVOID THIS, SPAC'G OF SILL PLATE NAILING CAN BE INCREASED TO MAX. 6" O.C. WHEN USING A CONT. SILL PLATE @ SHEAR WALL ABOVE WITH SAME NUMBER OF NAILS REQ.
8. SIMPSON A35 (Alt. LS50 OR LTP5) EQUALLY SPACED PER SHEAR WALL SCHEDULE/PLANS (AT NON-SHEAR WALL, @ 48" O.C. MAX.). WHEN PLYWOOD EXTENDS TO THE SIDE OF RIM. A35 IS NOT REQUIRED (SEE NOTE 16).
9. STAGG. SILL PLATE NAILING PER SHEAR WALL SCHEDULE.
10. TJI-210 OR EQUIVALENT W/ 2 5/16" WIDE FLANGE. USE HANGERS TO SUPPORT PERPENDICULAR JOISTS SPANNING GREATER THAN OR EQUAL TO 10'-0" (SEE NOTE 16).
11. 10d COMMON NAILS, SPACING SAME AS EDGE NAILS OF SHEAR WALL BELOW.
12. SOLID BLOCKING.
13. WHEN USING 1 1/4" WIDE RIM, INCREASE QUANTITIES OF B.N. 20% FOR 8d NAILS & 30% FOR 10d NAILS. (ALT. USE 1 3/4" MIN. RIM BOARD).
14. 16d STD. S.P. NAILS @ 16" O.C. MIN.
15. BLOCKING, SEE DETAIL 6/SN2.
16. IF THE INSTALLATION OF BOTTOM FLANGE NAILS/A35 TO TOP PLATES IS IN CONFLICT WITH STEEL STRAP ON TOP PLATES, USE MIN. 2X FULL DEPTH BLOCKING WITH LS50/LTP5 PER SHEARWALL SCHEDULE.

SHEAR TRANSFER — 7

D0016-120217

1. LS50 @ EACH CORNER SEE ITEM #12 FOR ALT.
2. LS50 FROM POST/MULTI STUD TO HDR. TOP & BOTTOM. ALT. (1) EACH FACE
3. TYP. 2X FLOAT @ EDGE OF OPENING.
4. FULL HT. POST OR MULTI STUD PER PLAN.
5. 2X TRIMMER W/ 16d @ 8" O.C. TO POST. IF THERE IS NO ROOM FOR TRIMMER, USE HUC (U.N.O.) HANGER TO CONNECT HDR. TO FULL HEIGHT POST & USE ST6236 TO CONNECT HDRS TOGETHER. CENTER STRAP @ POST.
6. 2X WINDOW SILL TYPICAL.
7. OPENING PER ARCHITECTURAL.
8. HEADER PER PLAN EXTEND TO POST.
9. (2) 2X TOP PLATE.
10. APPLY ST6236 CENTERED O/ POST IF WIDTH OF OPENING EXCEEDS 6'-0" & IF THERE IS NO TRIMMER.
11. 2X SILL PLATE TYPICAL (U.N.O.).
12. ALT. LOCATION OF LTP4 (1) EACH FACE OF EACH HDR TO POST.

NOTE:
USE APPROVED HANGER TO CONNECT HDR. TO POST IF THERE IS NO ROOM FOR TRIMMER.

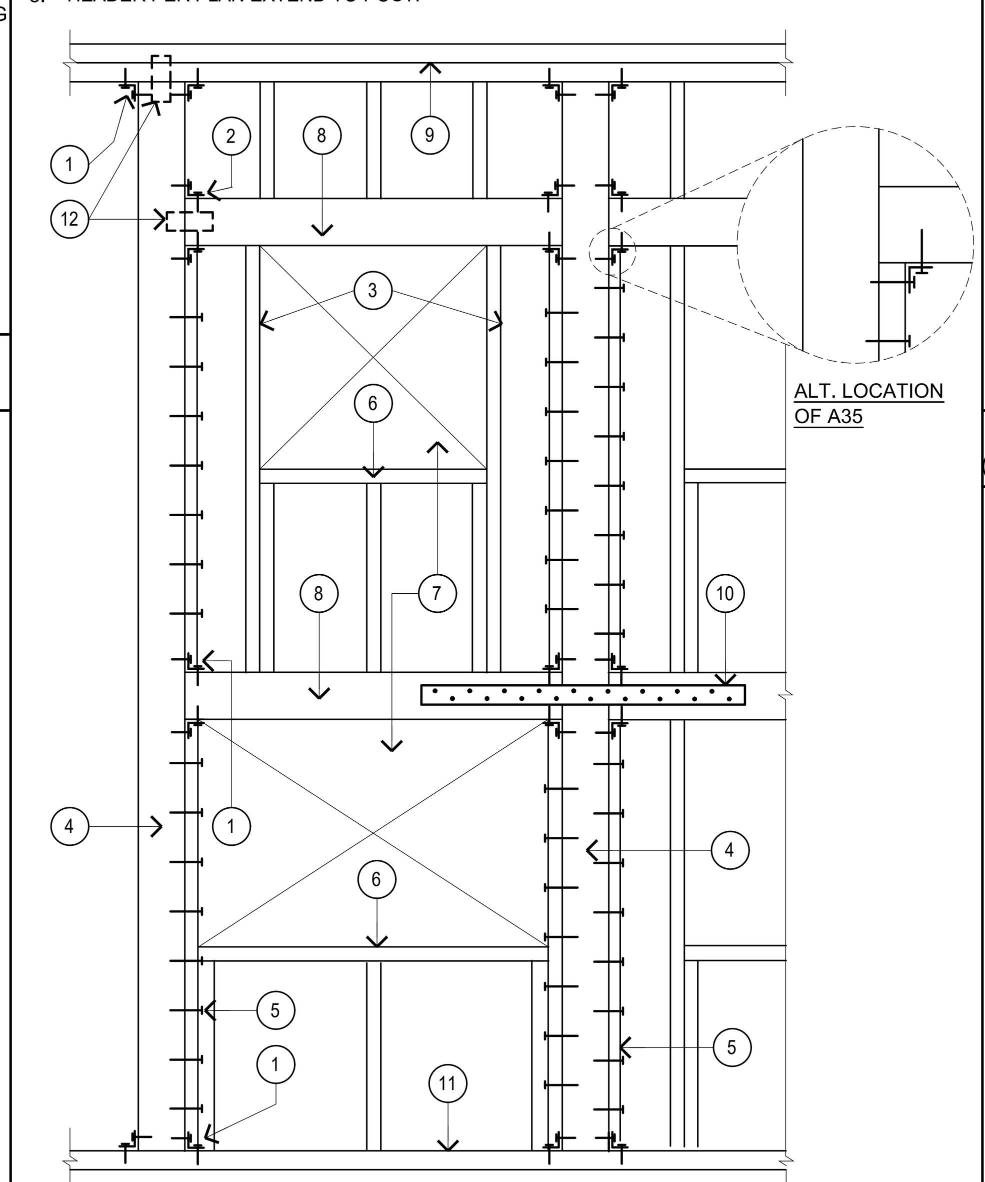

WALL ELEVATION @ OPENING — 8

GE50 100920

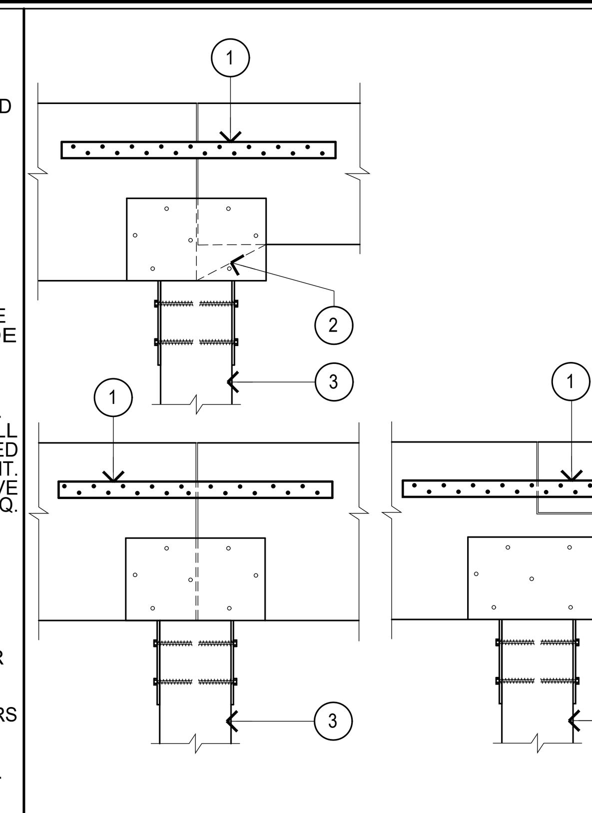

1. CENTERED SIMPSON ST6236
2. PROVIDE SHIM UNDER AND @ THE SIDE OF THE SMALLER BEAM AS REQUIRED.
3. POST W/ SIMPSON CCQ OR CC , SEE PLAN.
4. POST W/ SIMPSON ECCQ OR ECC, SEE PLAN.

NOTES:
- ALIGN BEAMS TO RECEIVE STRAP.
- ALT. LOCATION OF STRAP ON TOP OF BEAMS.

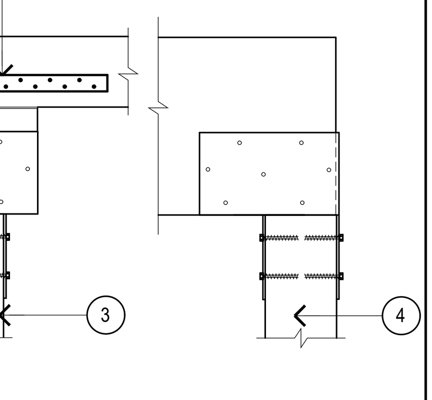

CONNECTION DETAIL — 3

D0043 100920

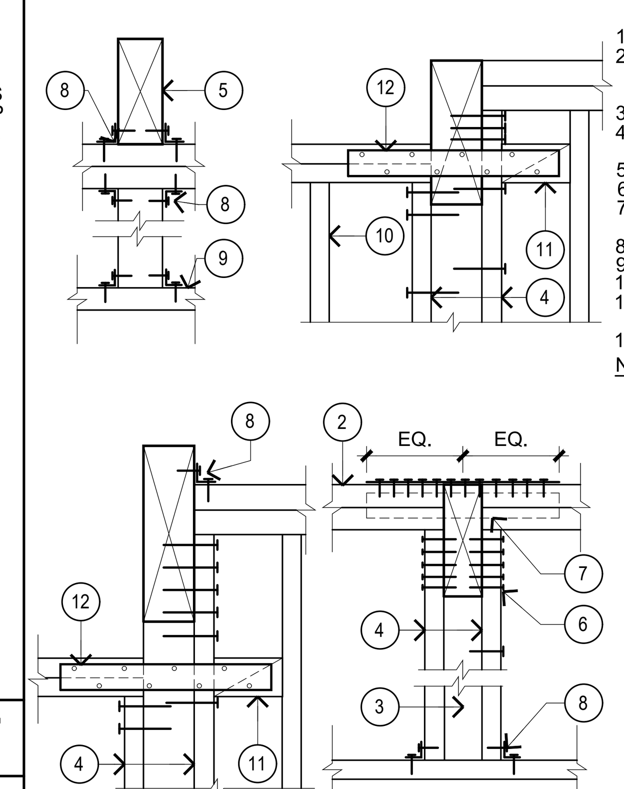

1. BEAM, SEE PLAN FOR SIZE.
2. DBL. TOP PLATE W/ SIMPSON ST6236. IF DBL. TOP PLATE IS CONT., ELIMINATE STRAP.
3. MULTI-STUD OR POST, SEE PLAN.
4. 2X STUD AT EACH SIDE W/ 16d'S AT 12" O.C. STAGGERED.
5. FLUSH BEAM.
6. (5) 16d'S EACH SIDE TO BM.
7. ALT. LOCATION OF STRAP ACROSS SIDE OF TOP PLATE.
8. SIMPSON A34.
9. SILL PLATE.
10. 2X STUDS @ 16" O.C. U.N.O.
11. LINE OF BLK'G. TO RECEIVE STRAP.
12. ST6236 STRAP.

NOTES:
- ADD FILLER @ SIDE OF BEAM AS NEEDED.
- FOR PARTIAL FLUSH BEAM SIMILAR CONDITION. USE (1) A34 EACH SIDE.

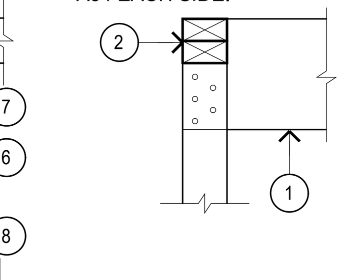

BEAM DETAIL — 4

D0017 100920

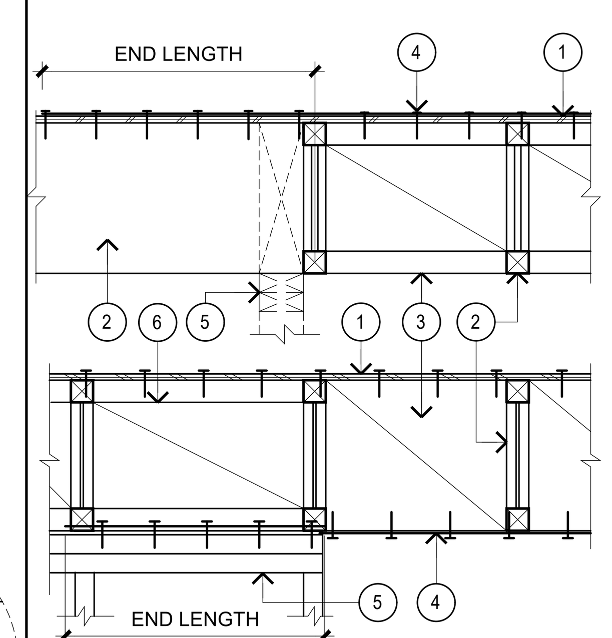

1. PLYWOOD SHEATHING W/ E.N. ALONG LINE OF BLOCKING.
2. TYPICAL JOIST, SEE PLAN.
3. LINE OF SOLID OR MIN 1 3/4" WIDE FULL HT. BLOCKING. SEE PLAN FOR NUMBER OF BAYS. (MIN. 4 BAYS).
4. SIMPSON STRAP CUT TO FIT OVER WALL OR BEAM. PER TABLE BELOW & @ ALL BAYS OF BLOCKING MIN. (3) NAILS PER BLOCKING. (2) ROWS OF NAILS EA. STRAP.
5. DOUBLE TOP PLATE OR BM.
6. USE MIN. 2X FULL HT. BLOCKING W/ LS50/LTP4 IF THE INSTALLATION OF A35 IS IN CONFLICT WITH THE STEEL STRAP ON TOP PLATES.

NOTES:
- USE DOUBLE BLOCKING FOR CONDITION B AND C.
- REFER TO DET. 17/SN2 FOR CS16 NAILING PATTERN.
- TJI BLKG (S) CAN BE USED WHEN STRAP IS APPLIED ON THE TOP.

	STRAP	END LENGTH	NAIL SIZE AND SPACING	CAPACITY*
A	CS16	3'-0"	8d BOX/SINKER AT 4 1/8"	1700#
B	(2) CS16	3'-0"	8d BOX/SINKER AT 4 1/8"	3400#
C	CMSTC16	6'-0"	16d SINKER AT 4 1/2"	4585#

*NAIL LATERAL VALUES BASED ON SPF/HF

DRAG DETAIL — 5

D0084-120217

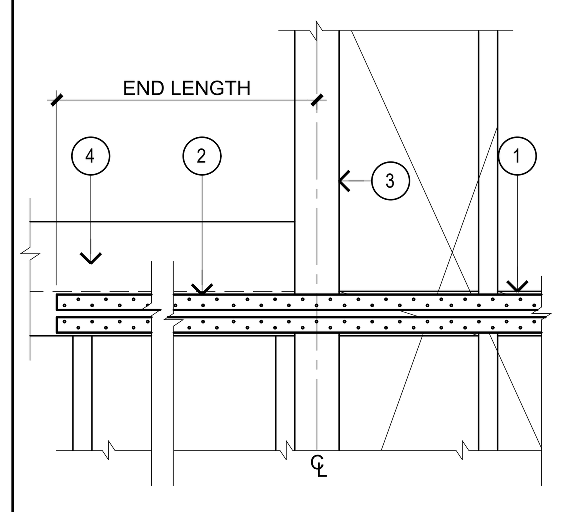

1. 2X BLKG. W/ LINE OF EDGE NAILING ALONG DRAG LINE MINIMUM (4) BAYS U.N.O.
2. SIMPSON CS16 W/ 8d SINKER NAILS AT 2 1/16" O.C.
3. STUD OR POST PER PLAN.
4. BEAM, DRAG TRUSS OR DBL. TOP PLATE.

NOTES:
- USE 2X FLAT BLOCKING FOR CONDITION "B" W/ MIN. 1 1/2" SPACE BETWEEN ROWS OF NAILS.
- LOCATE STRAP OVER PLWD. SHEAR PANEL. SEE PLAN FOR TYPE & LOCATION.
- REFER TO 17/SN2 FOR CS16 NAILING PATTERN.

	STRAP	CAPACITY	END LENGTH
A	(1)CS16	1700#	3'-0"
B	(2)CS16	3400#	3'-0"

DRAG BEAM TO WALL DETAIL — 6

GE2 100920

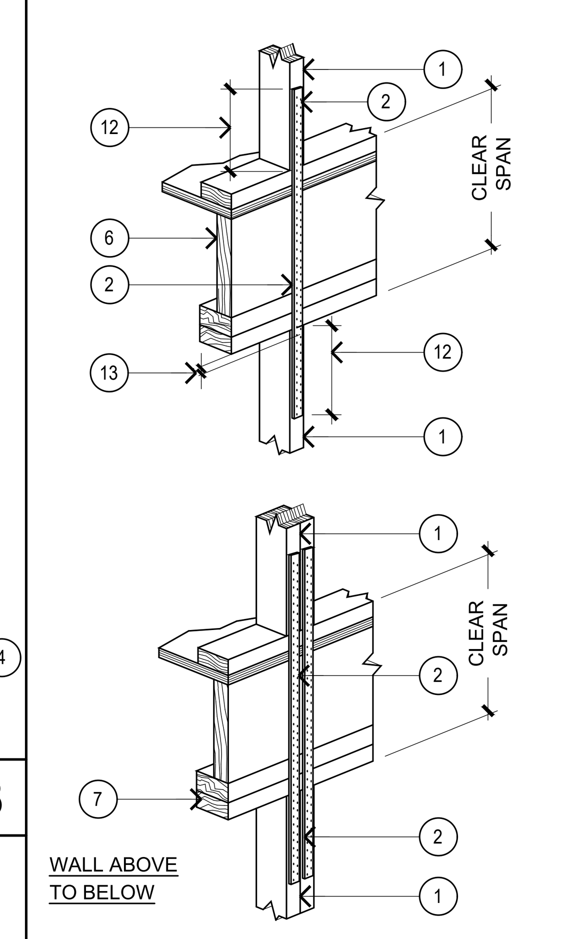

1. STUD, POST OR TRIMMER PER TABLE BELOW. DBL. STUDS & STRAPS @ CONDITION "B"&"C" PROVIDE EDGE NAILING OF SHEAR PANEL ALONG ALL STUDS.
2. REFER TO PLANS & TABLE BELOW FOR STRAP, # OF NAILS & END LENGTH AT EA. END. (2) ROWS OF NAILS EA. STRAP.
3. FLOOR SHTG. SEE PLAN.
4. MIN. 11 1/4" DEEP BM. OR HEADER. SEE PLAN.
5. LINE OF BLKG. UNDER SHEAR WALL.
6. SOLID RIM OR BLKG. SAME WIDTH AS POST ABV. & BLW. @ LOCATION OF STRAP. WHEN W/FLOOR. TRUSS, PROVIDE WEB FILLERS AS NEEDED TO RECEIVE NAILING FROM STRAP.
7. DOUBLE TOP PLATE.
8. 2X SILL PLATE.
9. SEE PLAN FOR SHEAR WALL.
10. CRIPPLE WALL ABOVE HDR. WHERE OCCURS.
11. SOLID BLKG. UNDER POST OR STUDS ABOVE.
12. END LENGTH.
13. PROVIDE MIN. END DISTANCE OF 1 5/8" FOR 16d NAILS.

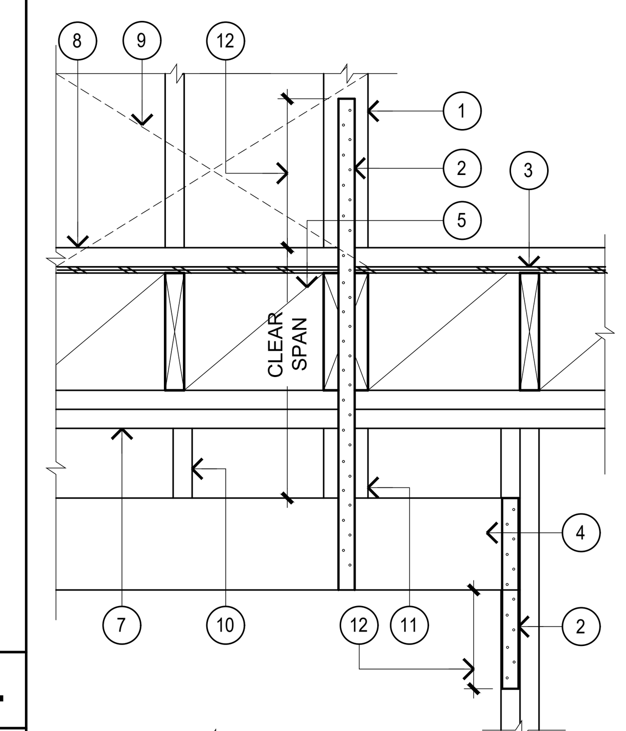

NOTES:
- ALL STRAPS ARE SIMPSON STRONG TIES.
- TOTAL LENGTH OF STRAP TO BE DETERMINED @ THE SITE BASED ON END LENGTH REQUIRED & CLEAR SPAN.
- ALL NAILS ARE SINKER OR BOX NAILS.
- SLIT CUT FLOOR SHEATHING TO RUN STRAP THROUGH @ INTERIOR CONDITION NO OVERCUT.
- LOCATE STRAP OVER PLWD. SHEAR PANEL & PROVIDE SHIM AS NECESSARY TO AVOID BENDING OF THE STRAP
- CLEAR SPAN NAILS ARE RECOMMENDED TO PREVENT BOWING OF STRAP BUT NOT STRUCTURALLY REQUIRED
- PROVIDE EDGE NAILING TO STUDS BELOW IF STUDS ARE WITHIN THE SHEAR WALL(U.N.O)

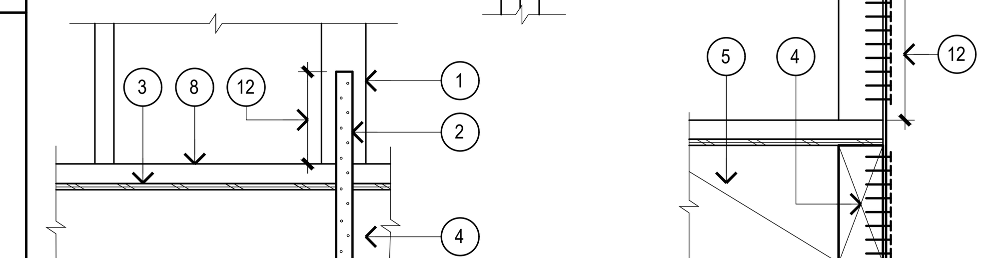

	STRAP	STUD/ POST 2X4 WALL	STUD/ POST 2X6 WALL	# OF NAILS @ EA. END LENGTH	CAPACITY	END LENGTH
A	(1)CS16	2X4	2X6	(11)16d	1700#	13"
B	(2)CS16 **	(2)2X4	(2)2X6	(11)16d P/STRAP	3400#	13"
C	(2)CS14 **	(2)2X4	(2)2X6	(15)16d P/STRAP	4980#	18"
C*	(3)CS14	(3)2X4	(3)2X6	(15)16d P/STRAP	7470#	18"
D	CMST14	4X4	4X6	(40)16d	6475#	38"
E	CMST12	4X6	4X6	(52)16d	9200#	48"
F	(2)CMST14	4X8	6X8	(40)16d P/STRAP	12950#	38"
G	(2)CMST12	6X8	6X8	(52)16d P/STRAP	18400#	48"
H	(4)CS14	4X8	6X8	(15)16d P/STRAP	9960#	18"

* CMST14 & CMST12 ARE ONLY APPLICABLE AT POST TO POST CONNECTION.

** AS AN ALT. TO B & C, USE D FOR POST TO POST CONDITION ONLY.

HOLDOWN DETAIL — 1

D0050-120217

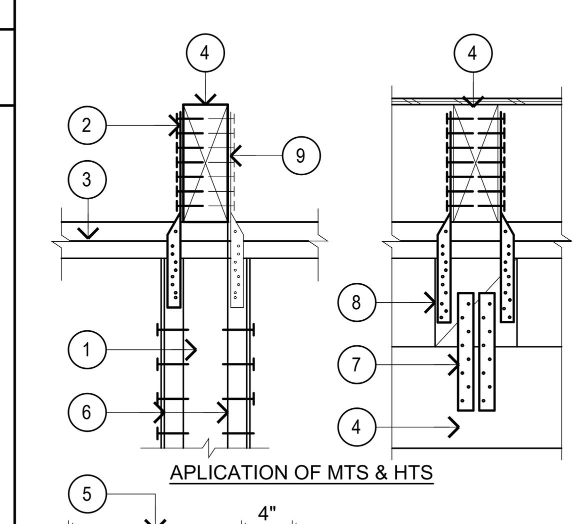

APLICATION OF MTS & HTS

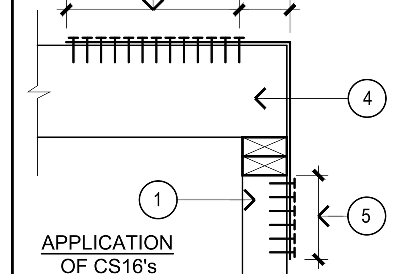

APPLICATION OF CS16's

1. MULTI STUD OR POST.
2. STRAP TYPE, SEE TABLE.
3. DBL. TOP PLATE OR DROP BM. PER PLAN.
4. FLUSH BM/HDR PER PLAN. USE DETAIL 5/SD2 FOR CONNECTION OF BM/HDR TO POST (U.N.O.).
5. END LENGTH = 18". FOR SAWN LUMBER W/ SPACING @ 2 1/16" & 3'-6" FOR MFG'R. PRODUCT W/ SPACING @ 4 1/8" O.C.
6. 2X STUD W/16 d's @ 6" O.C.
7. FOR (2) MTS12 USE (2) ST12, FOR (2) HTS20 USE (2) ST2122 AND FOR (4) HTS20 USE (2) ST6224.
8. MIN. 4X8 SOLID BLOCKING.
9. LOCATION OF THE STRAP CAN BE ON THE BACK END

NOTES:
- USE 10d SINKER FOR MTS12 USE 10d COMMON NAILS FOR HTS20 USE 8d SINKER NAILS FOR CS16's.
- CUT CS STRAP TO MEET MIN. END LENGTH & USE MIN. (16) 8d's @ EACH END OF EACH STRAP.
- PROVIDE 1 1/2" SPACING BTWN ROWS OF NAILS @ MULTIPLE CS STRAPS.
- REFER TO 17/SN2 FOR CS16 NAILING PATTERN.

	STRAP TYPE	ALT.	CAPACITY
A	(1) CS16 ON 2X4	(2) MTS12	1705#
B	(2) CS16 ON 2-2X4	(2) HTS20	2666#
C	(3) CS16 ON 4X6	(4) HTS20	5115#

HOLDOWN DETAIL — 2

D0051-110801

GOUVIS engineering consulting group, inc. ®

15 Studebaker
Irvine
CA 92618

Irvine
tel 949.752.1612
fax 949.752.5321

Palm Springs
tel 760.323.5090

REGISTERED PROFESSIONAL ENGINEER — DISSAKORN EOSAKUL — No. S 5226 — Exp. 6/30/23 — STRUCTURAL — STATE OF CALIFORNIA

DATE SIGNED: 2/3/23

RESTRICTIVE NOTICE

THESE DESIGNS, DRAWINGS, AND SPECIFICATIONS ARE THE EXCLUSIVE PROPERTY OF GOUVIS ENGINEERING CONSULTING GROUP. THEY ARE THE SUBJECT OF COPYRIGHT AND OTHER LEGAL PROTECTION. THEY MAY BE USED ONLY BY THEIR INTENDED RECIPIENT AND ONLY FOR THE PROJECT DEPICTED HEREIN. NO PART OF THESE DRAWINGS ARE TO BE COPIED, TRANSFERRED, REPRODUCED, NOR CAN THEY BE USED, IN WHOLE OR IN PART, BY ANY OTHER PERSON OR FOR ANY OTHER PROJECT OR STRUCTURE, WITHOUT THE PRIOR EXPRESS WRITTEN CONSENT OF GOUVIS ENGINEERING CONSULTING GROUP

© 2017 GOUVIS ENGINEERING CONSULTING GROUP INC. - ALL RIGHTS RESERVED

PROJECT:
Tenant Square

DEVELOPER:
Osito Holdings LLC

ARCHITECT:

LOCATION:
Morgan Hill
Santa Clara
CA

REVISIONS

NO.	DATE	DESCRIPTION
1	02/02/23	BLDG DEPT.

SHEET NAME:
STRUCTURAL DETAILS

PROJECT NUMBER:
66074

ENGINEER: GE
DRAFTER: GE

SHEET NUMBER:
SD3

8. DOUBLE TOP PLATE.
9. LSS0 @ 16" O.C. (ALT. LTP4, A35) INSTALL AFTER ROOFING IS IN PLACE.
10. COMPRESSION BLOCKING

NOTES:
- REFER TO 17/SN2 FOR CS16 NAILING PATTERN.
- STRAP TO EXTEND ON ALL BLKG. (MIN. 3-BAYS).
- USE DOUBLE BLOCKING OR FLAT BLOCKS FOR CONDITION B.
- USE SINKER AT STRAPS.
* NAIL LATERAL VALUES BASED ON SPF/HF.

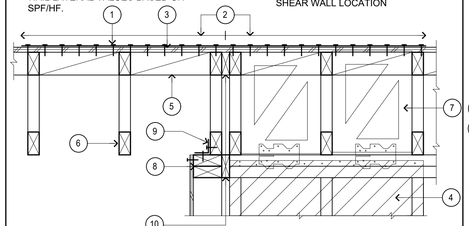

	STRAP	END LENGTH	NAIL SIZE & SPACING	CAPACITY*
A	CS16	3'-6"	(2) ROWS 8d @ 4 1/8"	1700#
B	(2) CS16	3'-6"	(2) ROWS 8d @ 4 1/2"	3400#

1. CS16 STRAP TO BE APPLIED OVER ENTIRE LENGTH OF LINE OF BLOCKING MIN. (3) NAILS TO EACH BLOCK. SEE PLAN FOR EXTENT OF LINE OF BLOCKING AND SHEAR TRANSFER DETAIL TO DOUBLE TOP PLATES.
2. END LENGTH.
3. PLYWOOD SHEATHING.
4. SHEAR WALL, SEE PLAN
5. 2X BLOCKING ON EDGE W/ E.N. OR FLAT BLOCKING.
6. TRUSSES.
7. TRUSS BLKG OR FULL HT BLKG @ SHEAR WALL LOCATION

Ⓡ DRAG DETAIL

10

1. (2) 2X CONT. TOP PLATE.
2. MAX. 7/8" SHIM AS REQUIRED.
3. ATTACH WSWH-TP (BY MANUF.) TO FRAMING & WSWH PANEL W/ SCREWS PER SCHEDULE W/SDS25600 & SWS16150 SCREWS ALIGN PLATE NOTCHED WITH BOTTOM OF TOP PLATES
4. NO HOLES ALLOWED IN TOP 8" OF PANEL.
5. FOR 2X6 FRAMING , INSTALL THE PANEL FLUSH TO THE OUTSIDE FACE OF THE FRAMING & ADD FURRING TO OPPOSITE FACE AS REQUIRED TO ACCOMMODATE FINISH MATERIAL
6. SIMPSON STRONG-WALL HIGH STRENGTH WOOD SHEAR WALL
7. MINIMUM TRIM HEIGHT FOR ALL PANEL IS 74 1/2"
8. HOLD DOWN PER MANUF.
9. NO FACE HOLE ALLOWED IN LOW 46" OF PANEL. SEE SIMPSON WSWH STANDARD PAGE FOR TRIM ZONE & ALLOWABLE HOLES(10/WSWH2)
10. (2)#5 TOP & (2)#5 BOTT. x4'-0" W/ #3 STIRRUP @ 12" O.C. PAST HOLDOWN EA. WAY TYP., U.N.O. ON PLAN. EXTEND EXCESS INTO SIDE FOOTING.
11. FOUNDATION PER PLAN. DEEPEN FOOTING AS REQUIRED TO ACHIEVE de ≥ 3" MIN. CONC COVER.
12. SHEAR REINF. PER SCHEDULE FOR EXT. FOOTING AND FOOTING STEM ONLY.
13. SWS16150 SCREW(PER SCHEDULE)
14. EXT. FTG OR FTG STEM WHERE OCCURS.
15. 1 1/2" MIN. CLEAR OR EPOXY COATED
16. CURB/STEMWALL, 8" MIN.
17. CONT.18" WIDE x24" DEEP GRADE BEAM UNDER WSWH AND EXTENDS 4'-6" PASS HOLDOWN @ BOTH WALL ENDS U.N.O. ON PLAN.
18. (7) #4 GRADE 60 CLOSED TIES @ WSWH12/ WALL. FOR WSWH18 & WSWH24 (4) #4 GRADE 60 CLOSED TIES PER EACH ANCHOR BOLT
19. WASHER PLATE W/ DOUBLE HEAVY HEX NUTS W/WSWH-AB HS PER SIMPSON MANUFACTURER.
20. HOLDOWN BOLT PER "WSWH-AB HS" WITH HEAVY HEX NUT & HEAVY BEARING PLATE.
21. SDS25600 SCREW(PER SCHEDULE)
22. 1/4" DIA. BY 1/4" DEEP COUNTER BORE

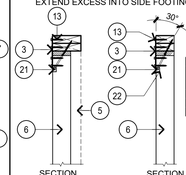

SECTION 6x FRAMING

SECTION 4x FRAMING

NOTES:
- ALL ANCHOR BOLTS ARE HIGH STRENGTH BOLTS.
- MINIMUM DISTANCES FROM ANCHOR BOLT PLATE WASHER TO TOP & BOTTOM OF CLOSED TIE REINFORCEMENT ARE 13" & 5" RESPECTIVELY

MODEL	SCHEDULE WSWH-TP SDS25600 SCREWS	WSWH-TP SWS16150 SCREWS	BOLT (Φ)	de	SHEAR REINF. GR 60 REBAR (MIN.)	Lh FOR HAIRPIN
WSWH12	8	14	1"	16"	(1)-#3 HAIRPIN	10 1/4"
WSWH18	10	26	1"	16"	(1)-#3 HAIRPIN	15"
WSWH24	14	46	1"	16"	(2)-#3 HAIRPIN	19"

- FOR SHEAR TRANSFER DETAILS, SEE 1/SD2, 2/SD2, 3/SD2 , OR 7/SD3 U.N.O.

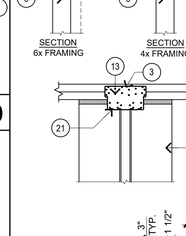

Ⓡ H.S. WOOD STRONG WALL

GE144-210426

7

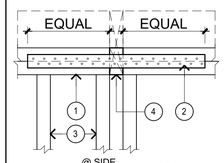

@ SIDE

1. DOUBLE TOP PLATE OR BEAM, WHERE OCCUR
2. SIMPSON ST6236
3. STUD WALL
4. 2X COMPRESSION MEMBER
5. BEAM, PER PLAN
6. POST, PER PLAN

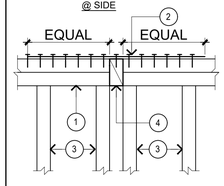

@ TOP

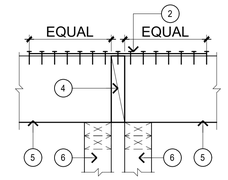

@ TOP OF BEAM

DR-PW-4

DRAG DETAIL @ PARTY WALL

8

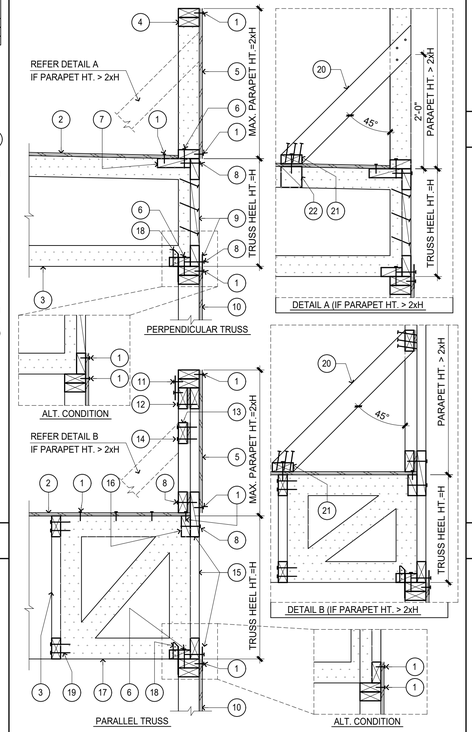

1. E.N.
2. ROOF SHEATHING
3. ROOF TRUSS PER PLAN
4. DOUBLE 2X TOP PLATE
5. SHEAR PANEL TYPE 1
6. MIN. 2X4 BLK'G W/ 16d's @ 4" O.C. TO MIN. 2X6 BLK'G OR TOP PLATE
7. MIN. 2X6 FLAT BLK'G W/E.N.
8. 16d's SINKER NAILS @ 4" O.C.
9. TRUSS PANEL BLK'G TO TRANSFER 200 PLF FROM TOP CHORD TO BOTTOM DESIGNED BY TRUSS MANUF. & 16d's AT 4" O.C. TO ADJACENT TRUSS W/ (1) LS50 PER PANEL BLK'G TO TOP PLT.
10. SHEAR PANEL PER PLAN
11. DOUBLE 2X TOP PLATE W/ LTP4 @ 48" O.C.
12. 16d's SINKER NAILS @ 8" O.C.
13. 2X HORIZ. RIBBONS @ 24" O.C. W/ FURRING AS SHOWN
14. 2 - 16d's SINKER NAILS TO EACH WEB TRUSS
15. SHEAR TRUSS TO TRANSFER 200 PLF FROM TOP CHORD TO BOTTOM U.N.O. DESIGNED BY TRUSS MANUF W/ 2X8 WEB TRUSS BLK'G ALONG WITH ROOF LEVEL FOR POSITIVE NAILING AS SHOWN & LS50 AT 24" O.C. TO TOP PLATE
16. 2X BLK'G
17. TRUSS PANEL BLK'G AT 48" O.C. TO TRANSFER 200 PLF FROM TOP CHORD TO BOTTOM DESIGNED BY TRUSS MANUF. W/ E.N. AT ROOF LEVEL
18. SIMP. H1 AT EACH TRUSS OR TRUSS PANEL BLK'G TO TOP PLATE
19. 2 - 16d's AT TOP & BOTTOM
20. 2X4 DIAGONAL @ 24" O.C. W/ (3) 16d's AT EACH END AS SHOWN
21. 2X4 SPREADER W/ 16d's AT 6" O.C. TO 4X BLK'G OR TRUSS
22. 4X4 BLK'G W/ (3) 16d's AT EACH END TO TRUSS TOP CHORD

ROOF TRUSS TO WALL WITH PARAPET

5

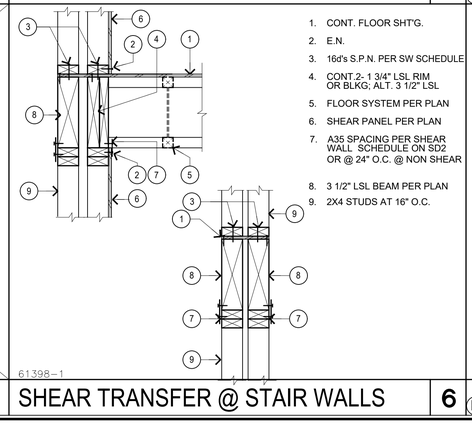

61398-1

1. CONT. FLOOR SHT'G.
2. E.N.
3. 16d's S.P.N. PER SW SCHEDULE
4. CONT 2- 1 3/4" LSL RIM OR BLKG; ALT. 3 1/2" LSL
5. FLOOR SYSTEM PER PLAN
6. SHEAR PANEL PER PLAN
7. A35 SPACING PER SHEAR WALL SCHEDULE ON SD2 OR @ 24" O.C. @ NON SHEAR
8. 3 1/2" LSL BEAM PER PLAN
9. 2X4 STUDS AT 16" O.C.

SHEAR TRANSFER @ STAIR WALLS

6

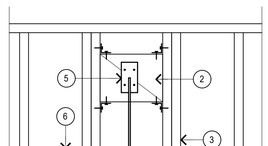

1. 2X STUD PER PLAN.
2. MIN. 4X6 BLKG TO MEET BRACKET PLATE DIMENSION W/A35 TOP & BOTT. BOTH SIDES.
3. MIN. 2-PLY MANUF. ROOF TRUSS WITH PARAPET.
4. MIN. 4X BLK'G AS REQUIRED FOR CANOPY CONN. PER MANUF.
5. CANOPY AND CONNECTIONS AT RIM BM/BLK'G PER MANUF.
6. ROOF SHEATHING BEYOND.

GE71

ROOF CANOPY CONNECTION

1

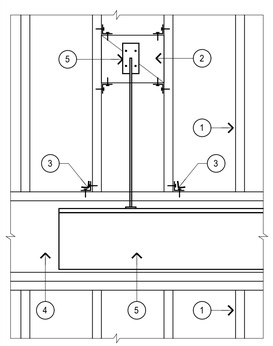

1. 2X STUD PER PLAN.
2. MIN. 6X6 BLKG TO MEET BRACKET PLATE DIMENSION W/A35 TOP & BOTT. BOTH SIDES.
3. A35 TOP & BOTT. TO TOP & SILL PLATES FOR THE STUD AT EACH SIDE OF THE BLK'G CONNECTION.
4. CONT. RIM BEAM PER PLAN.
5. CANOPY AND CONNECTIONS AT RIM BM/BLK'G PER MANUF.

GE71

FLOOR CANOPY CONNECTION

2

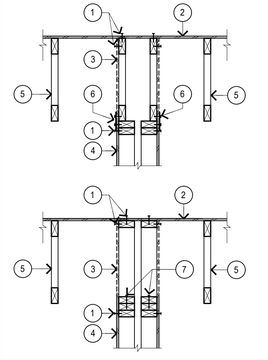

1. EDGE NAILING
2. ROOF SHEATHING
3. SHEAR TRUSS/BOXED TRUSS DESIGNED BY TRUSS ENGINEER TO TRANSFER LOADS FROM TOP CHORD TO BOTTOM PER PLAN. ALT. TO SHEAR TRUSS APPLY PLYWD. TO SIDE OF TRUSS W/ VERT. FRAMING MEMBERS @ 16" O.C.
4. SEE PLAN FOR TYPE.
5. TYPICAL TRUSSES
6. LS50 (ALT. LTP5) SPACED PER SHEAR WALL SCHEDULE INSTALL AFTER ROOFING IS IN PLACE STAGGERED
7. STAGGERED 16d's SINKER NAILS PER SILL PLATE NAILING OF SHEAR WALL SCHEDULE

S. T. @ PARTY WALLS

GE69 102020

3

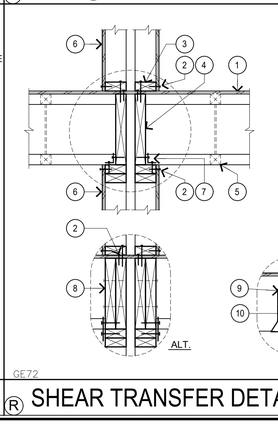

1. CONT. FLOOR SHT'G.
2. E.N. TYP.
3. 16d's S.P.N. PER SW SCHEDULE.
4. CONT. TIMBERSTRAND OR LVL PER PLANS.
5. FLOOR SYSTEM PER PLAN.
6. SHEAR PANEL PER PLAN.
7. A35 SPACING PER SHEAR WALL SCHEDULE ON SD2.
8. BLK'G. OR CONT. MEMBER PER ARCHITECTURAL SCABBED W/ 16d's 8" O.C. STAGGERED. IF BLK'G. IS @ EDGE USE LTP5 PER SHEAR WALL SCHEDULE ON SD2.
9. APPROVED HANGER.
10. SOLID FULL DEPTH BM. MIN. 4x10 W/LTP5 OR LS50 @ PERPENDICULAR CONDITION PER SHEAR WALL SCHEDULE.
11. BALOON FRAME WALL @ PARALLEL CONDITION.

GE72

Ⓡ SHEAR TRANSFER DETAIL

4

ISSUED DATE: 5/5/2022

GOUVIS engineering
consulting group, inc.

15 Studebaker
Irvine
CA 92618

Irvine
tel 949.752.1612
fax 949.752.5321

Palm Springs
tel 760.323.5090

REGISTERED PROFESSIONAL ENGINEER
DRAKORN COSAVUL
No. S 5226
Exp. 6/30/23
STRUCTURAL
STATE OF CALIFORNIA

DATE SIGNED: 2/3/23

RESTRICTIVE NOTICE

THESE DESIGNS, DRAWINGS, AND SPECIFICATIONS ARE THE EXCLUSIVE PROPERTY OF GOUVIS ENGINEERING CONSULTING GROUP. THEY ARE THE SUBJECT OF COPYRIGHT AND OTHER LEGAL PROTECTION. THEY MAY BE USED ONLY BY THEIR INTENDED RECIPIENT AND ONLY FOR THE PROJECT DEPICTED HEREIN. NO PART OF THESE DRAWINGS ARE TO BE COPIED, TRANSFERRED, REPRODUCED, NOR CAN THEY BE USED, IN WHOLE OR IN PART, BY ANY OTHER PERSON OR FOR ANY OTHER PROJECT OR STRUCTURE, WITHOUT THE PRIOR EXPRESS WRITTEN CONSENT OF GOUVIS ENGINEERING CONSULTING GROUP

© 2017 GOUVIS ENGINEERING CONSULTING GROUP INC. - ALL RIGHTS RESERVED

PROJECT:
Tenant Square

DEVELOPER:
Osito Holdings LLC

ARCHITECT:

LOCATION:
Morgan Hill
Santa Clara
CA

REVISIONS

NO.	DATE	DESCRIPTION
1	02/02/23	BLDG DEPT.

SHEET NAME:
STRUCTURAL DETAILS

PROJECT NUMBER:
66074

ENGINEER: GE
DRAFTER: GE

SHEET NUMBER:
SD4

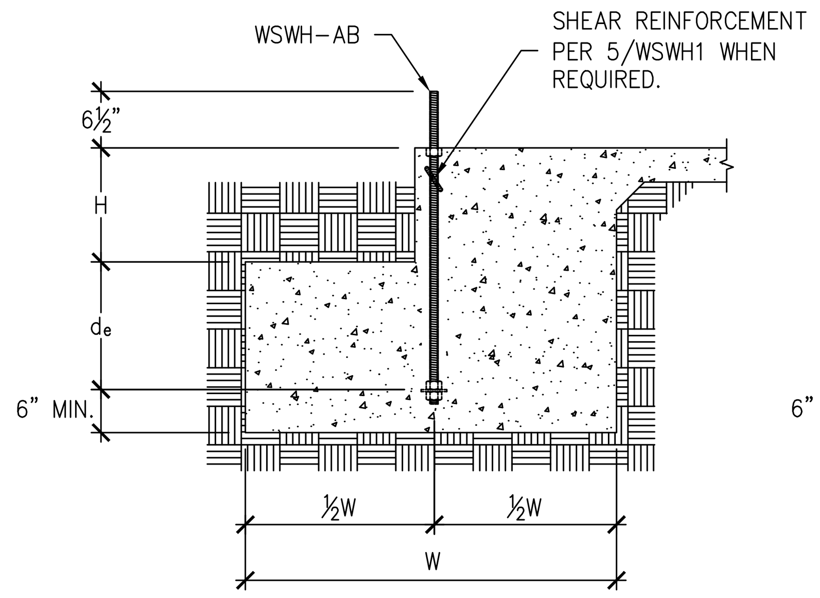

SLAB ON GRADE FOUNDATION

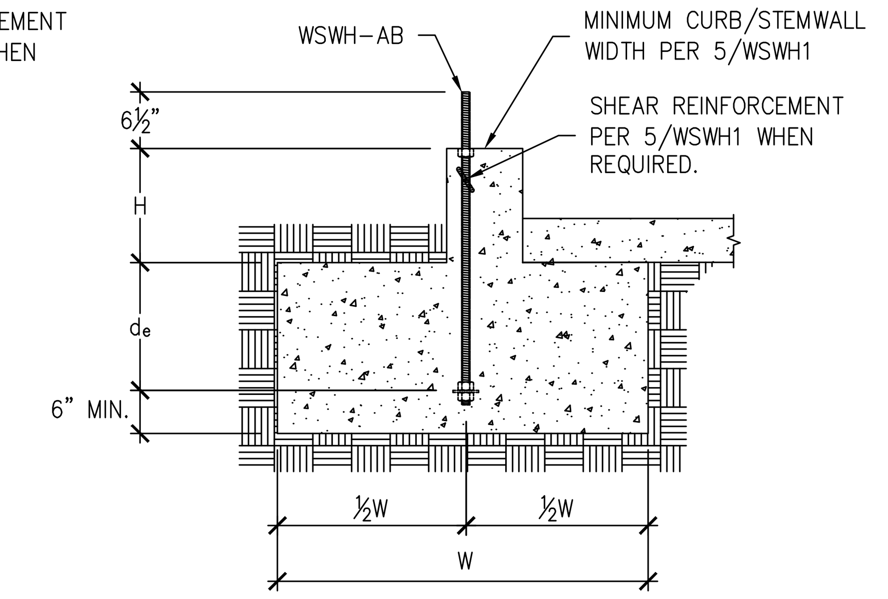

CURB OR STEMWALL FOUNDATION

NOTES :
1. SEE 2/WSWH1 FOR DIMENSIONS AND ADDITIONAL NOTES.
2. SEE 5/WSWH1 FOR SHEAR REINFORCEMENT WHEN REQUIRED.
3. MAXIMUM H = $l_e - d_e$. SEE 3/WSWH1 AND 4/WSWH1 FOR l_e.

DESIGNER IS PERMITTED TO MODIFY DETAILS FOR SPECIFIC CONDITIONS.

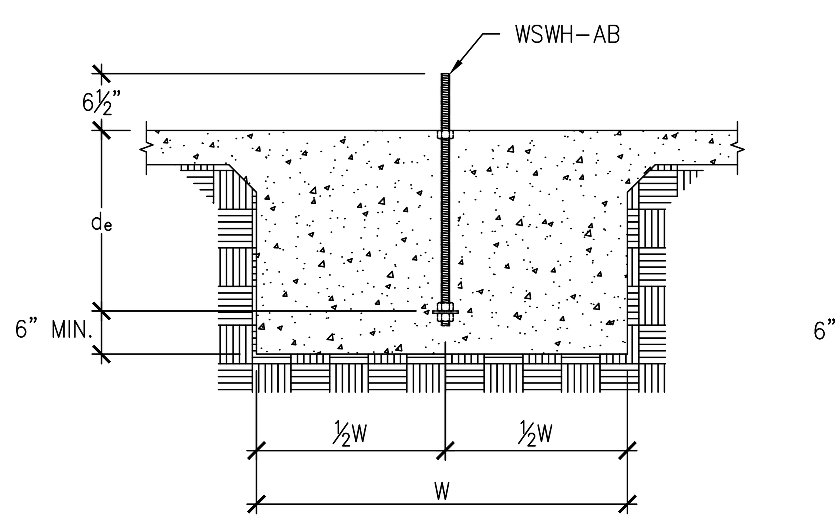

INTERIOR FOUNDATION

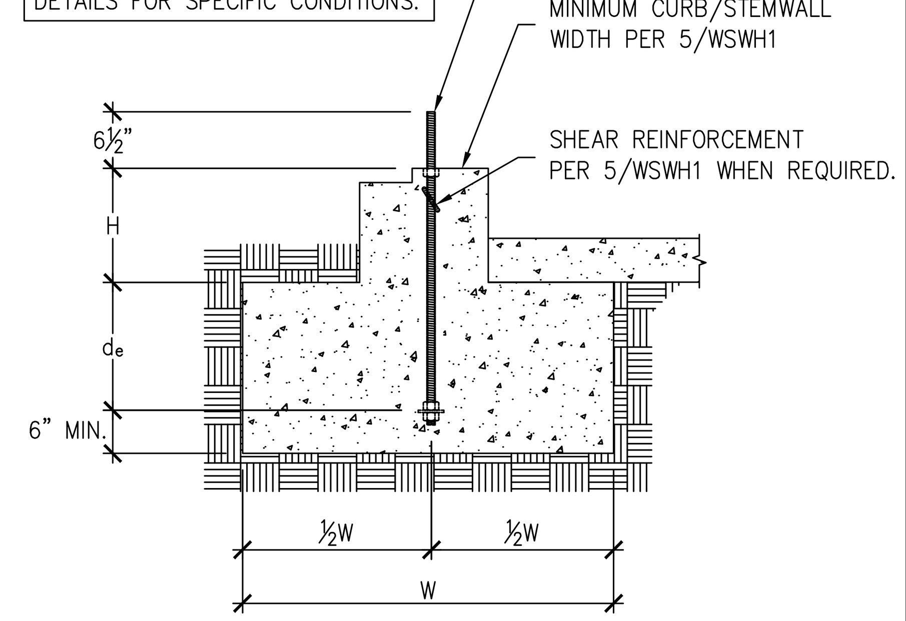

BRICK LEDGE FOUNDATION

STRONG–WALL® WSWH ANCHORAGE – TYPICAL SECTIONS 1

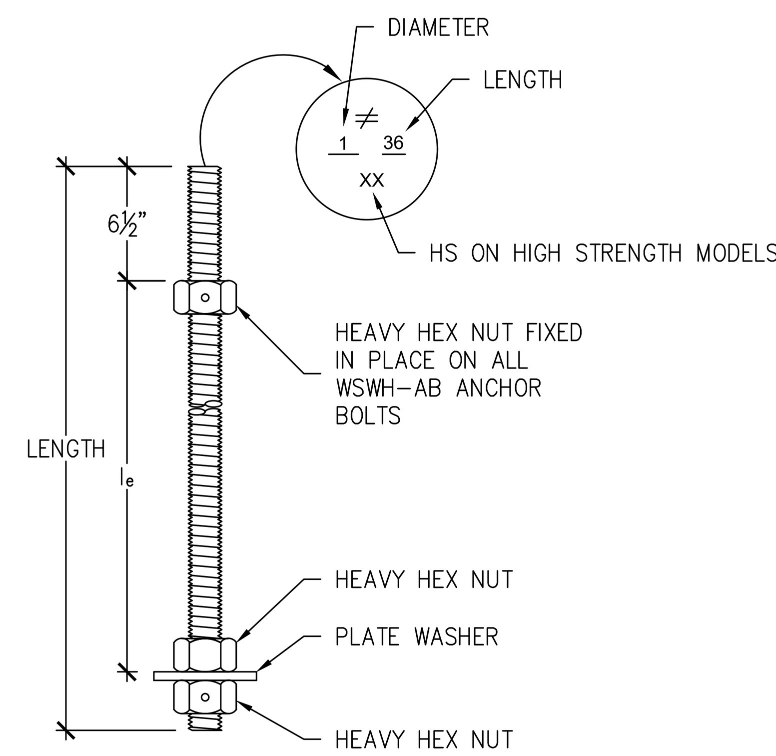

WSWH PANEL MODEL	MODEL NO.	DIAMETER	LENGTH	l_e
WSWH12, WSWH18 AND WSWH24	WSWH–AB1x24	1"	24"	15½"
	WSWH–AB1x24HS	1"	24"	15½"
	WSWH–AB1x30	1"	30"	21½"
	WSWH–AB1x30HS	1"	30"	21½"
	WSWH–AB1x36	1"	36"	27½"
	WSWH–AB1x36HS	1"	36"	27½"
	WSWH–AB1x42	1"	42"	33½"
	WSWH–AB1x42HS	1"	42"	33½"
	WSWH–AB1x48	1"	48"	39½"
	WSWH–AB1x48HS	1"	48"	39½"

WSWH ANCHOR BOLTS 3

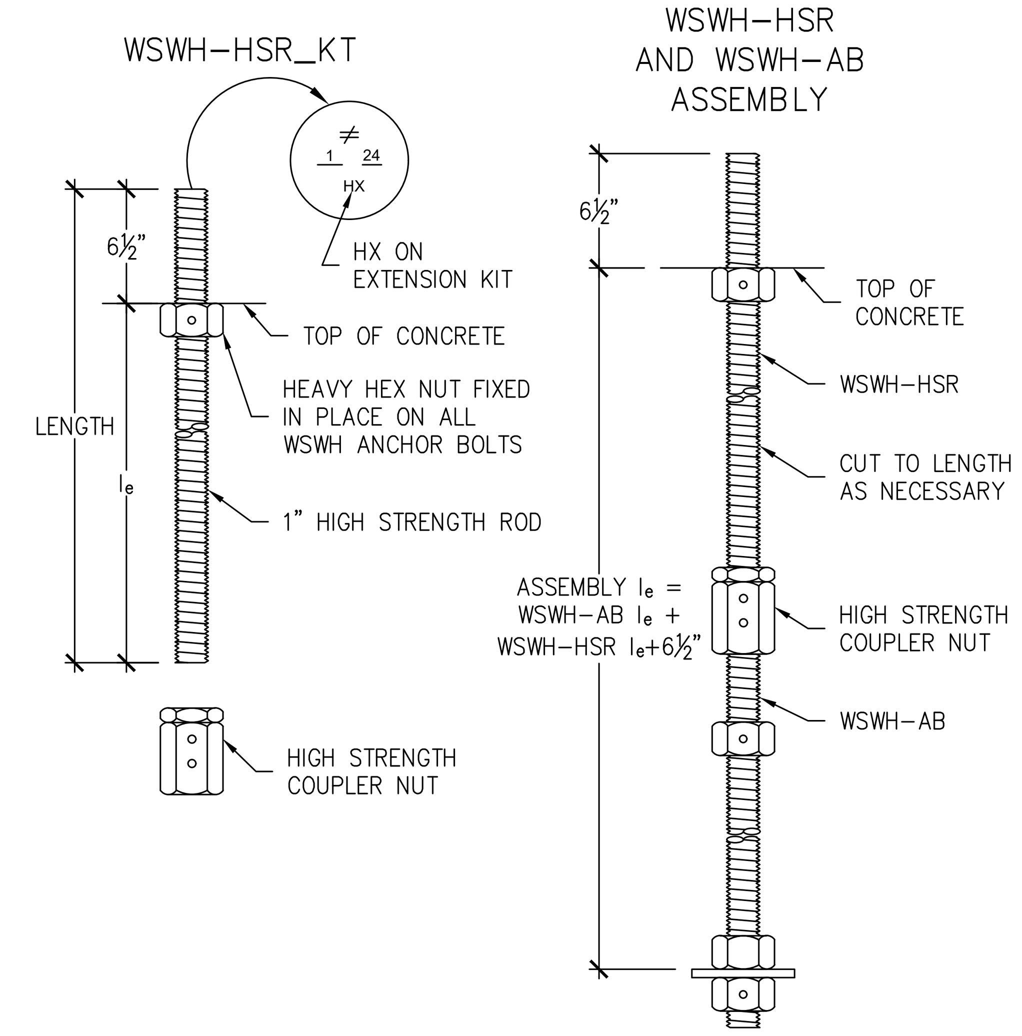

WSWH PANEL MODEL	MODEL NO.	DIAMETER	LENGTH	l_e
WSWH12, WSWH18 AND WSWH24	WSWH–HSR1x24KT	1"	24"	17½"
	WSWH–HSR1x36KT	1"	36"	29½"

WSWH ANCHOR BOLT EXTENSION 4

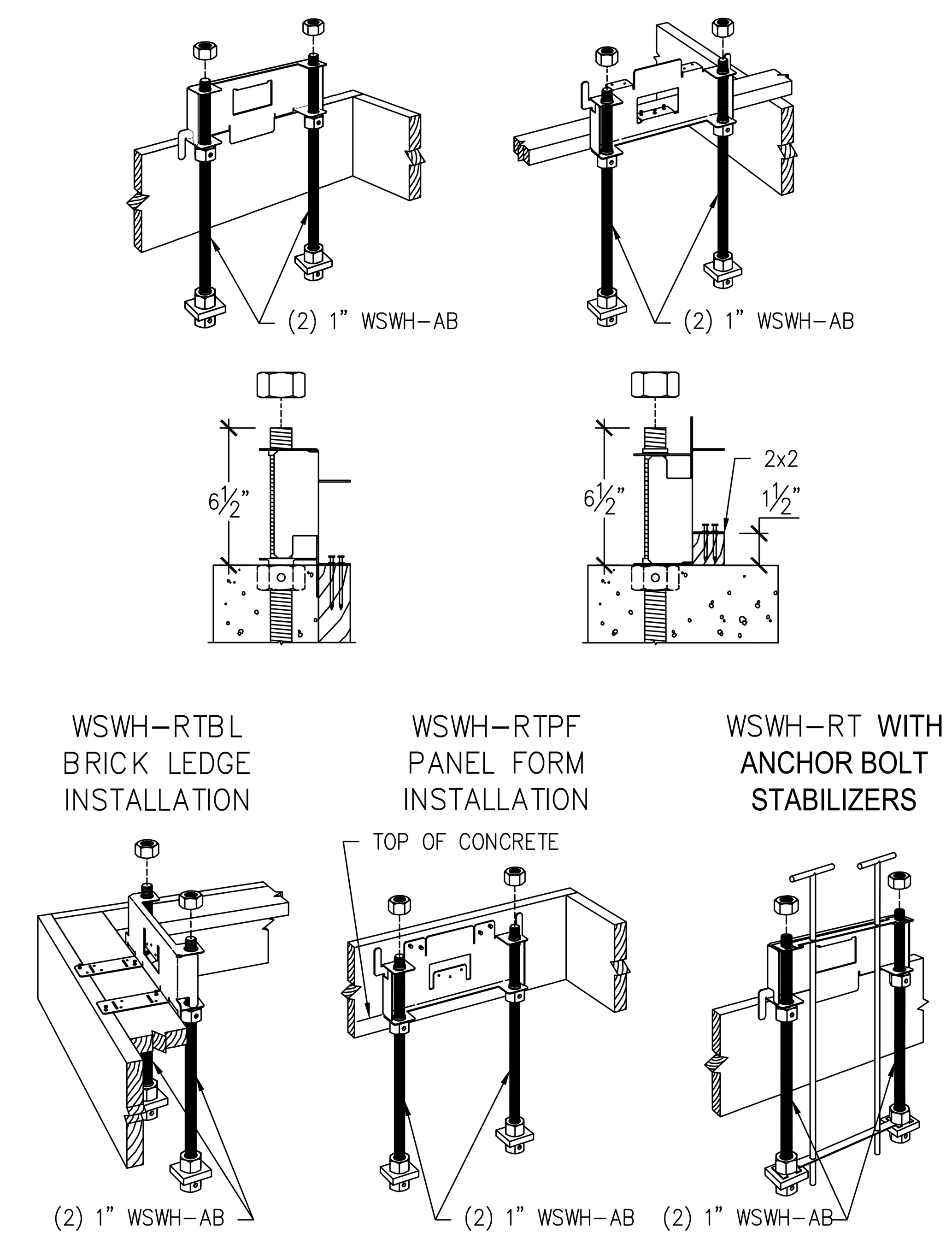

WSWH ANCHOR BOLT TEMPLATES 6

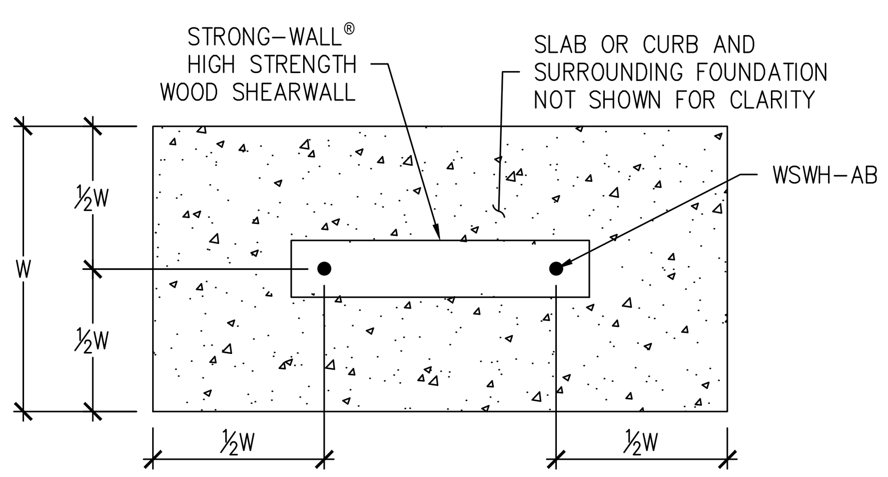

FOUNDATION PLAN VIEW

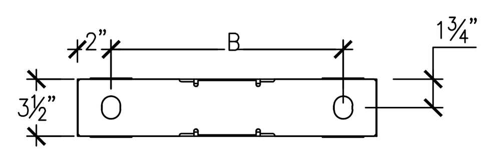

WSWH PLAN VIEW ANCHORAGE LAYOUT

ANCHOR BOLT LAYOUT	
STRONG–WALL® HIGH STRENGTH WOOD SHEARWALL MODEL NO.	DISTANCE FROM CENTER–TO–CENTER OF WSWH–AB, B (in)
WSWH12	8⅛
WSWH18	14
WSWH24	20

NOTES :
1. ANCHORAGE DESIGNS CONFORM TO ACI 318–11 APPENDIX D, ACI 318–14 CHAPTER 17 AND ACI 318–19 CHAPTER 17 WITH NO SUPPLEMENTARY REINFORCEMENT FOR CRACKED OR UNCRACKED CONCRETE AS NOTED.
2. ANCHOR STRENGTH INDICATES REQUIRED GRADE OF WSWH–AB ANCHOR BOLT. STANDARD (ASTM F1554 GRADE 36) OR HIGH STRENGTH (HS) (ASTM A193 GRADE B7).
3. SEISMIC INDICATES SEISMIC DESIGN CATEGORY C–F. DETACHED 1 AND 2 FAMILY DWELLINGS IN SDC C MAY USE WIND ANCHORAGE SOLUTIONS. SEISMIC ANCHORAGE DESIGNS CONFORM TO ACI 318–11 SECTION D.3.3.4.3, ACI 318–14 SECTION 17.2.3.4.3 AND ACI 318–19 SECTION 17.10.5.3.
4. WIND INCLUDES SEISMIC DESIGN CATEGORY A AND B AND DETACHED 1 AND 2 FAMILY DWELLINGS IN SDC C.
5. FOUNDATION DIMENSIONS ARE FOR ANCHORAGE ONLY. FOUNDATION DESIGN (SIZE AND REINFORCEMENT) BY OTHERS. THE DESIGNER MAY SPECIFY ALTERNATE EMBEDMENT, FOOTING SIZE OR ANCHOR BOLT.
6. REFER TO 1/WSWH1 FOR d_e.

WSWH ANCHORAGE SOLUTIONS FOR 2500 PSI CONCRETE

DESIGN CRITERIA	CONCRETE CONDITION	ANCHOR STRENGTH	WSWH–AB1 ANCHOR BOLT ASD ALLOWABLE UPLIFT (lbs)	W (in)	d_e (in)
SEISMIC	CRACKED	STANDARD	16,000	33	11
			17,100	35	12
		HIGH STRENGTH	34,100	52	18
			36,800	55	19
	UNCRACKED	STANDARD	15,700	28	10
			17,100	30	10
		HIGH STRENGTH	33,500	45	15
			36,800	48	16
WIND	CRACKED	STANDARD	6,200	16	6
			11,400	24	8
			17,100	32	11
		HIGH STRENGTH	21,100	36	12
			27,300	42	14
			34,100	48	16
			36,800	51	17
	UNCRACKED	STANDARD	6,400	14	6
			12,500	22	8
			17,100	28	10
		HIGH STRENGTH	22,900	33	11
			26,400	36	12
			34,200	42	14
			36,800	44	15

WSWH ANCHORAGE SOLUTIONS FOR 3000 PSI CONCRETE

DESIGN CRITERIA	CONCRETE CONDITION	ANCHOR STRENGTH	WSWH–AB1 ANCHOR BOLT ASD ALLOWABLE UPLIFT (lbs)	W (in)	d_e (in)
SEISMIC	CRACKED	STANDARD	16,000	31	11
			17,100	33	11
		HIGH STRENGTH	33,900	49	17
			36,800	52	18
	UNCRACKED	STANDARD	16,300	27	9
			17,100	28	10
		HIGH STRENGTH	34,000	43	15
			36,800	46	16
WIND	CRACKED	STANDARD	5,600	14	6
			10,200	21	7
			17,100	30	10
		HIGH STRENGTH	20,000	33	11
			26,500	39	13
			33,600	45	15
			36,800	48	16
	UNCRACKED	STANDARD	6,200	13	6
			12,800	21	7
			17,100	26	9
		HIGH STRENGTH	21,800	30	10
			28,900	36	12
			33,100	39	13
			36,800	42	14

WSWH ANCHORAGE SOLUTIONS FOR 4500 PSI CONCRETE

DESIGN CRITERIA	CONCRETE CONDITION	ANCHOR STRENGTH	WSWH–AB1 ANCHOR BOLT ASD ALLOWABLE UPLIFT (lbs)	W (in)	d_e (in)
SEISMIC	CRACKED	STANDARD	16,000	27	9
			17,100	29	10
		HIGH STRENGTH	34,700	44	15
			36,800	46	16
	UNCRACKED	STANDARD	15,700	23	8
			17,100	25	9
		HIGH STRENGTH	33,900	38	13
			36,800	40	14
WIND	CRACKED	STANDARD	6,800	14	6
			11,600	20	7
			17,100	26	9
		HIGH STRENGTH	21,400	30	10
			28,400	36	12
			32,400	39	13
			36,800	43	15
	UNCRACKED	STANDARD	6,800	12	6
			12,400	18	6
			17,100	23	8
		HIGH STRENGTH	22,800	27	9
			26,700	30	10
			30,700	33	11
			36,800	37	13

STRONG–WALL® HIGH STRENGTH WOOD SHEARWALL TENSION ANCHORAGE SCHEDULE 2,500, 3,000 AND 4,500 PSI 2

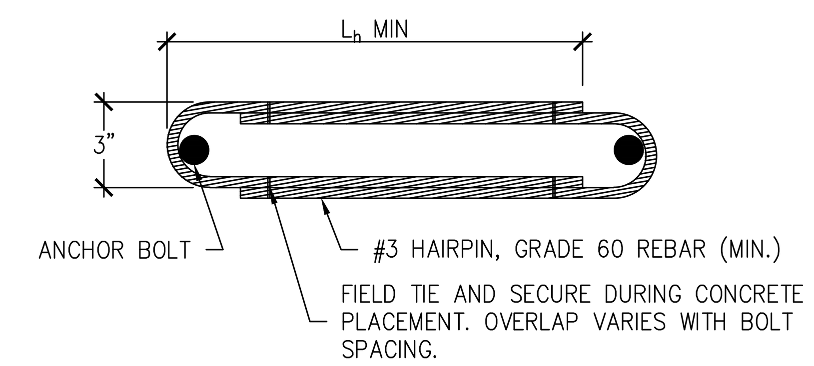

HAIRPIN SHEAR REINFORCEMENT

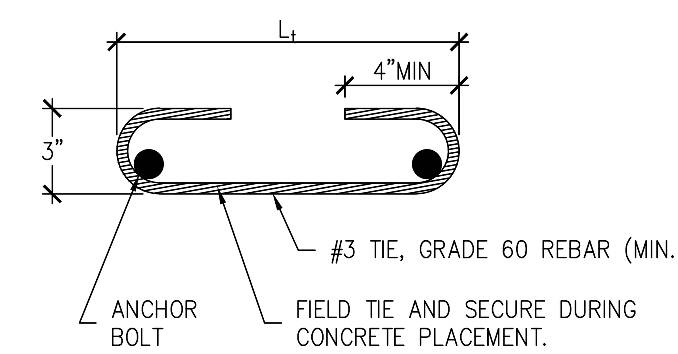

TIE SHEAR REINFORCEMENT

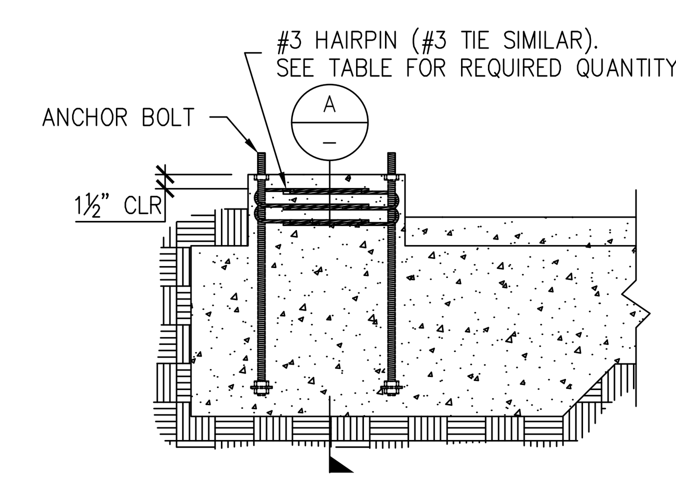

HAIRPIN INSTALLATION

(GARAGE CURB SHOWN. OTHER FOOTING TYPES SIMILAR.)

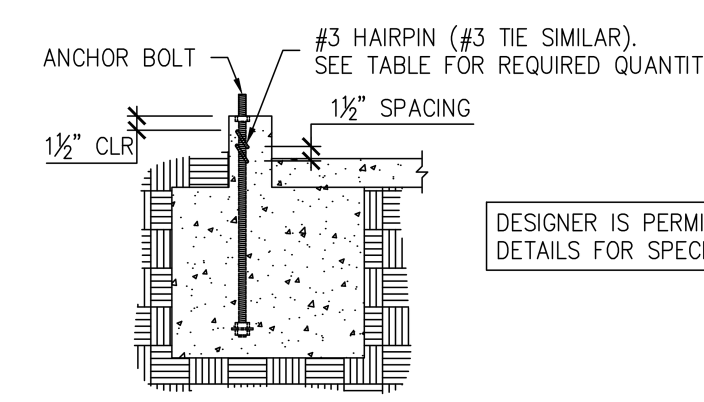

SECTION A

DESIGNER IS PERMITTED TO MODIFY DETAILS FOR SPECIFIC CONDITIONS.

STRONG–WALL® HIGH STRENGTH WOOD SHEARWALL SHEAR ANCHORAGE

MODEL	SEISMIC[3] L_t OR L_h (in.)	SEISMIC[3] SHEAR REINFORCEMENT	SEISMIC[3] MIN. CURB/ STEMWALL WIDTH (in.)	WIND[4] SHEAR REINFORCEMENT	WIND[4] MIN. CURB/ STEMWALL WIDTH (in.)	WIND[4] ASD ALLOWABLE SHEAR LOAD, V (lb.) UNCRACKED	WIND[4] ASD ALLOWABLE SHEAR LOAD, V (lb.) CRACKED
WSWH12	10¼	(1) #3 TIE	6	SEE NOTE 7	6	1,080	770
WSWH18	15	(2) #3 HAIRPINS[5,6]	6	(1) #3 HAIRPIN	6	HAIRPIN REINF. ACHIEVES MAX. ALLOW SHEAR LOAD OF THE WSWH	
WSWH24	19	(2) #3 HAIRPINS[5]	6	(2) #3 HAIRPINS[5]	6		

NOTES :
1. SHEAR ANCHORAGE DESIGNS CONFORM TO ACI 318–19, ACI 318–11 AND ACI 318–14 AND ASSUME MINIMUM 2,500 PSI CONCRETE.
2. SHEAR REINFORCEMENT IS NOT REQUIRED FOR INTERIOR FOUNDATION APPLICATIONS (PANEL INSTALLED AWAY FROM EDGE OF CONCRETE), OR BRACED WALL PANEL APPLICATIONS.
3. SEISMIC INDICATES SEISMIC DESIGN CATEGORY C THROUGH F. DETACHED 1 AND 2 FAMILY DWELLINGS IN SDC C MAY USE WIND ANCHORAGE SOLUTIONS. SEISMIC SHEAR REINFORCEMENT DESIGNS CONFORM TO ACI 318–19, SECTION 17.10.6.3, ACI 318–14, SECTION 17.2.3.5.3
4. WIND INCLUDES SEISMIC DESIGN CATEGORY A AND B.
5. ADDITIONAL TIES MAY BE REQUIRED AT GARAGE CURB OR STEMWALL INSTALLATIONS BELOW ANCHOR REINFORCEMENT PER DESIGNER.
6. USE (1) #3 HAIRPIN FOR WSWH18 WHEN STANDARD STRENGTH ANCHOR IS USED.
7. USE (1) #3 TIE FOR WSWH12 WHEN PANEL DESIGN SHEAR FORCE EXCEEDS TABULATED ANCHORAGE ALLOWABLE SHEAR LOAD.
8. #4 GRADE 40 SHEAR REINFORCEMENT MAY BE SUBSTITUTED FOR WSWH SHEAR ANCHORAGE SOLUTIONS.
9. CONCRETE EDGE DISTANCE FOR ANCHORS MUST COMPLY WITH ACI 318–19 SECTION 17.9.2, ACI 318–14 SECTION 17.7.2 AND ACI 318–11 SECTION D.8.2.
10. THE DESIGNER MAY SPECIFY ALTERNATE SHEAR ANCHORAGE.

STRONG–WALL® WSWH SHEAR ANCHORAGE SCHEDULE AND DETAILS 5

NO.	DATE	REVISIONS
0	02-26-2021	FIRST RELEASE - 2018 IBC
1	03-16-2021	2021 IBC REVISIONS
2	04-29-2022	ADDED WSWH-AB MODELS

SIMPSON Strong-Tie, Co. Inc.
• 5956 W. Las Positas Blvd.
Pleasanton, CA 94588
• Tel: (800) 999–5099
• Website: www.strongtie.com

SIMPSON Strong-Tie THERE IS NO EQUAL

STRONG-WALL® WSWH
ANCHORAGE DETAILS
ENGINEERED DESIGNS

SIMPSON Strong-Tie THERE IS NO EQUAL

NAME
DATE 04-29-2022
SCALE N.T.S.
CHECKED
SHEET WSWH1
OF SHEETS
JOB NO.

STRONG-WALL® HIGH STRENGTH WOOD SHEARWALL MODELS

MODEL NO.	W (in.)	H (in.)	ANCHOR BOLTS		TOTAL WALL WEIGHT (lb.)
			QUANTITY	DIA. (in.)	
WSWH12x7	12	84	2	1	105
WSWH18x7	18	84	2	1	155
WSWH12x8	12	96	2	1	120
WSWH18x8	18	96	2	1	175
WSWH24x8	24	96	2	1	225
WSWH12x9	12	108	2	1	130
WSWH18x9	18	108	2	1	195
WSWH24x9	24	108	2	1	250
WSWH12x10	12	120	2	1	145
WSWH18x10	18	120	2	1	210
WSWH24x10	24	120	2	1	275
WSWH12x12	12	144	2	1	165
WSWH18x12	18	144	2	1	245
WSWH24x12	24	144	2	1	325
WSWH18x14	18	168	2	1	285
WSWH24x14	24	168	2	1	370
WSWH24x16	24	192	2	1	420
WSWH18x20	18	240	2	1	390
WSWH24x20	24	240	2	1	520

NOTES :
1. FOR HEIGHTS NOT LISTED, ORDER THE NEXT TALLEST PANEL AND TRIM TO FIT. MINIMUM TRIMMED HEIGHT FOR ALL PANELS IS 74½".
2. ALL PANELS COME WITH PRE-ATTACHED HOLDOWNS, TWO HEAVY HEX NUTS, TWO HEAVY BEARING PLATES, ONE WSWH-TP TOP CONNECTION PLATE WITH REQUIRED FASTENERS AND INSTALLATION INSTRUCTIONS.
3. ALL PANELS ARE 3½" THICK.

STRONG-WALL® WSWH MODELS | 1

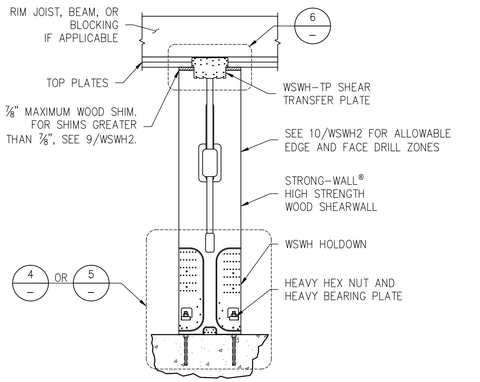

DESIGNER IS PERMITTED TO MODIFY DETAILS FOR SPECIFIC CONDITIONS.

ENSURE CONCRETE IS LEVEL AND SMOOTH BENEATH PANEL. GRIND OR FILL AS NECESSARY.

SINGLE STORY WSWH ON CONCRETE | 2

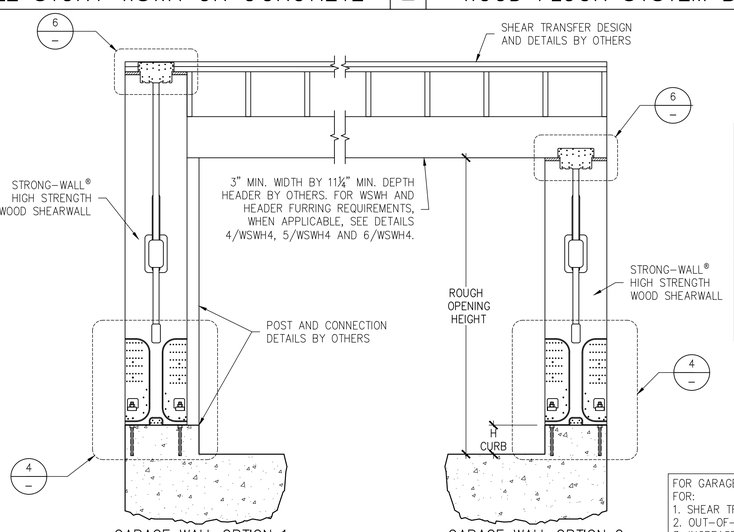

DESIGNER IS PERMITTED TO MODIFY DETAILS FOR SPECIFIC CONDITIONS.

WHEN WSWH-PS STRAPS OMITTED, ALLOWABLE SHEAR VALUES FOR STANDARD PANEL APPLY.

GARAGE HEADER ROUGH OPENING HEIGHT

MODEL NO.	TRIMMED PANEL HEIGHT	H CURB	ROUGH OPENING HEIGHT
WSWH12x7 WSWH18x7 WSWH24x7	78"	5½"	6'-11½"
		6"	7'-0"
WSWH12x8 WSWH18x8 WSWH24x8	85½"	0"	7'-1½"
	93¾"	5½"	8'-2¾"
		6"	8'-3¾"

NOTES :
1. IF REQUIRED ROUGH OPENING HEIGHT EXCEEDS TABLE VALUE, SPECIFY NEXT TALLER PANEL AND TRIM AS NECESSARY. THE STRONG-WALL® HIGH STRENGTH WOOD SHEARWALL MAY BE TRIMMED TO A MINIMUM HEIGHT OF 74½".
2. FURRING DOWN GARAGE HEADER MAY BE REQUIRED FOR CORRECT ROUGH OPENING HEIGHT.

FOR GARAGE WALL OPTION 2, DESIGNER SHALL DESIGN AND DETAIL FOR:
1. SHEAR TRANSFER
2. OUT-OF-PLANE LOADING EFFECT
3. INCREASED OVERTURNING AND DRIFT DUE TO ADDITIONAL HEIGHT

ALTERNATE WSWH GARAGE FRONT OPTIONS | 3

STANDARD INSTALLATION BASE CONNECTION | 4

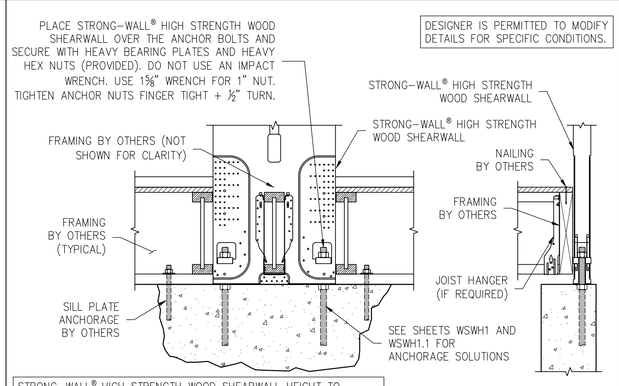

DESIGNER IS PERMITTED TO MODIFY DETAILS FOR SPECIFIC CONDITIONS.

STRONG-WALL® HIGH STRENGTH WOOD SHEARWALL HEIGHT TO INCLUDE THE DEPTH OF THE FLOOR SYSTEM AND SHALL BE INSTALLED DIRECTLY ON THE FOUNDATION. SPECIFY PANEL HEIGHT FROM TOP OF FOUNDATION TO UNDERSIDE OF TOP PLATES OR BEAM.

WOOD FLOOR SYSTEM BASE CONNECTION | 5

DESIGNER IS PERMITTED TO MODIFY DETAILS FOR SPECIFIC CONDITIONS.

WSWH-TP CONNECTION		
MODEL NO.	FASTENER QUANTITY	
	SWS16150	SDS25600
WSWH-TP12	14	2
WSWH-TP18	26	4
WSWH-TP24	46	8

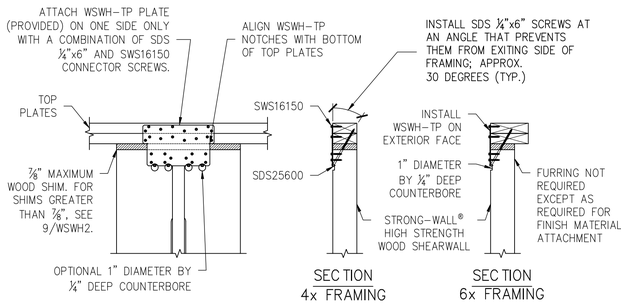

TOP CONNECTION | 6

DESIGNER IS PERMITTED TO MODIFY DETAILS FOR SPECIFIC CONDITIONS.

WSWH-TP CONNECTION		
MODEL NO.	FASTENER QUANTITY	
	SWS16150	SDS25600
WSWH-TP12	28	4
WSWH-TP18	52	8
WSWH-TP24	92	16

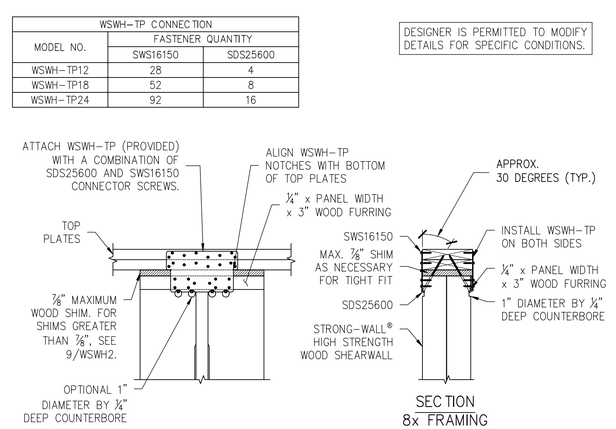

BACK-TO-BACK TOP CONNECTION | 7

QTY. OF SDS¼"x6" SCREWS REQ'D.	
WSWH12	4
WSWH18	8
WSWH24	16

DESIGNER IS PERMITTED TO MODIFY DETAILS FOR SPECIFIC CONDITIONS.

EDGE DISTANCE FOR SCREWS		
SLOPE	A (in.)	B (in.)
0:12-4:12	2	3
5:12-8:12	1½	4½
9:12-12:12	1½	5½

INSTALL SDS ¼"x6" SCREWS (ORDER SEPARATELY). INSTALL IN 2 ROWS AS SHOWN AND COUNTERSINK AS REQUIRED.

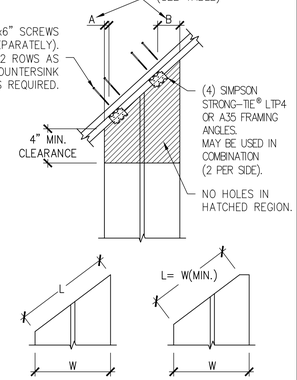

NOTES :
1. MAINTAIN END DISTANCES TO PREVENT SCREWS FROM PENETRATING THROUGH THE OUTER EDGES.
2. INSTALL SCREWS PERPENDICULAR TO THE TOP PLATE.
3. EDGE DISTANCES ASSUME DOUBLE TOP PLATE.

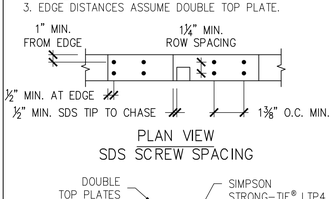

INSTALLATION NOTES :
1. ACTUAL CUT LENGTH (L) MUST BE GREATER THAN OR EQUAL TO PANEL WIDTH (W).
2. THIS DETAIL APPLICABLE FOR SLOPES UP TO 12:12.
3. PANELS TALLER THAN 12' MUST BE DESIGNED FOR THE APPLICATION.

RAKE WALL | 8

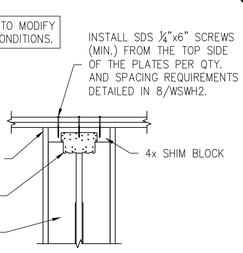

DESIGNER IS PERMITTED TO MODIFY DETAILS FOR SPECIFIC CONDITIONS.

DESIGNER SHALL DESIGN AND DETAIL FOR:
1. SHEAR TRANSFER
2. OUT-OF-PLANE LOADING EFFECT
3. INCREASED OVERTURNING AND DRIFT DUE TO ADDITIONAL HEIGHT

FOR 8" TO 12" BLOCK DEPTHS:
ATTACH SIMPSON STRONG-TIE® CS16 STRAPS AT EDGE OF WSWH PANEL (EACH SIDE) USING 10dx1½" NAILS
SHIM BLOCK HEIGHTS GREATER THAN 8" AND UP TO 10":
- 8 NAILS INTO BLOCK
- 8 NAILS INTO WSWH PANEL

SHIM BLOCK HEIGHTS GREATER THAN 10" AND UP TO 12":
- 10 NAILS INTO BLOCK
- 10 NAILS INTO WSWH PANEL

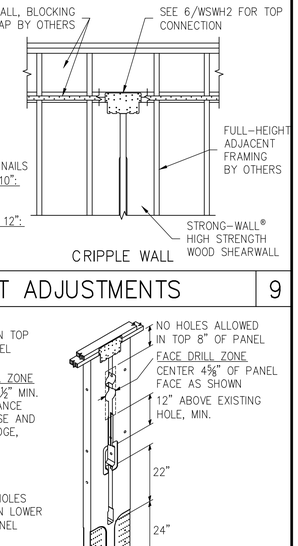

TOP OF WALL HEIGHT ADJUSTMENTS | 9

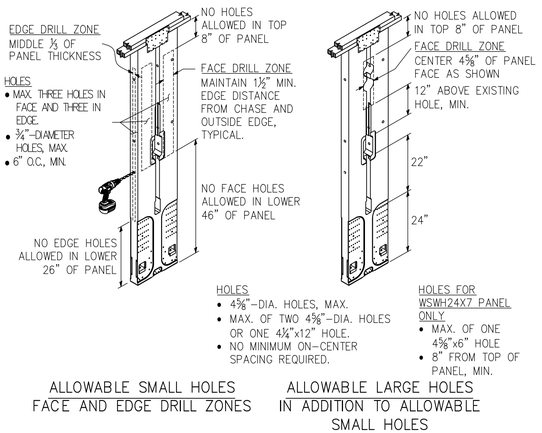

TRIM ZONE AND ALLOWABLE HOLES | 10

1. STRONG-WALL® HIGH STRENGTH WOOD SHEARWALL IS MANUFACTURED AND TRADEMARKED BY "SIMPSON STRONG-TIE COMPANY INC." HOME OFFICE: 5956 W. LAS POSITAS BLVD., PLEASANTON, CA 94588 TEL: (800) 999-5099, FAX: (925) 847-1597. "SIMPSON STRONG-TIE COMPANY INC." IS AN ISO 9001-2008 REGISTERED COMPANY.
2. USE OF THIS PRODUCT IS SUBJECT TO THE APPROVAL OF THE LOCAL BUILDING DEPARTMENT.
3. THIS PRODUCT IS PART OF THE OVERALL LATERAL FORCE RESISTING SYSTEM OF THE STRUCTURE. DESIGN OF THE BUILDING'S LATERAL FORCE RESISTING SYSTEM, INCLUDING THE LOAD PATH TO TRANSFER LATERAL FORCES FROM THE STRUCTURE TO THE GROUND, IS THE RESPONSIBILITY OF THE DESIGNER.
4. ENGINEER OF RECORD IS PERMITTED TO MODIFY DETAILS FOR SPECIFIC CONDITIONS.
5. THE CONTRACTOR SHALL VERIFY ALL DIMENSIONS, CONDITIONS, ELEVATIONS, ETC. PRIOR TO INSTALLATION OF ANY COMPONENTS FOR THE STRONG-WALL SB SYSTEM. IF ANY DISCREPANCIES ARE FOUND, THEY SHALL BE BROUGHT TO THE ATTENTION OF THE DESIGNER FOR CLARIFICATION PRIOR TO CONSTRUCTION.
6. INSTALLATION OF PRODUCT SHALL BE DONE IN CONFORMANCE TO THESE DRAWINGS. THE PERFORMANCE OF MODIFIED PRODUCTS OR ALTERED INSTALLATION PROCEDURES ARE THE SOLE RESPONSIBILITY OF THE DESIGNER.
7. SIMPSON STRONG-TIE COMPANY INC. RESERVES THE RIGHT TO CHANGE SPECIFICATIONS, DESIGNS, AND MODELS WITHOUT NOTICE OR LIABILITY FOR SUCH CHANGES.
8. ALL HARDWARE CALLED OUT IS SIMPSON STRONG-TIE.
9. SEE ICC-ES ESR-2652 OR CITY OF LOS ANGELES RR25730 AS APPLICABLE FOR ADDITIONAL INFORMATION.

NOTES | 11

NO.	DATE	REVISIONS
0	11-20-2020	FIRST RELEASE - 2018 IBC
1	03-16-2021	2021 IBC REVISIONS

SIMPSON Strong-Tie, Co. Inc.
• 5956 W. Las Positas Blvd.
• Pleasanton, CA 94588
• Tel: (800) 999-5099
• Website: www.strongtie.com

SIMPSON Strong-Tie® THERE IS NO EQUAL

STRONG-WALL® WSWH
FRAMING DETAILS
ENGINEERED DESIGNS

NAME	
DATE	03-16-2021
SCALE	N.T.S.
CHECKED	
SHEET	WSWH2
OF	SHEETS
JOB NO.	

TABLE 1:
STRONG-WALL® WSWH SECOND-STORY WALLS STACKED APPLICATION

MODEL NO.	W (in.)	H (in.)	TOTAL WALL WEIGHT (lb.)
WSWH12x7	12	84	105
WSWH18x7	18	84	155
WSWH12x8	12	96	120
WSWH18x8	18	96	175
WSWH24x8	24	96	225
WSWH12x9	12	108	130
WSWH18x9	18	108	195
WSWH24x9	24	108	250
WSWH12x10	12	120	145
WSWH18x10	18	120	210
WSWH24x10	24	120	275
WSWH12x12	12	144	165
WSWH18x12	18	144	245
WSWH24x12	24	144	325
WSWH18x14	18	168	285
WSWH24x14	24	168	370

NOTES:
1. ALL PANELS COME WITH PRE-ATTACHED HOLDOWNS, TWO HEAVY HEX NUTS, TWO HEAVY BEARING PLATES, ONE WSWH-TP TOP CONNECTION PLATE WITH REQUIRED FASTENERS AND INSTALLATION INSTRUCTIONS.
2. ORDER TWO-STORY STACKED WALL CONNECTOR KIT SEPARATELY FOR TWO-STORY STACKED APPLICATIONS. KIT INCLUDES TWO MULTI-STORY KIT HOLDOWNS, TWO THREADED RODS, SHEAR TRANSFER PLATE, TWO HEAVY HEX NUTS, AND INSTALLATION INSTRUCTIONS.
3. ALL PANELS ARE 3½" THICK.

TABLE 2:
STRONG-WALL® WSWH FIRST-STORY WALLS STACKED APPLICATION

MODEL NO.	W (in.)	H (in.)	ANCHOR BOLTS		TOTAL WALL WEIGHT (lb.)
			QUANTITY	DIA. (in.)	
WSWH12x8	12	96	2	1	120
WSWH18x8	18	96	2	1	175
WSWH24x8	24	96	2	1	225
WSWH12x9	12	108	2	1	130
WSWH18x9	18	108	2	1	195
WSWH24x9	24	108	2	1	250
WSWH12x10	12	120	2	1	145
WSWH18x10	18	120	2	1	210
WSWH24x10	24	120	2	1	275
WSWH12x12	12	144	2	1	165
WSWH18x12	18	144	2	1	245
WSWH24x12	24	144	2	1	325
WSWH18x14	18	168	2	1	285
WSWH24x14	24	168	2	1	370

TABLE 3:
TWO-STORY STACKED WALL CONNECTION KIT

WALL WIDTH (in.)	MODEL NO.	CONTENTS
12	WSWH-TSS12KT	EACH KIT CONTAINS: (1) SHEAR TRANSFER PLATE (2) MULTI-STORY KIT HOLDOWNS (2) 1" x 30" THREADED RODS (ASTM A193 B7) (2) HEAVY HEX NUTS INSTALLATION INSTRUCTIONS
18	WSWH-TSS18KT	
24	WSWH-TSS24KT	

TWO-STORY STACKED WSWH MODELS | 1

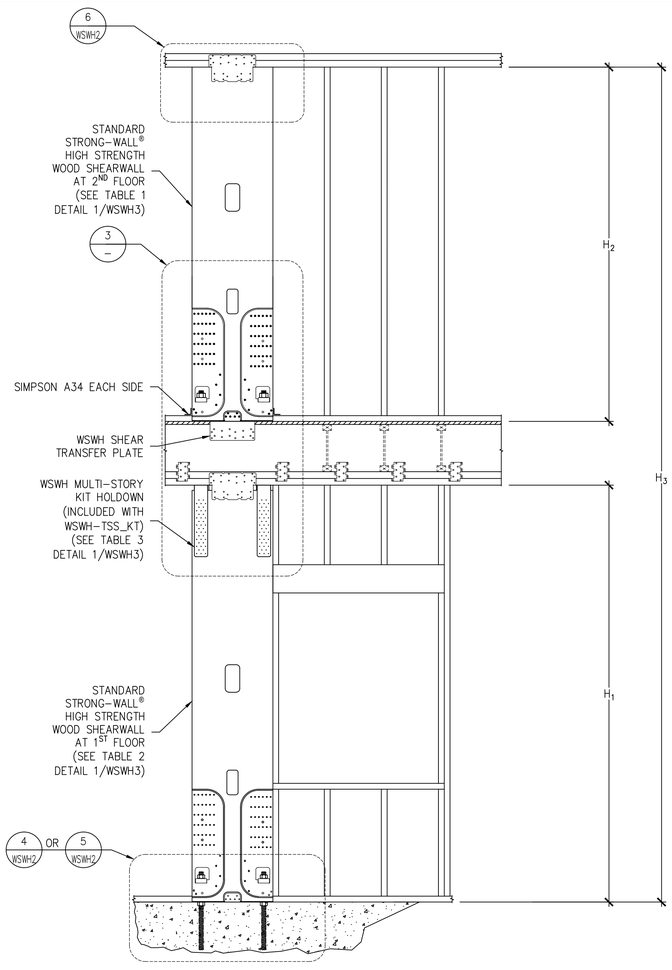

NOTE:
1. 1ST STORY WSWH MUST BE THE SAME WIDTH AS THE 2ND STORY WSWH.

DESIGNER IS PERMITTED TO MODIFY DETAILS FOR SPECIFIC CONDITIONS.

LEGEND :
- H_1 = 1ST STORY WSWH HEIGHT; TOP OF CONCRETE TO UNDERSIDE OF 1ST STORY TOP PLATES (IN.)
- H_2 = 2ND STORY WSWH HEIGHT; TOP OF FLOOR SHEATHING TO UNDERSIDE OF 2ND STORY TOP PLATES (IN.)
- H_3 = TOTAL ASSEMBLY HEIGHT; TOP OF CONCRETE TO UNDERSIDE OF 2ND STORY TOP PLATES (IN.)

TWO-STORY STACKED | 2

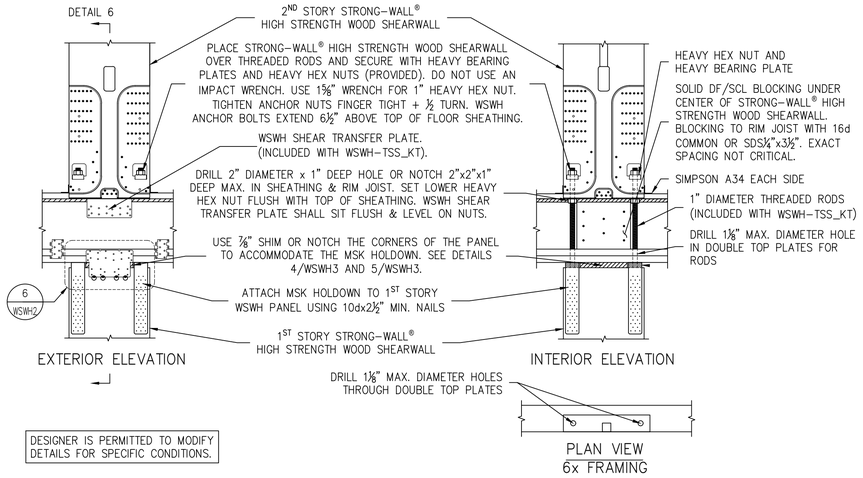

DESIGNER IS PERMITTED TO MODIFY DETAILS FOR SPECIFIC CONDITIONS.

TWO-STORY STACKED FLOOR FRAMING | 3

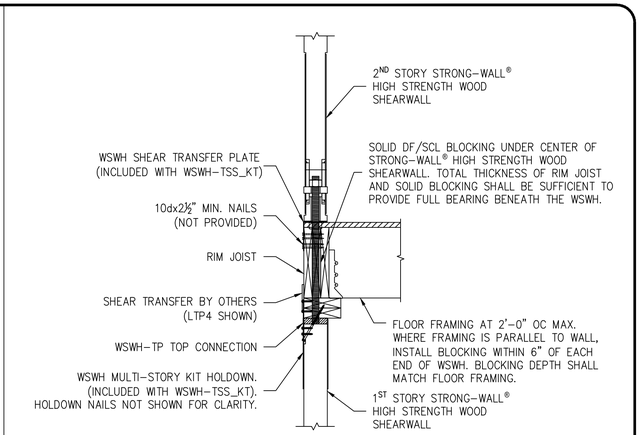

DESIGNER IS PERMITTED TO MODIFY DETAILS FOR SPECIFIC CONDITIONS.

TWO-STORY STACKED FLOOR SECTION | 6

DESIGNER IS PERMITTED TO MODIFY DETAILS FOR SPECIFIC CONDITIONS.

WALL WIDTH	SHIM SIZE
12"	⅞"x3½"x4½"
18"	⅞"x3½"x10½"
24"	⅞"x3½"x16½"

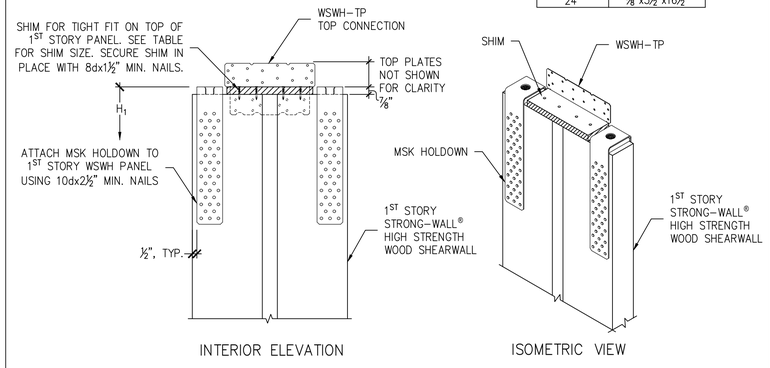

TOP OF 1ST STORY PANEL CONNECTION | 4

DESIGNER IS PERMITTED TO MODIFY DETAILS FOR SPECIFIC CONDITIONS.

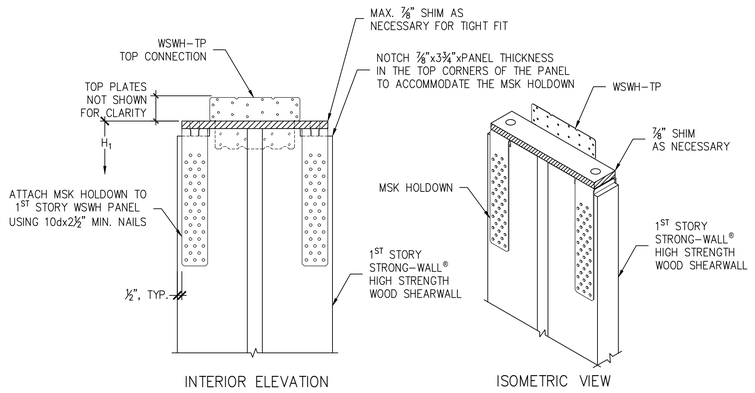

ALTERNATIVE TOP OF 1ST STORY PANEL CONNECTION | 5

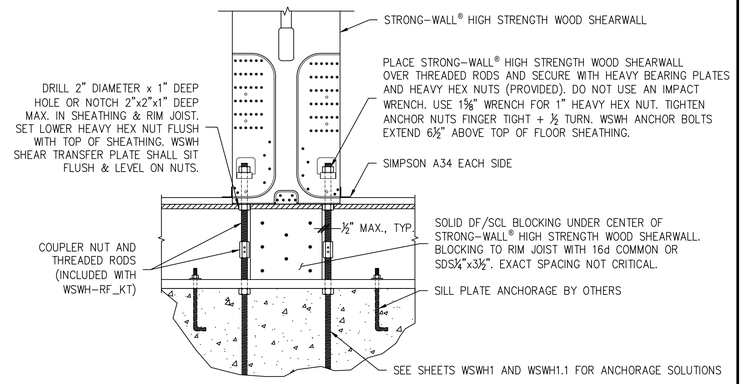

DESIGNER IS PERMITTED TO MODIFY DETAILS FOR SPECIFIC CONDITIONS.

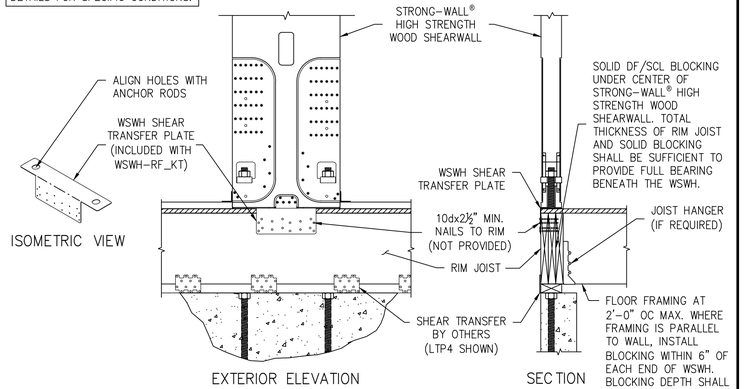

WOOD FIRST-FLOOR WALL CONNECTION KIT

WALL WIDTH (in.)	MODEL NO.	CONTENTS
12	WSWH-RF12KT	EACH KIT CONTAINS: (1) SHEAR TRANSFER PLATE (2) 1" x 18" THREADED RODS (ASTM A193 B7) (2) COUPLER NUTS (2) HEAVY HEX NUTS INSTALLATION INSTRUCTIONS
18	WSWH-RF18KT	
24	WSWH-RF24KT	

ORDER FIRST FLOOR CONNECTION KIT SEPARATELY.
MODEL WSWH-RF_KT. EXAMPLE WSWH-RF18KT

FIRST FLOOR AT WOOD FRAMING NOTES :
1. USE WOOD FIRST-FLOOR ALLOWABLE LOAD TABLES FROM THE STRONG-WALL CATALOG FOR THIS INSTALLATION.
2. USE ALTERNATE DETAIL 5/WSWH2 TO ACHIEVE MAXIMUM ON-CONCRETE ALLOWABLE LOADS.
3. FOR TWO-STORY STACKED STRONG-WALL HIGH STRENGTH WOOD SHEARWALLS WITH WOOD FIRST FLOOR, USE ALTERNATE DETAIL 5/WSWH2.
4. DESIGNER SHALL DESIGN FOR SHEAR TRANSFER FROM RIM JOIST TO SILL PLATE AND SILL PLATE TO FOUNDATION.

FIRST FLOOR AT WOOD FRAMING | 7

NO.	DATE	REVISIONS
1	06-14-2021	FIRST RELEASE - 2021 IBC

SIMPSON Strong-Tie, Co. Inc.
• 5956 W. Las Positas Blvd.
• Pleasanton, CA 94588
• Tel: (800) 999-5099
• Website: www.strongtie.com

SIMPSON Strong-Tie THERE IS NO EQUAL

STRONG-WALL® WSWH
FRAMING DETAILS
FIRST FLOOR WALL AND TWO-STORY STACKED
ENGINEERED DESIGNS

SIMPSON Strong-Tie THERE IS NO EQUAL

NAME	
DATE	06-14-2021
SCALE	N.T.S.
CHECKED	
SHEET	WSWH3
OF	SHEETS
JOB NO.	

PART 1: GENERAL

A. PROVIDE ALL WORK AND MATERIALS FOR THE INSTALLATION OF COMPLETE WIRING SYSTEMS AS SPECIFIED HEREIN AND INDICATED ON THE DRAWINGS.

B. ALL ELECTRICAL PERMITS AND INSPECTION FEES SHALL BE OBTAINED AND PAID FOR BY THE ELECTRICAL CONTRACTOR.

C. ELECTRICAL CONTRACTOR SHALL GUARANTEE ALL WORK AND MATERIALS FOR ONE YEAR EFFECTIVE THE DAY THE PROJECT IS ACCEPTED BY THE OWNER.

D. WORK SHALL BE IN ACCORDANCE WITH THE NATIONAL ELECTRICAL CODE, OSHA, STATE BUILDING CODE AND ALL OTHER APPLICABLE LOCAL REQUIREMENTS. ALL WORK SHALL COMPLY WITH THE LATEST ADDITION OF NECA STANDARDS OF INSTALLATION.

E. ALL MATERIALS, DEVICES, AND APPLIANCES SHALL BE NEW, EXCEPT WHERE OTHERWISE AND SHALL BE LISTED BY AN APPROVED TESTING AGENCY WHERE SUCH A LISTING IS AVAILABLE. FACTORY ASSEMBLED EQUIPMENT SHALL BE LISTED AND LABELED AS AN ASSEMBLY. ANY EQUIPMENT NOT LISTED SHALL HAVE PRIOR APPROVAL FROM THE LOCAL AUTHORITY HAVING JURISOICTION. ALL MATERIALS SHALL COMPLY WITH APPLICABLE ANSI, IEEE AND NEMA STANDARDS.

F. PROVIDE ALL CUTTING. PATCHING, CHANNELING AND CHASING FOR INSTALLATION OF WORK AND REPAIR ANY DAMAGE OF EXISTING OR NEW INSTALLATIONS AT THE CONTRACTORS EXPENSE.

G. SHOP DRAWINGS AND CATALOG DATA SHALL BE SUBMITTED FOR APPROVAL PRIOR TO BEGINNING WORK. SUBMIT FOUR COPIES OF SHOP DRAWINGS FOR LIGHTING FIXTURES, LAMPS, BALLASTS AND PANELBOARDS. SUBMIT FOUR COPIED OF CATALOG DATA FOR DISCONNECT SWITCHES AND WIRING DEVICES.

H. PROVIDE ENGRAVED PHENOLIC NAMEPLATES FOR PANELBOARDS, WIRING TROUGHS, AND FUSED SWITCHES, WHITE LETTERS ON BLACK FOR 120/208 VOLT SYSTEMS. LABEL ALL BREAKERS INSIDE THE PANEL NEXT TO THE BREAKER USING THE NUMBER SCHEME INDICATED ON THE DRAWINGS:

I. AN ELECTRICAL INSPECTION CERTIFICATE SHALL BE ISSUED BY THE LOCAL INSPECTION AUTHORITIES BEFORE APPROVAL FOR FINAL PAYMENT.

J. THE CONDUIT AND NEUTRAL SYSTEM SHALL BE GROUNDED AT THE MAIN SERVICE EQUIPMENT. GROUNDING ELECTRODE SYSTEM SHALL BE INSTALLED PER N_E.C. ARTICLE 250 AND AS INDICATED ON THE DRAWINGS.

K. WIRING SHALL BE TESTED FOR CONTINUITY AND GROUNDS BEFORE BEING ENERGIZED. FAULTY WIRING SHALL BE REPLACED AT NO ADDITIONAL EXPENSE TO THE OWNER,

L. IF, DURING THE COURSE OF WORK, THE ELECTRICAL CONTRACTOR DISCOVERS A PROBLEM WITH THE PERFORMANCE OF THE INSTALLATION RELATIVE TO THE PLANS AND SPECIFICATIONS OR NEC OR OTHER CODES. THE CONTRACTOR SHALL IMMEDIATELY BRING THE PROBLEM TO THE ATTENTION OF THE ARCHITECT OR ENGINEER FOR RESOLUTION PRIOR TO THE EXECUTION OF THE WORK.

M. THE ELECTRICAL CONTRACTOR SHALL CONNECT ALL EQUIPMENT REQUIRING ELECTRICAL CONNECTIONS, UNLESS OTHERWISE NOTED, EXCEPT FOR CONTROL WIRING FOR EQUIPMENT NOT PROVIDED BY THE ELECTRICAL CONTRACTOR CONTROL WIRING FOR SUCH EQUIPMENT SHALL BE PROVIDED BY THE RESPECTIVE DISCIPLINE.

N. COORDINATE LOCATION AND REQUIREMENTS FOR ELECTRICAL SERVICE WITH THE POWER COMPANY. WHERE MORE THAN ONE SERVICE |S SUPPLIED TO A BUILDING. PROVIDE IDENTIFICATION AT EACH SERVICE PER NEC 230-2(B) AND AS INDICATED ON THE DRAWINGS.

O. COORDINATE LOCATION AND REQUIREMENTS FOR TELEPHONE SERVICE WITH THE TELEPHONE COMPANY AND AS INDICATED ON THE DRAWINGS.

P. THE ELECTRICAL CONTRACTOR SHALL BE RESPONSIBLE FOR OBTAINING AND PROVIDING TEMPORARY POWER

PART 2: RACEWAY

A. CONDUIT SHALL BE ZINC-COATED EMT INDOORS. EMT FITTINGS SHALL BE STEEL SCREW. MINIMUM SIZE SHALL BE 1/2"C, UNLESS OTHERWISE NOTED. USE SCHEDULE 40 PVC OUTGOORS ABOVE 8'-0" OR BELOW GRADE. USE IMC WHERE REQUIRED BY CODE OR EXPOSED BELOW 8'-0".

B. SUPPORT ALL CONDUITS WITH STRAPS AND CLAMPS. RUN ALL CONDUIT PARALLEL OR PERPENDICULAR TO BUILDING WALLS.

C. JUNCTION AND PULL BOXES SHALL BE CODE GAUGE GALVANIZED SHEET METAL.

D. LIQUID-TIGHT FLEXIBLE METAL CONDUIT SHALL BE USED FOR EQUIPMENT CONNECTIONS, BUT NOT AS A WIRING METHOD OTHERWISE.

E. MC CABLE MAY BE USED AS A WIRING METHOD WHERE ALLOWED BY CODE.

F. RACEWAY PENETRATIONS THROUGH FLOOR SLABS AND FIRE-RATED WALLS SHALL BE FILLED WITH IMPERVIOUS, NON-SHRINK GROUT SUFFICIENTLY TIGHT TO PREVENT THE TRANSFER OF SMOKE, WATER, AND DUST. ROOF PENETRATIONS SHALL BE WITHIN THE EQUIPMENT CURB WHERE POSSIBLE.

G. CONDUIT INSTALLED UNDERGROUND OR IN CONCRETE SHALL HAVE JOINTS MADE WATER-TIGHT BY USE OF POLYTETRA-FLUOROETHYLENE TAPE. AAPPROVED SEALS SHALL BE PROVIDED IN HAZARDOUS LOCATIONS AS REQUIRED BY THE N.E.C.

PART 3: CONDUCTORS

A. ALL CONDUCTORS SHALL BE SINGLE CONDUCTOR COPPER. THHN/THWN, SOLID FOR SIZES #14 THROUGH #10. THHN/THWN STRANDED FOR SIZES #8 AND LARGER.

B. BRANCH CIRCUITS SHALL NOT BE SMALLER THAN #12 AWG. CONTROL WIRING MAY BE #14 AWG.

C. CONDUCTORS SHALL BE COLOR CODED BLACK/RED/BLUE FOR 120/208 VOLT SYSTEMS FOR A, B, AND C PHASES, RESPECTIVELY.

D. WIRING TO LIGHTING FIXTURES SHALL BE AS REQUIRED BY UL LABEL.

E. ALL BRANCH CIRCUIT CONDUITS OR CABLE ASSEMBLIES SHALL CONTAIN AN INSULATED GREEN GROUNDING CONDUCTOR SIZED PER NEC 250-122.

F. ALL CONDUCTORS INSTALLED IN VERTICAL RACEWAYS SHALL BE SUPPORTED AT INTERVALS AS REQUIRED PER NEC ARTICLE 300-19.

G. ALL EQUIPMENT AND DEVICE TERMINATIONS SHALL BE UL LISTED FOR USE WITH 75°C INSULATED CONDUCTORS AT THEIR 75°C AMPACITY.

H. PROVIDE A SEPARATE NEUTRAL FOR EACH PHASE CONDUCTOR IN ALL BRANCH CIRCUITS.

PART 4: WIRING DEVICES

A. A. WIRING DEVICES SHALL BE ALMOND WITH MATCHING PLASTIC COVER PLATES, SPECIFICATION GRADE AS INDICATED BELOW, EQUAL TO THE COOPER QUALITY INDICATED. VERIFY WITH ARCHITECT & BRAND STANDARDS PRIOR TO ORDERING.

TOGGLE SWITCHES SHALL BE AS FOLLOWS:

SINGLE POLE 20 AMP COOPER 1221
THREE WAY 20 AMP COOPER 1223
SINGLE POLE/KEY 20 AMP COOPER 1221L
THREE WAYI/KEY 20 AMP COOPER 1223L

DUPLEX RECEPTACLES SHALL HAVE A NYLON FACE AND SHALL BE AS FOLLOWS:

15 AMP DUPLEX COOPER 5252
20 AMP DUPLEX COOPER 5362
15 AMP DUPLEX-GFCI COOPER GF5262
20 AMP DUPLEX-GFCI COOPER GF5362
20 AMP DUPLEX/USB/TAMPER COOPER TR7745
15 AMP DUPLEX-IG COOPER IG5252
20 AMP DUPLEX-IG COOPER IG5362
15 AMP DUPLEX-IG/TVSS COOPER IG5252S
20 AMP DUPLEX-IG/TVSS COOPER IG5362S

B. DUPLEX RECEPTACLES ON DEDICATED CIRCUIT SHALL BE 20 AMP. OTHER DUPLEX RECEPTACLES MAY BE 15 AMP, UNLESS OTHERWISE NOTED.

C. OUTLET BOXES SHALL NOT BE MOUNTED BACK-TO-BACK.

D. A MAXIMUM OF 10 RECEPTACLES SHALL BE ON EACH BRANCH CIRCUIT.

E. WEATHERPROOF COVERS SHALL HAVE A LID SO THAT PLUGS MAY BE INSTALLED WITHOUT COMPROMISING THE WP FUNCTION, EQUAL TO INTERMATIC GUARDIAN ONE #WP1020C.

F. ALL OUTLETS (INCLUDING TELEPHONE, CABLE TV AND DATA) SHALL HAVE COVER PLATES, BLANK IF NOT USED.

PART 5: DISCONNECT SWITCHES

A. DISCONNECT SWITCHES SHALL BE HEAVY-DUTY TYPE INNEMA 1 ENCLOSURES (UNLESS OTHERWISE INDICATED), FUSED OR NON-FUSED AS INDICATED. FUSED SWITCHES SHALL HAVE REJECTION-TYPE FUSE CLIPS. SWITCHES SHALL BE SQUARE D, OR EQUAL. FUSES SHALL BE CLASS R-5, TIME DELAY. A SET OF 3 SPARE FUSES OF EACH SIZE AND TYPE SHALL BE FURNISHED TO THE OWNER.

PART 6: PANELBOARDS

A. PANELBOARDS SHALL BE DEAD-FRONT SAFETY TYPE. ALL CIRCUIT BREAKERS SHALL BE MOLDED-CASE, BOLT-ON, AUTOMATIC THERMAL MAGNETIC TYPE, CALIBRATED FOR 40°C, OR AMBIENT COMPENSATION. CABINET SHALL BE 20 INCHES WIDE MINIMUM, WITH NOT LESS THAT 4-INCH WIRING GUTTERS AT TOP, SIDES. AND BOTTOM, SQUARE D "NF", "NQOD", OR EQUAL. BUS SHALL BE ALUMINUM WITH RATINGS AS INDICATED ON DRAWINGS LUGS SHALL BE SIZED TO ACCOMMODATE CONDUCTORS INDICATED ON THE POWER RISER DIAGRAM.

B. PROVIDE HANDLE LOCK-ON DEVICES ON ALL CIRCUIT BREAKERS CONNECTED TO EMERGENCY, EXIT, AND NIGHT LIGHTING, FIRE ALARM, TELEPHONE AND SECURITY SYSTEMS.

C. CIRCUIT BREAKERS USED FOR SWITCHING OF LIGHTING OR SIGN CIRCUITS SHALL BE SWITCHING DUTY RATED AND SHALL BE MARKED “SWD’.

PART 7: LIGHT FIXTURES

A. CATALOG NUMBERS GIVEN DENOTE MINIMUM QUALITY AND PERFORMANCE REQUIRED. EQUAL EQUIPMENT BY OTHER MANUFACTURERS IS ACCEPTABLE AS INDICATED ON THE LIGHT FIXTURE SCHEDULE

B. H.LD. BALLASTS SHALL BE HIGH POWER FACTOR WITH QUIETEST SOUND RATING.

C. LAY-IN FIXTURES SHALL BE SUSPENDED FROM STRUCTURE WITH 2 WIRES AT OPPOSITE CORNERS. DO NOT SUPPORT FROM CEILING GRID.

D. SEE ARCHITECTURAL REFLECTED CEILING PLANS FOR EXACT LOCATION OF LIGHT FIXTURES.

E.. CALL RECESSED LIGHTING FIXTURES SHALL BE THERMALLY PROTECTED.

F. COMPACT FLUORESCENT BALLASTS SHALL BE ELECTRONIC WITH END OF LIFE PROTECTION.

G. LED FIXTURE SHALL HAVE 0-10V DIMMING DRIVERS AS SPECIFIED IN LIGHT FIXTURE SCHEDULE.

H. LED FIXTURES SHALL BE SPECIFICATION GRADE AND DRIVERS SHALL HAVE INRUSH PROTECTION

PART 8: TELEPHONE/DATA SYSTEM

A. FURNISH AND INSTALL A COMPLETE TELEPHONE/DATA CONDUIT SYSTEM AS INDICATED ON THE DRAWINGS. ALL OUTLET BOXES FOR TELEPHONE AND/OR DATA JACKS SHALL BE DOUBLE GANG WITH A SINGLE-GANG OPENING.

B. PULL AND LEAVE IN EACH CONDUIT ONE PULL CORD FOR PULLING IN CABLE. ALL WIRING, OUTLETS AND EQUIPMENT SHALL BE PROVIDED AND INSTALLED BY THE OWNERS TELE/DATA SUPPLIER.

C. TELEPHONE SERVICE CONDUITS SHALL BE PROVIDED TO THE PROPERTY LINE OR AS INDICATED ON THE DRAWINGS.

D. THE ELECTRICAL CONTRACTOR SHALL FURNISH AND INSTALL A #6 AWG GREEN COPPER WIRE IN A 3/4" CONDUIT FROM THE NEAREST COLD WATER METAL MAIN TO ALUG AT THE TELEPHONE/DATA BACKBOARD.

PART 9: LIGHTING CONTROLS

A. FURNISH AND INSTALL AN ELECTRONIC TIME CONTROLLER WHERE INDICATED. CONTROLLER SHALL BE CAPABLE OF SWITCHING 40 AMPERES PER POLE CONTINUOUSLY AT 120 VOLTS AND SHALL BE SPST (DPST, 3PST, DPTDT, SPDT, AS REQUIRED).

B. LIGHTING CONTACTORS SHALL SWITCH A LOAD AT 120 VOLTS, 60 HZ AND SHALL HAVE THE NUMBER OF POLES INDICATED ON THE DRAWINGS. THE CONTACTOR SHALL BE CONTINUOUSLY RATED 20 AMPERES PER POLE FOR ALL TYPES OF BALLAST AND TUNGSTEN LIGHTING AND RESISTANCE LOADS.

C. ALL LIGHTING CONTACTORS SHALL BE ELECTRICALLY HELD AND HAVE A NEMA 1 ENCLOSURE UNLESS OTHERWISE NOTED.

PART 10: FIRE STOPPING

A. ALL PENETRATIONS OF NON-RATED PENETRATIONS SHALL BE SEALED WITH RATED MATERIALS MEETING ASTM E-814.

B. PROVIDE FIRE STOPPING DEVICE(S) OR SYSTEM(S) WHICH HAVE BEEN TESTED AND LISTED AS COMPLYING WITH ASTM E-814. INSTALL THE DEVICE(S) OR SYSTEM(S) IN ACCORDANCE WITH THE CONDITIONS OF THEIR LISTING. PROVIDE THE APPROPRIATE DEVICE(S) OR SYSTEM(S) WITH AN “F" RATING EQUAL TO THE RATING OF THE ASSEMBLY BEING PENETRATED.

C. DEVICE(S) AND/OR SYSTEM(S) SHALL BE BY HILTI, 3M OR EQUIVALENT.

D. WHERE OPENINGS FOR INSTALLATION OF ELECTRICAL BOXES EXCEEDS 16 SQUARE INCHES IN RATED WALLS OR PARTITIONS, THE OPENING SHALL BE PROTECTED AS REQUIRED BY THE APPROPRIATE WALL LISTING TYPE.

PART 11: RENOVATION OF EXISTING

A. EACH BIDDER SHALL VISIT THE PROJECT SITE PRIOR TO BID AND FAMILIARIZE HIMSELF WITH THE EXISTING CONDITIONS. FAILURE TO VISIT THE SITE SHALL NOT EXCUSE THE CONTRACTOR FROM PERFORMING THE REQUIRED WORK NOR SHALL IT BE AN ACCEPTABLE REASON FOR REQUESTING ADDITIONS TO THE CONTRACT.

B. EXISTING PORTIONS OF THE FACILITY SHALL REMAIN IN OPERATION DURING THIS RENOVATION AND/OR ADDITION. THE CONTRACTOR SHALL CAUSE AS LITTLE DISRUPTION AS POSSIBLE TO MAINTAIN THE COMFORT AND SAFETY OF THE BUILDING OCCUPANTS. ALL POWER OUTAGES SHALL BE CLOSELY COORDINATED WITH THE OWNER'S REPRESENTATIVE.

C. PROJECT INVOLVES WORK ON EXISTING ELECTRICAL PANELS AND FEEDERS REQUIRED IN OPERATING THE FACILITY. TEMPORARY POWER ARRANGEMENTS SHALL BE MADE TO SERVE THOSE AREAS AFFECTED BY THIS PROJECT.

SEISMIC RESTRAINT OF ELECTRICAL SYSTEMS - DESIGN/BUILD SPECIFICATION

THE ELECTRICAL CONTRACTOR SHALL RETAIN THE SERVICES OF A STRUCTURAL ENGINEER TO DETERMINE SITE CLASSIFICATION AND SEISMIC RESTRAINT REQUIREMENTS FOR ELECTRICAL EQUIPMENT, PIPING, DUCTWORK, ETC. REQUIRED FOR THIS PROJECT. WHERE REQUIRED, THE ELECTRICAL CONTRACTOR SHALL BE RESPONSIBLE FOR PROVIDING RESTRAINTS TO RESIST THE EARTHQUAKE EFFECTS ON THE ELECTRICAL SYSTEM. THE REQUIREMENTS FOR THESE RESTRAINTS ARE FOUND IN THE INTERNATIONAL BUILDING CODE, 2006.

THE ELECTRICAL CONTRACTOR SHALL RETAIN THE SERVICES OF A PROFESSIONAL STRUCTURAL ENGINEER REGISTERED IN THE STATE OF NORTH CAROLINA TO DESIGN SEISMIC RESTRAINT ELEMENTS REQUIRED FOR THIS PROJECT. THE ENGINEER'S COMPUTATIONS, BEARING HIS PROFESSIONAL SEAL, SHALL ACCOMPANY SHOP DRAWINGS WHICH SHOW INTERNATIONAL BUILDING CODE, 2006 COMPLIANCE. COMPUTATIONS AND SHOP DRAWINGS SHALL BE SUBMITTED FOR REVIEW PRIOR TO THE PURCHASING OF MATERIALS, EQUIPMENT, SYSTEMS AND ASSEMBLIES.

THE ELECTRICAL CONTRACTOR SHALL INCLUDE SHOP DRAWINGS OF THE SPECIFIC METHODS OF SEISMIC RESTRAINT TO BE USED FOR THIS PROJECT PRIOR TO INSTALLATION OF PIPING, DUCTWORK AND EQUIPMENT.

INTERNAL SEISMIC RESTRAINT ELEMENTS OF MANUFACTURED EQUIPMENT SHALL BE CERTIFIED BY A PROFESSIONAL ENGINEER RETAINED BY THE MANUFACTURER. SUCH CERTIFICATE APPLIES ONLY TO INTERNAL ELEMENTS OF THE EQUIPMENT. ALL EQUIPMENT ANCHORAGE REQUIREMENTS SHALL BE COORDINATED WITH THE BUILDING STRUCTURE AND SHALL BE COMPATIBLE THERETO. ALL SUCH ANCHORAGE SHALL BE REVIEWED BY THE PROJECT'S ELECTRICAL ENGINEER PRIOR TO INSTALLATION.

THE PROFESSIONAL ENGINEER RETAINED BY THE ELECTRICAL CONTRACTOR FOR SEISMIC RESTRAINT CALCULATIONS AND DESIGN SHALL VISIT THE JOB SITE UPON COMPLETION OF THE SEISMIC RESTRAINT INSTALLATION. THIS ENGINEER SHALL PROVIDE IN WRITING, VERIFICATION OF COMPLIANCE WITH THE APPROVED SEISMIC SUBMITTAL. THIS ENGINEER SHALL ALSO PERFORM ANY SPECIAL INSPECTIONS REQUIRED BY THE INTERNATIONAL BUILDING CODE, 2006. THIS VERIFICATION SHALL BEAR THE ENGINEER'S PROFESSIONAL SEAL. JOB SITE INSPECTION BY OTHER THAN THIS ENGINEER IS NOT ACCEPTABLE.

REVIEW OF THE SEISMIC DESIGN AND SHOP DRAWINGS BY THE PROJECT'S ELECTRICAL ENGINEER, STRUCTURAL ENGINEER OR ARCHITECT SHALL NOT RELIEVE THE CONTRACTOR OF THEIR RESPONSIBILITY TO COMPLY WITH THE SEISMIC OR ANY OTHER REQUIREMENTS OF THE INTERNATIONAL BUILDING CODE, 2012.

APPLICABLE CODES:
ASCE 7-16 AMERICAN SOCIETY OF CIVIL ENGINEERS (ASCE)
ACI 318-11 AMERICAN CONCRETE INSTITUTE (ACI)
CALIFORNIA BUILDING CODE - 2019 EDITION (C.B.C)
CALIFORNIA RESIDENTIAL CODE - 2019 EDITION (C.R.C)
CALIFORNIA MECHANICAL CODE - 2019 EDITION (C.M.C)
CALIFORNIA PLUMBING CODE - 2019 EDITION (C.P.C)
CALIFORNIA ELECTRICAL CODE - 2019 EDITION (C.E.C)
CALIFORNIA FIRE CODE - 2019 EDITION (C.F.C)
CALIFORNIA GREEN CODE - 2019 EDITION (C.E.C)
CALIFORNIA ENERGY CODE - 2019 EDITION (CEnC)
CALIFORNIA GREEN BUILDING STANDARDS CODE - 2019 EDITION (CALGreen)
SPECIAL DESIGN PROVISIONS FOR WIND & SEISMIC - 2015 EDITION (SDPWS)
"ALONG WITH ANY AND ALL OTHER LOCAL AND STATE LAWS AND REGULATIONS".

A SITE REVIEW AND TENTATIVE MAP FOR A 16 UNIT CONDOMINIUM DEVELOPMENT
215 TENNANT AVENUE, MORGAN HILL, CALIFORNIA

SHEET INDEX

NO.	SHEET	DESCRIPTION
1	E-0.0	SPECIFICATIONS NOTES & SHEET INDEX
2	E-0.1	GENERAL NOTES
3	E-0.2	ABBREVIATIONS & SYMBOLS LIST
4	E-0.3	DETAILS
5	E-0.3A	DETAILS
6	E-0.4	SINGLE LINE DIAGRAM, LOAD CALCULATION & EQUIPMENT SCHEDULE
7	E-0.5	PANEL SCHEDULES
8	E-2.1	BUILDING '1' - LOWER, UPPER, & ROOF PLANS
9	E-2.2	BUILDING '2' - LOWER, UPPER, & ROOF PLANS
10	E-3.1	UNIT A - FLOOR PLANS
11	E-3.2	UNIT A - ADU FLOOR PLANS
12	E-3.3	UNIT B - FLOOR PLANS

GOUVIS engineering consulting group, inc.®

15 Studebaker
Irvine
CA 92618

Irvine
tel 949.752.1612
fax 949.752.5321

Palm Springs
tel 760.323.5090

REGISTERED PROFESSIONAL ENGINEER MEHDI HOSSEINZADEH E 22037 ELECTRICAL STATE OF CALIFORNIA

DATE SIGNED: 1/30/24

RESTRICTIVE NOTICE

THESE DESIGNS, DRAWINGS, AND SPECIFICATIONS ARE THE EXCLUSIVE PROPERTY OF GOUVIS ENGINEERING CONSULTING GROUP. THEY ARE THE SUBJECTOF COPYRIGHT AND OTHER LEGAL PROTECTION. THEY MAY BE USED ONLY BY THEIR INTENDED RECIPIENT AND ONLY FOR THE PROJECT DEPICTED HEREIN. NO PART OF THESE DRAWINGS ARE TO BE COPIED, TRANSFERRED, REPRODUCED, NOR CAN THEY BE USED, IN WHOLE OR IN PART, BY ANY OTHER PERSON OR FOR ANY OTHER PROJECT OR STRUCTURE, WITHOUT THE PRIOR EXPRESS WRITTEN CONSENT OF GOUVIS ENGINEERING CONSULTING GROUP

© 2017 GOUVIS ENGINEERING CONSULTING GROUP INC. - ALL RIGHTS RESERVED

PROJECT:
Tenant Square

DEVELOPER:
Osito Holdings LLC

ARCHITECT:
Gary Moore & Associates

LOCATION:
Morgan Hill
Santa Clara
CA

REVISIONS

NO.	DATE	DESCRIPTION
1	02/02/23	PLAN CHECK
2	11/01/23	PLAN CHECK
3	01/30/24	FIRE COMMENT

SHEET NAME:
SPECIFICATIONS NOTES & SHEET INDEX

PROJECT NUMBER:
66074

ENGINEER:
DRAFTER:

SHEET NUMBER:
E-0.0

SPECIFICATIONS NOTES & SHEET INDEX

ISSUED DATE:XX/XX/XX

GENERAL

1. ALL WORK SHALL COMPLY WITH CALIFORNIA CODE OF REGULATIONS 2019 TITLE 24, 2017 N.E.C., & 2019 C.E.C. AND LOCAL CODES. ELECTRICAL WORK SHALL COMPLY WITH CBC 2019 AND ALL EQUIPMENT AND SYSTEMS SHALL BE U.L. LISTED.

2. DRAWINGS ARE NECESSARILY DIAGRAMMATIC BY THEIR NATURE AND ARE NOT INTENDED TO SHOW EVERY CONNECTION IN DETAIL OR EVERY PIPE OR CONDUIT IN ITS EXACT LOCATION. CAREFULLY INVESTIGATE STRUCTURAL AND FINISH CONDITIONS AND COORDINATE THE SEPARATE TRADES IN ORDER TO AVOID INTERFERENCE BETWEEN THE VARIOUS PHASES OF WORK. ORGANIZE AND LAYOUT WORK SO THAT IT WILL BE CONCEALED IN WALLS, FURRED CHASES, AND CEILINGS, ETC., IN FINISHED PORTIONS OF THE BUILDING, UNLESS SPECIFICALLY NOTED TO BE EXPOSED. INSTALL ALL WORK PARALLEL OR PERPENDICULAR TO BUILDING LINES UNLESS OTHERWISE NOTED.

3. INSTALL THE ELECTRICAL SYSTEM USING CONSTRUCTION MEANS, METHODS, AND MATERIALS IN ACCORDANCE WITH THE MANUFACTURER'S SPECIFICATIONS / INSTRUCTIONS, TRADE "BEST PRACTICES" STANDARDS, AND APPLICABLE NATIONAL AND LOCAL CODES.

4. PROVIDE ALL LABOR, MATERIALS, TOOLS, PERMITS, FEES, TRANSPORTATION, ETC REQUIRED TO PROVIDE A COMPLETE AND FULLY-FUNCTIONING ELECTRICAL SYSTEM TO THE OWNER'S SATISFACTION.

5. ALL ELECTRICAL EQUIPMENT AND DEVICES SHALL BE NEW AND SUPPLIED WITH ALL THE NECESSARY FITTINGS, ATTACHMENTS, AND ACCESSORIES FOR A COMPLETE INSTALLATION.

6. CONTRACTOR TO PROVIDE SUBMITTALS FOR ALL ELECTRICAL EQUIPMENT, ELECTRICAL MATERIALS AND LIGHTING FIXTURES FOR APPROVAL PRIOR TO ORDERING.

7. SWITCHGEAR DIMENSIONS ARE BASED ON THE APPROXIMATE DIMENSIONS OF THE MANUFACTURER SPECIFIED IN THE PLANS. IT IS THE CONTRACTORS RESPONSIBILITY TO VERIFY THE EQUIPMENT WILL FIT IN THE ACTUAL SPACE PRIOR TO ORDERING THE EQUIPMENT.

8. CONTRACTOR SHALL REVIEW THE ELECTRICAL, AND OTHER CONSULTANTS DRAWINGS PRIOR TO STARTING ANY WORK AND INFORM THE ENGINEER OF ANY DISCREPANCIES, OMISSIONS, OR IF CLARIFICATIONS ARE REQUIRED TO COMPLETE THE INSTALLATION PRIOR TO COMMENCING THE WORK. CONTRACTOR, ENGINEER, ARCHITECT AND OWNER SHALL SCHEDULE A POST BID/PRECONSTRUCTION MEETING TO REVIEW AND DISCLOSE ALL DISCREPANCIES, OMISSIONS AND/OR CLARIFICATION RELATED TO THE CONSTRUCTION DOCUMENTS AND/OR SPECIFICATIONS NOTED BY CONTRACTOR AND OR/OWNER AS PART OF THE PRECONSTRUCTION COORDINATION PROCESS.

9. REFER AND REVIEW TO THE; PLUMBING, MECHANICAL/HVAC, LOW VOLTAGE, COMMUNICATION, ACCESS CONTROL, INTERIOR DESIGN, ARCHITECTURAL AND STRUCTURAL DRAWINGS PRIOR TO, AND DURING, THE ELECTRICAL INSTALLATION TO ENSURE ALL ELECTRICAL EQUIPMENT AND ASSOCIATED DISTRIBUTION PATHWAY ARE CLEAR OF AND COORDINATED WITH THE OTHER TRADES INSTALLATION REQUIREMENTS.

10. ALL HORIZONTAL AND VERTICAL PIPING, CONDUITS, AND DUCTS IN/THROUGH ELEVATED OR ON GRADE SLABS SHALL BE INSTALLED PER THE MANUFACTURERS INSTALLATION MANUAL AND MEET THE CLEARANCES SHOWN ON DETAIL E-0.3 OR HAVE APPROVAL IN WRITING FROM THE STRUCTURAL ENGINEER OF RECORD. AVOID ANY HORIZONTIAL/VERTIAL PIPING, CONDUITS AND DUCTS IN AREAS OF CONGESTED REINFORCEMENT SUCH AS COLUMNS, COLUMN CAPS AND COLUMN STRIPS.

11. PROVIDE ALL REQUIRED CONTROL WIRES, RELAYS, DISCONNECTS, STARTERS, CONDUITS, TIME SWITCHES, AND OUTLETS REQUIRED BY THE OTHER TRADES SYSTEMS AS INDICATED ON THEIR DRAWINGS. ALL ELECTRICAL WORK AND MATERIALS INDICATED IN THE ABOVE CONSULTANT'S (NOTE 8) DRAWINGS SHALL BE SUPPLIED AND INSTALLED BY THE ELECTRICAL CONTRACTOR UNDER THIS SCOPE OF WORK.

12. ALL EQUIPMENT SHALL BE LISTED BY A RECOGNIZED TESTING AGENCY AND SUPPORTED ACCORDING TO APPLICABLE OSHA REQUIREMENTS.

13. CONTRACTOR TO WARRANTY ALL WORK COMPLETED FOR A PERIOD OF ONE YEAR AFTER THE OWNER'S ACCEPTANCE DATE. ANY LABOR OR MATERIALS REQUIRED TO CORRECT FAULTY OR DEFECTIVE WORK WITHIN THE WARRANTY PERIOD SHALL BE CORRECTED AT THE EXPENSE OF THE CONTRACTOR. ANY WORKMANSHIP OR EQUIPMENT FOUND TO BE FAULTY OR DEFICIENT DURING THAT PERIOD SHALL BE CORRECTED AT ONCE, UPON WRITTEN NOTIFICATION, AT THE EXPENSE OF THE ELECTRICAL CONTRACTOR.

14. ALL BROCHURES, OPERATING MANUALS, CATALOGS, SHOP DRAWINGS, "AS-BUILTS" CONSTRUCTION DRAWINGS, ETC., SHALL BE TURNED OVER TO THE OWNER WITHIN 30 DAYS OF THE COMPLETION OF THE JOB.

15. CONTRACTOR ELECTRICAL "AS-BUILTS DRAWINGS" ARE TO INDICATE THE FINAL EQUIPMENT/DEVICE LOCATIONS, CONDUIT ROUTING, PANEL SCHEDULES, SINGLE LINE DIAGRAMS, ETC. - IN CAD OR EQUIVALENT FORMAT FOR THE OWNER'S RECORD AT THE COMPLETION OF THE JOB.

16. PROVIDE THE OWNER WITH 1 COPY OF ALL OPERATION AND MAINTENANCE MANUALS FOR LIGHTING, LIGHTING CONTROL, AND ELECTRICAL SYSTEMS.

17. LABEL ELECTRICAL SERVICE EQUIPMENT WITH THE MAXIMUM AVAILABLE FAULT CURRENT AT THE INCOMING TERMINALS OF THE EQUIPMENT PER CEC 110.24.

18. PROPERLY LABEL ALL ELECTRICAL ROOMS / CABINETS, ELECTRICAL PANELS, TIME SWITCHES, PANEL SCHEDULES, AND MULTI-GANG METERS WITH LAMINATED PLACARDS. ADDITIONALLY, PROVIDE ALL LABELING AND PLACARDS AT SPECIFIC LOCATIONS INDICATED IN THE CONTRACT DOCUMENTS.

19. CONTRACTOR SHALL VISIT THE SITE, VERIFY THE EXACT CONDITIONS RELATING TO THE WORK AND SHALL OBTAIN SUCH INFORMATION AS MAY BE NECESSARY TO PRESENT A CONCLUSIVE BID. NO ALLOWANCE SHALL BE MADE FOR ANY EXTRA EXPENSE, DUE TO FAILURE OF THE CONTRACTOR TO MAKE SUCH A FIELD VERIFICATION. BY SUBMITTING A PROPOSAL FOR THE WORK INCLUDED IN THE CONTRACT, THE CONTRACTOR SHALL BE DEEMED TO HAVE MADE THE FIELD VERIFICATION AND ACCEPTS ALL JOB SITE CONDITIONS.

20. FINAL LOCATIONS OF EQUIPMENT AND/OR DEVICES SHALL BE VERIFIED WITH THE OWNER/ARCHITECT PRIOR TO ROUGH-IN.

21. CONTRACTOR SHALL PROVIDE THE REQUIRED LABOR, MATERIAL, INSURANCE, EQUIPMENT, INSTALLATION PROCEDURES AND PRACTICES/ MEANS AND METHODS, CONSTRUCTION TOOLS AND STORAGE, TRANSPORTATION, ETC. FOR A COMPLETE AND PROPERLY OPERATING ELECTRICAL SYSTEM.

22. ALL MATERIALS SHALL BE NEW, AND OF THE SAME MANUFACTURER FOR EACH CLASS OR GROUP OF EQUIPMENT. MATERIALS SHALL BE LISTED AND APPROVED BY UNDERWRITER'S LABORATORIES, AND SHALL BEAR THE INSPECTION LABEL WHERE SUBJECT TO SUCH APPROVAL. MATERIALS SHALL MEET WITH THE APPROVAL OF THE DIVISION OF INDUSTRIAL SAFETY, AND ALL GOVERNING BODIES HAVING JURISDICTION. MATERIALS SHALL BE MANUFACTURED IN ACCORDANCE WITH APPLICABLE STANDARDS ESTABLISHED BY A.N.S.I., U.L., N.E.M.A. AND N.B.F.U. INSTALL PER MANUFACTURERS' RECOMMENDATIONS.

23. CONTRACTOR SHALL SECURE ANY PAY FOR ALL NECESSARY BUILDING PERMITS. CONTRACTOR SHALL COORDINATE TEMPORARY CONSTRUCTION REQUIREMENTS INCLUDING POWER, SECURITY, STORAGE, SAFETY, ETC. WITH ALL TRADES PRIOR TO COMMENCING CONSTRUCTION. INCLUDE ALL OF THESE COSTS IN THE BID.

24. ALL TRADE LABOR SHALL BE DISCIPLINE TRAINED, COMPETENT AND SKILLED PERSONNEL. PERFORM ALL WORK CONSISTENT WITH THE BEST POSSIBLE TRADE PRACTICES WITH ADHERENCE TO ALL OSHA GUIDELINES.

25. WHERE A CONFLICT OCCURS BETWEEN THIS SPECIFICATION AND OTHER SPECIFICATIONS ISSUED AS A PART OF THE CONTRACT DOCUMENTS, THE MORE STRINGENT REQUIREMENT SHALL PREVAIL.

26. ALL ADDENDA AND CHANGE ORDERS MUST BE APPROVED BY THE OWNER IN ADVANCE OF STARTING THE WORK.

27. CONTRACTOR SHALL SUBMIT SHOP DRAWINGS FOR ALL MAJOR PIECES OF ELECTRICAL EQUIPMENT INCLUDING, BUT NOT LIMITED TO; SWITCHBOARDS, PANELBOARDS, TRANSFORMERS, ALL LIGHTING FIXTURES AND ASSOCIATED CONTROLS. SUBMITTALS SHALL BE MADE TO THE ARCHITECT AS SOON AS IS PRACTICABLE AFTER AWARD OF CONTRACT.

POWER

1. ALL EXTERIOR ELECTRICAL EQUIPMENT SHALL BE WEATHERPROOF (MIN. NEMA 3R).

2. ALL EXTERIOR JUNCTION BOXES SHALL BE LISTED AS WEATHERPROOF WITH WEATHERPROOF COVERS.

3. ALL LIGHTING SWITCHES SHALL BE RATED FOR 120-277V, "DECORA" STYLE, AND WHITE UNLESS OTHERWISE NOTED ON THE PLANS OR OWNER'S SPECIFICATIONS.

4. ALL GENERAL USE RECEPTACLES SHALL BE NEMA 5-15R, "DECORA" STYLE, AND WHITE UNLESS OTHERWISE NOTED ON THE PLANS OR OWNER'S SPECIFICATIONS.

5. ALL RECEPTACLES IN DWELLING UNITS, GUEST ROOMS AND GUEST SUITES IN HOTELS AND MOTELS, AND CHILD CARE FACILITIES SHALL BE TAMPER- RESISTANT TYPE (NEC 406.12).

6. PROVIDE COMBINATION A.F.C.I./G.F.C.I. TYPE BREAKERS FOR ALL CIRCUITS FEEDING OUTLETS AND LIGHTS IN DINING ROOM, KITCHEN, LIVING ROOM, ETC. PER SECTION 210.12.

7. ALL OUTDOOR RECEPTACLES SHALL BE GFCI PROTECTED AND LISTED AS "WR" WEATHER RESISTANT TYPE PER CEC 406.9. OUTDOOR RECEPTACLES IN DAMP LOCATIONS SHALL HAVE WEATHERPROOF COVERS. OUTDOOR RECEPTACLES IN WET LOCATIONS SHALL HAVE "IN-USE" TYPE WEATHERPROOF COVERS.

8. NO PLASTIC ELECTRICAL BOXES ARE TO BE USED. IT IS ACCEPTABLE FOR RESIDENTIAL PER ELECTRICAL CODE AND LOCAL JURISDICTION CODE.

9. PER 714.4.2 CBC ELECTRICAL OUTLET BOXES IN WALL OR CEILING SHALL NOT EXCEED 16 SQUARE INCHES PER ONE HUNDRED SQUARE FEET OF WALL.

10. RECESSED ELECTRICAL PANELS IN RATED ASSEMBLIES SHALL BE "FIREBOXED" AND CERTIFIED TO MAINTAIN THE ORIGINAL RATING OF THE WALL ASSEMBLY.

11. HALF SIZED OR TANDEM CIRCUIT BREAKERS MAY BE USED ONLY IF THE ELECTRICAL EQUIPMENT IS SPECIFICALLY LISTED TO RECEIVE SUCH DEVICES. ALL OTHER PANEL LOCATIONS - FULL SIZE CIRCUIT BREAKER MUST BE USED.

12. ALL BRANCH CIRCUIT BREAKERS SHALL BE NQOD (OR APPROVED EQUAL) AND HAVE MIN 75° RATED TERMINATION LUGS.

13. ALL BRANCH CIRCUIT BREAKERS FEEDING DWELLING UNIT LIGHTING AND POWER RECEPTACLES SHALL BE LISTED "COMBINATION TYPE AFCI" AND INSTALLED AT THE ORIGIN OF THE BRANCH CIRCUIT [210.12(A)(1)]

14. ALL PENETRATIONS (ELECTRICAL BOXES, CABLES, CONDUITS AND ETC…) THROUGH RATED ASSEMBLIES SHALL BE SEALED OR FIRE STOPPED TO MAINTAIN THE RATING OF THE ASSEMBLY WITH A LISTED FIRE STOPPING SYSTEM (I.E. 3M FIRE BARRIER OR EQUAL) IN COMPLIANCE WITH CBC SECTION 712. CONTRACTOR TO INSTALL FIRE STOPPING SYSTEM PER MANUFACTURER'S INSTRUCTIONS AND SPECIFICATIONS.

15. REFER TO ACOUSTICAL ANALYSIS / SPECIFICATIONS; PROVIDE PUTTY PADS OR OTHER SYSTEMS AS REQUIRED FOR SOUND ATTENUATION.

16. FOR DEVICES WITH SIMILAR FIRE BARRIER REQUIREMENTS. IF THE DENSITY OF OUTLET OPENINGS EXCEEDS 100 SQ. IN. FOR ANY 100 SQ.FT. OF WALL, THEN PUTTY PADS ARE REQUIRED FOR THE ENTIRE WALL.

17. PROVIDE EXPANSION AND DEFLECTION FITTINGS, WITH BONDING JUMPERS AT ALL BUILDING EXPANSION OR SEISMIC JOINT CROSSING.

18. WIRING SIZE PER CIRCUIT BREAKER TRIP SETTING AND NEC TABLE 310-16. ALL CONDUCTORS ARE MINIMUM #12 THHN/THWN-CU UNLESS OTHERWISE NOTED. MINIMUM 3/4" CONDUIT FOR PVC UNDERGROUND CONDUIT.

19. ALL WIRING TO COMPLY WITH CEC ARTICLE 300. CONDUCTORS SHALL BE INSTALLED IN CODE APPROVED RACEWAYS AS REQUIRED.

20. INTERIOR WIRING PERMITTED TO BE TYPE NM CABLE IN ACCORDANCE WITH CEC ARTICLE 334 AND LOCAL CODES IN ONE- AND TWO- FAMILY AND MULTIFAMILY DWELLINGS OF TYPE III, IV, AND V CONSTRUCTION. IN OTHER TYPES OF TYPE III, IV, AND V CONSTRUCTION NM CABLE **MAY BE ACCEPTABLE**, EXCEPT FOR EXPOSED IN ACCESSIBLE DROPPED CEILINGS, EXPOSED CEILINGS OR WHERE PROHIBITED IN CEC 334.12. CONTRACTOR TO VERIFY NM CABLE WIRING METHOD WITH AUTHORITY HAVING JURISDICTION PRIOR TO BIDDING THE JOB. MINIMUM WIRING SIZE PER THE 60 DEGREE "C" COLUMN OF CEC TABLE 310.15(B)(16) (I.E. #12 CU FOR 20A CIRCUIT BREAKERS).

21. IT IS PROHIBITED TO SHARE NEUTRAL CONDUCTORS FOR THREE SINGLE PHASE CIRCUITS PER CEC 200.4.

22. AS REQUIRED, ALL OVERSIZED FEEDERS THAT WERE ADJUSTED IN SIZE TO COMPENSATE FOR VOLTAGE DROP SHALL BE PROVIDED WITH ADAPTER LUGS OR SPLICE BOX. ADAPTER LUGS SHALL BE PROVIDED IF SIZE IS AVAILABLE, OTHERWISE PROVIDE CABLE SPLICES IN THE SPLICE BOX TO REDUCE CABLES TO THE MAXIMUM SIZE THAT THE BREAKER LUGS CAN ACCOMMODATE.

23. CLASS 2 & 3 WIRING:
CABLES INSTALLED IN PLENUMS SHALL BE TYPE CL2P OR CL3P (CLASS 2 OR 3 RESPECTIVELY). CABLES INSTALLED AS RISERS (CABLES INSTALLED IN VERTICAL RUNS AND PENETRATING MORE THAN ONE FLOOR, OR CABLES INSTALLED IN VERTICAL RUNS IN A SHAFT) SHALL BE TYPE CL2R OR CL3R (CLASS 2 OR 3 RESPECTIVELY). CABLES INSTALLED IN CABLE TRAYS MAY BE TYPE PLTC, CL3P, CL3R, CL3, CL2P, CL2R, OR CL2.

24. WHERE MORE THAN TWO NM CABLES ARE INSTALLED THROUGH WOOD FRAMING, SUCH AS TOP OR BOTTOM PLATES WHERE THE OPENING IS SEALED WITH INSULATION OR SEALING (FIRE RATED) FOAM, ETC., THE ALLOWABLE AMPACITY OF EACH CONDUCTOR SHALL BE ADJUSTED IN ACCORDANCE WITH TABLE 310.15. REVIEW CEC 334.80.

25. ALL CABLE TRAYS CONTAINING TYPE SE, MC, MI, OR IGS SERVICE ENTRANCE CABLES MUST BE LABELED "CABLE TRAY CONTAINS SERVICE ENTRANCE CONDUCTORS".

26. ALL ELECTRICAL CONDUCTORS WITHIN 6' OF THE ATTIC MUST BE PROTECTED AS PER CEC 320.23A, 330.23, 334.23

27. ALL ELECTRICAL EQUIPMENT, BREAKERS, HOUSE PANELS, AND TIME SWITCHES DIRECTORIES SHALL BE PROPERLY TYPED LABELED.

GROUNDING

1. THE ELECTRICAL SYSTEM SHALL BE GROUNDED AND BONDED IN ACCORDANCE WITH NEC ART. 250 AS ADOPTED AND AMENDED BY THE CEC AND THE ADOPTED EDITION OF THE N.E.C. AS IT RELATES TO OTHER APPLICABLE CODES.

2. SEPARATELY DERIVED SYSTEMS SHALL BE GROUNDED PER ART. 250.30 (A) FOR GROUNDED SYSTEMS OR 250.30(B) FOR UNGROUNDED SYSTEMS AND SHALL COMPLY WITH ART. 250.20, 250.21, 250.22, AND 250.26.

3. THE MAXIMUM RESISTANCE TO GROUND SHALL NOT EXCEED 5 OHMS TO GROUND.

4. CONTRACTOR SHALL PROVIDE ALL INSTRUMENTATION AND TESTS FOR MEASURING THE RESISTANCE OF EACH PHASE TO GROUND. A PROPERLY CALIBRATED "MEGGER" TYPE INSTRUMENT SHALL BE USED. IN THE EVENT THAT HIGH RESISTANCE TO GROUNDS ARE FOUND, THEY SHALL BE ISOLATED. MAKE PROPER CORRECTIONS TO RESTORE THE RESISTANCE TO AN ACCEPTABLE VALUE. THIS SHOULD BE PROVIDED BY AN INDEPENDENT, APPROVED TESTING COMPANY.

5. ONSITE INDEPENDANT TESTING OF EQUIPMENT SHALL BE REQUIRED FOR SWITCHGEAR OVER 1,000 AMPS.

6. PROVIDE BONDED GROUND TO ALL METALLIC PIPE WITHIN THE UNIT, WHEN THERE IS NON METALLIC PIPING FEEDING INTO EACH UNIT MAKING EACH UNIT ISOLATED FROM THE MAIN PIPING SYSTEM WITHIN BUILDING. COMPLY WITH C.E.C 250.104(A)(1); 250.104(A)(2); 250.122.

7. NEUTRAL BAR SHALL BE ISOLATED FROM THE GROUNDING BUSBAR AT ALL PANELBOARDS SERVING INDIVIDUAL UNITS.

LIGHTING FIXTURES

1. IT IS THE CONTRACTOR'S RESPONSIBILITY TO VERIFY ACTUAL CEILING CONSTRUCTION TYPE AS DEFINED ON THE ARCHITECTURAL DRAWINGS AND FURNISH ALL LIGHTING FIXTURES WITH THE CORRECT MOUNTING DEVICES WHETHER OR NOT SUCH VARIATIONS ARE INDICATED BY THE FIXTURE CATALOG NUMBER. THE CONTRACTOR SHALL VERIFY DEPTH OF ALL RECESSED LIGHTING FIXTURES WITH ARCHITECTURAL DRAWINGS PRIOR TO ORDERING FIXTURES. ANY DISCREPANCIES THAT WOULD CAUSE RECESSED FIXTURES NOT TO FIT INTO CEILING SHALL BE REPORTED TO THE ARCHITECT PRIOR TO ORDERING FIXTURES. THE CONTRACTOR SHALL VERIFY THE FIXTURE VOLTAGE WITH THE LIGHTING PLAN AND ORDER FIXTURES WHICH WILL OPERATE AT THE VOLTAGE TO WHICH THEY ARE CONNECTED.

2. ALL HANDICAP UNIT LIGHTING SWITCHES, RECEPTACLES, THERMOSTATS, AND OTHER CONTROLS SHALL BE LOCATED NO HIGHER THAN +48" AND NO LOWER THAN +15". ON THE KITCHEN COUNTER OR BATHROOM LAVATORY MAXIMUM HEIGHT FOR RECEPTACLES SHALL BE +44". SEE MOUNTING DIAGRAM AS PART OF THIS SET.

3. RECESSED LIGHTING FIXTURES WITH DIRECT CONTACT WITH INSULATION SHALL BE TYPE IC (LISTED BY RECOGNIZED TESTING AGENCY). RECESSED NON-TYPE IC FIXTURES SHALL HAVE A MINIMUM OF 3" CLEAR FROM INSULATION AND 1" FROM COMBUSTIBLE MATERIALS (NON-TYPE IC RECESSED FIXTURES ARE NOT PERMITTED IN RESIDENTIAL UNITS).

4. RECESSED LIGHTING IN RATED ASSEMBLIES SHALL BE EITHER "FIREBOXED" TO MAINTAIN THE RATING OF THE ASSEMBLY OR UTILIZE A LISTED FIXTURE WITH ENCLOSURE THAT MAINTAINS THE ORIGINAL RATING OF THE ASSEMBLY.

5. LIGHT FIXTURE RECESSED IN CEILINGS WHICH HAVE A ONE HOUR OR MORE FIRE RATING SHALL BE ENCLOSED IN A BOX WHICH HAS A FIRE RATING (IC) EQUAL TO THAT OF THE CEILING. PROVIDE MINIMUM OF 3" CLEAR FROM ALL SIDES AND TOP OF ENCLOSURE TO CEILING. LIGHTING FIXTURES IN CONTACT WITH INSULATION TO BE U.L LISTED FOR THERMAL BARRIER "CHICAGO PLENM". ALL BALLASTS FOR INDOOR 4 FT. FLUORESCENT IN COMMON AREA SUCH AS RECREATION, MAINTENANCE BLDG., SHALL BE "ENERGY SAVING TYPE" CBM AND U.L. LISTED.

6. CEILING INSULATION SHALL BE INSTALLED TO ALLOW 3" MINIMUM CLEARANCE FROM SIDES AND TOP OF RECESSED LIGHT FIXTURES.

7. RECESSED LIGHTING FIXTURE IN 1 HR. RATED AREAS REQUIRE BOX BOARD SHELL MINIMIZE PENETRATIONS INTO 1 HR. WALL BETWEEN 2 DWELLING UNITS. INSTALL NMC IN CONDUIT AND SEAL WITH PLASTER, OR FIRE CAULK, INSIDE THE ENDS OF CONDUIT (TO PREVENT SPREAD OF SMOKE OR FIRE).

8. IT IS THE INTENT OF THIS PROJECT, TO USE THE HIGHEST EFFICACY LIGHTING PRODUCTS AVAILABLE AND TO USE LED (LIGHT EMITTING DIODE) TYPE LUMINARIES WITH 3000k LIGHT TEMPERATURES AS INDICATED ON THE LUMINARIES SCHEDULE.

9. WHERE SPECIFIED, FLUORESCENT BALLASTS SHALL BE ELECTRONIC TYPE. HARMONIC CONTENT SHALL NOT EXCEED 10% ADVANCE MARK V OR EQUAL.

10. WHERE SPECIFIED, FLUORESCENT AND HID BALLASTS SHALL BE HIGH POWER FACTOR BALLASTS AND FOUR PIN, 3000 DEGREE KELVIN LAMPS.

11. FLUORESCENT LAMP SHALL BE 32 WATT T8, 3000 DEGREE KELVIN, SYLVANIA OR EQUAL.

12. HIGH EFFICACY LUMINARIES SHALL BE DEFINED AS FOLLOWS: 30 LUMENS PER WATT (FOR LAMPS 5W OR LESS) 40 LUMENS PER WATT (FOR LAMPS 6W-15W) 50 LUMENS PER WATT (FOR LAMPS 16W-40W)

13. MEDIUM AND CANDELABRA BASED SCREW-IN LAMPS DO NOT QUALIFY AS HIGH EFFICACY. GU-24 PIN BASES QUALIFY AS HIGH EFFICACY

14. VERIFY MOUNTING HEIGHT OF ALL WALL MOUNTED FIXTURES WITH ARCHITECT PRIOR TO ROUGH-IN.

15. ALL WALL FIXTURES SHALL BE INSTALLED SUCH THAT THE LOWEST PORTION OF THE FIXTURE PROTRUDING > 4" IS 80" ABOVE THE FINISHED GRADE OR HIGHER.

16. REFER TO ARCHITECTURAL REFLECTED CEILING PLANS FOR EXACT LOCATION OF ALL LIGHT FIXTURES.

17. LUMINARIES FOR GENERAL LIGHTING IN KITCHEN SHALL HAVE LAMPS WITH AN EFFICACY OF NOT LESS THAN 40 LUMENS PER WATT. A LUMINAIRE WHICH IS THE ONLY LIGHTING IN A KITCHEN WILL BE CONSIDERED GENERAL LIGHTING. GENERAL LIGHTING SHALL BE CONTROLLED BY THE MOST ACCESSIBLE SWITCH(ES) IN THE KITCHEN. ADDITIONAL LUMINARIES TO BE USED ONLY FOR SPECIFIC DECORATIVE EFFECTS NEED NOT MEET THIS REQUIREMENT. U.N.O

18. EACH ROOM CONTAINING A WATER CLOSET SHALL HAVE AT LEAST ONE LUMINAIRE WITH LAMPS WITH AN EFFICACY OF NOT LESS THAN 40 LUMENS PER WATT. IF THERE IS MORE THAN ONE LUMINAIRE IN THE ROOM THE HIGH EFFICACY LUMINARIES SHALL BE SWITCHED AT AN ENTRANCE TO THE ROOM.

19. ALL RECESSED LUMINARIES IN INSULATED CEILINGS SHALL BE TESTED AND LISTED FOR ZERO CLEARANCE INSULATION COVER (IC) AND AIR TIGHT (AT) BY RECOGNIZED TESTING LABORATORIES. ELECTRICAL CONTRACTOR TO VERIFY THIS INFORMATION BEFORE PURCHASING DOWNLIGHT HOUSING.

20. WHERE LOW LEVEL EXIT SIGNS ARE SHOWN ON PLANS, THEY SHALL BE MOUNTED NOT LESS THAN 6" AND NO MORE THAN 8" FROM FINISH FLOOR TO BOTTOM OF SIGN AND 4" FROM DOOR FRAME TO CLOSEST EDGE OF SIGN. PROVIDE LOW LEVEL EXIT SIGNS AS REQUIRED PER CODE.

21. ALL FIXTURES INDICATED WITH "COLOR AS SELECTED BY THE ARCHITECT" SHALL BE PROVIDED WITH CUSTOM COLORS PER THE ARCHITECT. SUBMIT SAMPLE COLOR CHIPS TO THE ARCHITECTS PRIOR TO ORDERING FIXTURES. TRIM RINGS FOR RECESSED DOWNLIGHTS SHALL BE COLOR AS SELECTED BY THE ARCHITECT. VERIFY COLOR SELECTION WITH THE ARCHITECT.

22. FOR OUTDOOR LIGHTING BRANCH CIRCUITS FROM BUILDING, INSTALL A RECESSED 4S, 2 1/8" (MIN) DEEP J-BOX WITH 2-GANG SWITCH RING GASKET WEATHERPROOF BLANK METAL COVER AT +12" TYPICAL.

23. POLE LIGHT AND POLE BASE COVER SHALL BE PRIMED WITH ONE COAT OF IRON OXIDE RUST - INHIBITIVE PRIME BASE COVER SHALL BE TWO PIECE HYDRO FORMED ALUMINUM BAKED POWDER URETHANE FINISHED COAT SELECT BY OWNER AND PAINTED BY MANUFACTURER. REFER TO STRUCTURAL DRAWINGS FOR CONCRETE BASE POLE DIMENSIONS.

24. EXTERIOR LIGHTING SHALL BE "DARK/NIGHT SKY" COMPLIANT AS DEFINED AND ADOPTED BY THE LOCAL AHJ. AT A MINIMUM, THE LIGHT SOURCE SHALL BE SHIELDED AND NOT DIRECTLY VISIBLE AS DETERMINED BY THE AHJ.

MECHANICAL SYSTEM

1. VERIFY EXACT LOCATIONS AND ORIENTATION OF ALL MECHANICAL EQUIPMENT WITH MECHANICAL DRAWINGS. FIELD VERIFY CONDITIONS WITH MECHANICAL CONTRACTOR PRIOR TO ROUGH-IN.

2. REFER TO THE MECHANICAL DRAWINGS FOR EXACT EQUIPMENT RATINGS AND ELECTRICAL REQUIREMENTS. COORDINATE WITH THE INSTALLER OF THE HVAC SYSTEMS AND PROVIDE ALL CONDUIT, WIRING, TIME CLOCKS, STARTERS, CONTROL DEVICES, RELAYS, DISCONNECT SWITCHES, FIRE SMOKE DAMPERS, ETC. FOR THE PROPER OPERATION OF THE MECHANICAL SYSTEMS. REFER TO THE MECHANICAL DRAWINGS AND ADDENDUMS FOR ADDITIONAL ELECTRICAL REQUIREMENTS.

3. INSTALL 8#14-CU CABLE FROM FAN COIL (FAU) TO HEAT PUMP (CONDENSING UNIT) AND INSTALL FUSIBLE DISCONNECT SWITCH NEMA -3R IN-LINE OF SIGHT OF EQUIPMENT. INSTALL FUSE(S) AS INDICATED ON NAME PLATE.

4. ALL EQUIPMENT, ENCLOSURES, DEVICES, DISCONNECT SWITCHES, CONNECTIONS, ETC. LOCATED ON THE ROOF SHALL BE WEATHERPROOF - NEMA 3R.

5. DISCONNECT SWITCHES SHALL BE HEAVY DUTY HORSEPOWER RATED. SIZE SWITCH AND FUSED PER THE NAMEPLATE VALUE ON THE MECHANICAL UNIT.

FIRE ALARM

1. SUBMIT A VARIANCE TO SEPARATE FIRE ALARM.

ADDITIONAL OTHER NOTES

1. ALL EQUIPMENT SHALL BE MOUNTED AND SUPPORTED ACCORDING TO THE OSHA REQUIREMENTS.

2. SWITCHGEAR IS BASED ON DIMENSIONAL INFORMATION PROVIDED BY EATON OR OTHER MANUFACTURER. IT IS THE RESPONSIBILITY OF THE CONTRACTOR TO VERIFY THAT THE SWITCHGEAR INTENDED FOR USE AT THIS FACILITY, FITS THE SPACES PROVIDED.

3. CONTRACTOR TO CONFIRM THE LOW VOLTAGE (<110v) CABLING REQUIREMENTS PRIOR TO BIDDING THE JOB. THE ELECTRICAL CONTRACTOR SHALL FURNISH AND INSTALL BELDEN CA. NO. 9248 RG6/U TYPE COAXIAL CABLE TRANSMISSION LINE (CONFIRM EXACT CABLE TYPE WITH COMMUNICATIONS VENDOR FOR THE PROJECT) WITH INDIVIDUAL HOMERUNS FROM COMMUNICATIONS MPOE ROOM TO CATV TERMINAL SERVICE BOX AT IDF ROOMS AND TO UNIT HSD BOX.

4. PROVIDE A MINIMUM OF A 4FT X 8FT X 3/4IN FIRE RATED PLYWOOD BACKBOARD IN EACH MPOE AND IDF ROOM, WITH A #6 COPPER (MIN) GROUND BONDED TO BUILDING GROUNDING SYSTEM. PROVIDE A DEDICATED QUAD PLEX RECEPTACLE PROTECTED BY A DEDICATED 20A/1P CIRCUIT IN THE MPOE AND EACH IDF ROOM, FOR THE CATV / PHONE PROVIDERS. FOR EXACT SIZE AND MORE DETAILS, REFER TO LOW VOLTAGE CONSULTANT.

5. CONTRACTOR TO VERIFY MIN. DIMENSIONS REQUIRED FOR EQUIPMENT SIZES & CLEARANCES IN THE ELECTRICAL ROOM WITH ACCOMMODATION FOR LOW VOLTAGE, GAS, ETC. WHEN APPLICABLE PRIOR TO PLACING THE ORDER FOR SUCH EQUIPMENT & REPORT ANY DISCREPANCY TO THE OWNER, ARCHITECT & ENGINEER. AN APPROVED EQUIPMENT SUBMITTAL IS NOT A CONTRACTOR VERIFICATION OF EQUIPMENT CLEARENCES AND DIMENSIONS AT THE ELECTRIC ROOM - AS REQUIRED ABOVE.

6. PENETRATIONS IN PARTY WALLS SHALL BE ACOUSTICALLY SEALED WITH "POLYCEL" AROUND NMC, CABLE, AND OTHER DEVICES SUCH AS RECEPTACLES, J-BOXES, ETC. ELECTRICAL DEVICES INSTALLED IN OPPOSITE FACES OF PARTY OR DIVISION WALL SHALL BE SEPARATED HORIZONTALLY NOT LESS THAN 24 INCHES. (IN DIFFERENT STUD BAYS FOR WOOD WALLS).

TYPICAL DWELLING NOTES

1. UTILIZE THE RESPECTIVE TYPICAL DWELLING ELECTRICAL PLANS FOR PRICING OF WIRING, DEVICES, AND EQUIPMENT IN EACH DWELLING UNIT. TYPICAL DWELLING ELECTRICAL PLANS INDICATE QUANTITIES OF ALL WIRING, DEVICES, AND EQUIPMENT IN EACH DWELLING UNIT (REGARDLESS OF EXACT DWELLING LAYOUT/DIMENSIONS). TYPICAL DWELLING ELECTRICAL PLANS INDICATE THE GENERAL ARRANGEMENT AND APPROXIMATE LOCATIONS OF ALL WIRING, DEVICES. AND EQUIPMENT IN EACH DWELLING UNIT AND MUST BE ADJUSTED FOR EXACT DWELLING LAYOUT/DIMENSIONS.

2. PROVIDE EXACT LOCATIONS AND LAYOUT OF ALL WIRING, DEVICES, AND EQUIPMENT IN EACH DWELLING UNIT AS PER THE ACTUAL DWELLING ARCHITECTURAL LAYOUT/DIMENSIONS. VERIFY. COORDINATE. AND ADJUST EXACT DEVICE/EQUIPMENT LOCATIONS TO SUIT THE EXACT LAYOUT AND CONFORM WITH ALL APPLICABLE NEC LAYOUT/LOCATION REQUIREMENTS.

3. ACTUAL DWELLING ARCHITECTURAL LAYOUT/DIMENSIONS FOR EACH TYPICAL DWELLING TYPE MAY VARY SLIGHTLY FROM UNIT TO UNIT. OVERALL FLOOR ELECTRICAL PLANS GENERALLY INDICATE EXACT LAYOUTS OF EACH INDIVIDUAL DWELLING UNIT. REFER TO ARCHITECTURAL DRAWINGS FOR EXACT INDIVIDUAL DWELLING LAYOUTS AND DIMENSIONS.

4. LOCATE DEVICES IN SUCH A MANNER TO MAINTAIN ANY REQUIRED FIRE RATING AND SOUND TRANSMISSION INTEGRITY IN ACCORDANCE WITH ALL APPLICABLE CODES AND STANDARDS. WHERE DEVICE BOXES ARE LOCATED ON OPPOSITE SIDES OF FIRE OR SOUND RATED WALLS, MAINTAIN MINIMUM SPACING BETWEEN BOXES AS PER THE NEC.

5. ADAPTABILITY, COMMUNICATIONS: ALL DWELLING UNITS ARE "COMMUNICATIONS ADAPTABLE", WHICH IS DEFINED AS CAPABLE OF BEING MADE "COMMUNICATIONS ACCESSIBLE" IN THE FUTURE (SEE BELOW FOR "COMMUNICATIONS ACCESSIBLE* UNITS). COMMUNICATIONS ADAPTABLE UNITS INCLUDE ALLOCATED SPACES FOR FUTURE DOORBELL DEVICES (PUSH-BUTTONS, CHIMES, AND STROBES) AND FUTURE FIRE ALARM VISUAL ONLY STROBES (THESE DEVICES ARE NOT IN CONTRACT [N.I.C.]). PROVIDE SUITABLE PATHWAYS AND/OR WIRING TO EACH "ADAPTABLE"LOCATION TO FACILITATE FUTURE DEVICES AS PER THE FOLLOWING OPTIONS.

A. NOTE THAT OPTION "A" IS ONLY PERMITTED WHERE SPECIFICALLY ACCEPTABLE TO THE OWNER (OPTION "A" WILL BE REVIEWED ON AN INDIVIDUAL CASE-BY-CASE BASIS). OPTIONS "B" AND "C" MAY BE USED AT THE CONTRACTOR'S OPTION (EITHER OPTION "B" OR OPTION "C" MUST BE USED WHEREVER THE OWNER DOES NOT SPECIFICALLY ACCEPT OPTION "A').

B. WHERE BUILDING CONSTRUCTION READILY FACILITATES PULLING WIRING IN THE FUTURE (I.E. VIA ACCESSIBLE CEILING SPACES AND VIA FISHING HOLLOW WALL AND CEILING CAVITIES; PROVIDED CABLE CAN BE EASILY AND READILY PULLED INTO THE PATHWAYS ONCE CONSTRUCTED), ADDITIONAL WIRING PROVISIONS ARE NOT REQUIRED. THIS OPTION IS ONLY ACCEPTABLE WHERE THE ELECTRICAL CONTRACTOR DEMONSTRATES HOW WIRING CAN BE EASILY INSTALLED IN THE FUTURE AND WHERE THE OWNER ACCEPTS THE DEMONSTRATION.

C. PROVIDE A SUITABLE PATHWAY (IN THE FORM OF CONDUITS AND SLEEVES IN BUILDING CONSTRUCTION) TO ALLOW INSTALLING CABLES IN THE FUTURE. PROVIDE CONTINUOUS PULL WIRES THE LENGTH OF ALL PATHWAYS. INSTALL IN SUCH A WAY THAT CABLE CAN BE PULLED IN USING THE PULL WIRE ALONE, WITHOUT RESORTING TO ANY OTHER MODIFICATIONS TO BUILDING CONSTRUCTION (OTHER THAN CUTTING OPENINGS FOR DEVICE OUTLET BOXES.

INSTALL APPROPRIATE SPARE SYSTEMS CABLE IN CONSTRUCTION FROM THE COMMON CORRIDOR OUTSIDE OF THE DWELLING UNIT TO THE "ADAPTABLE" LOCATION AND COIL SUFFICIENT SLACK CABLE AT BOTH ENDS.

WHERE DWELLING UNITS INCLUDE AUDIBLE-ONLY FIRE ALARM SIGNALING DEVICES, PROVIDE WIRING (INCLUDING VISUAL DEVICE CONTROLLING WIRING) AT EACH AUDI@LE FIRE ALARM SIGNALING DEVICE LOCATION TO FACILITATE REPLACING EACH AUDIBLE-ONLY FIRE ALARM DEVICE WITH AN AUDIO/VISUAL FIRE ALARM SIGNALING DEVICE.

6. ACCESSIBILITY, COMMUNICATIONS: VERIFY AND COORDINATE (WITH THE ARCHITECT) ALL DWELLING UNITS REQUIRED TO BE EQUIPPED WITH ACCESSIBLE COMMUNICATIONS FEATURES ("COMMUNICATIONS ACCESSIBLE") IN COMPLIANCE WITH ANSI/ICC A117.7, THE AMERICANS WITH DISABILITIES ACT (ADA), AND ASSOCIATED ACCESSIBLE BUILDING CODES. ALL DWELLING UNITS SPECIFICALLY INDICATED ON ANY DRAWINGS (ARCHITECTURAL, ELECTRICAL, OR OTHERWISE) OR OTHERWISE DESIGNATED BY THE ARCHITECT FOR USE BY OCCUPANTS WITH VISUAL OR HEARING IMPAIRMENT SHALL BE CLASSIFIED AS "COMMUNICATIONS ACCESSIBLE". FOR ALL "COMMUNICATIONS ACCESSIBLE" UNITS, FURNISH AND INSTALL ALL DOORBELL DEVICES (PUSH-BUTTONS, CHIMES, AND STROBES) AND FIRE ALARM VISUAL ONLY STROBES AT THE RESPECTIVE "ADAPTABLE" (I.E. DASHED ON DRAWINGS) LOCATIONS SHOWN ON TYPICAL DWELLING UNIT PLANS.

FOR COMMUNICATIONS ACCESSIBLE DWELLING UNITS, PROVIDE AUDIO/VISUAL FIRE ALARM SIGNALING DEVICES AT EACH AUDIBLE FIRE ALARM SIGNALING DEVICE LOCATION SHOWN ON THE DRAWINGS.

7. ACCESSIBILITY, OPERABLE PARTS: WITH RESPECT TO OPERABLE PARTS, ALL DWELLING UNITS ARE CONSIDERED "OPERABLE PARTS ACCESSIBLE" UNITS. LOCATE EQUIPMENT AND DEVICES (LIGHTING CONTROLS, SWITCHES, RECEPTACLES, HVAC CONTROLS, INTERCOM CONTROLS, OTHER CONTROLS, ETC.) TO COMPLY WITH ACCESSIBLE MOUNTING HEIGHTS AND REACH RESTRICTIONS (SEE SPECIFICATIONS FOR ADDITIONAL INFORMATION).

FOR ALL RANGE HOODS INSTALLED IN DWELLING UNITS WHICH ARE DESIGNATED AS "ACCESSIBLE" OR WHERE ACCESSIBILITY OF OPERABLE ARTS IS OTHERWISE REQUIRED, PROVIDE A SEPARATE SWITCH LOCATED ABOVE THE COUNTER ADJACENT TO THE RANGE TO CONTROL THE RANGE HOOD.

8. ACCESSIBILITY, ARCHITECTURAL/MOBILITY: ELECTRICAL WORK ONLY INVOLVES ACCESSIBILITY OF COMMUNICATIONS FEATURES AND OPERABLE PARTS (WHICH ARE ADDRESSED ABOVE). ARCHITECTURAL ACCESSIBILITY AND ACCESSIBILITY ASSOCIATED WITH MOBILITY IMPAIRMENT DO NOT INVOLVE ELECTRICAL WORK. UNITS CLASSIFIED AS ACCESSIBLE FOR ARCHITECTURAL AND/OR MOBILITY PURPOSES DO NOT IMPACT ELECTRICAL WORK (ELECTRICAL WORK SPECIFIED IS CURRENTLY SUITABLE FOR SUCH CLASSIFICATION).

GENERAL NOTES

ISSUED DATE:XX/XX/XX

GOUVIS engineering consulting group, inc. ®
15 Studebaker
Irvine
CA 92618

Irvine
tel 949.752.1612
fax 949.752.5321

Palm Springs
tel 760.323.5090

REGISTERED PROFESSIONAL ENGINEER MEHDI HOSSEINZADEH E 22037 ELECTRICAL STATE OF CALIFORNIA

DATE SIGNED: 1/30/24

RESTRICTIVE NOTICE

THESE DESIGNS, DRAWINGS, AND SPECIFICATIONS ARE THE EXCLUSIVE PROPERTY OF GOUVIS ENGINEERING CONSULTING GROUP. THEY ARE THE SUBJECTOF COPYRIGHT AND OTHER LEGAL PROTECTION. THEY MAY BE USED ONLY BY THEIR INTENDED RECIPIENT AND ONLY FOR THE PROJECT DEPICTED HEREIN. NO PART OF THESE DRAWINGS ARE TO BE COPIED, TRANSFERRED, REPRODUCED, NOR CAN THEY BE USED, IN WHOLE OR IN PART, BY ANY OTHER PERSON OR FOR ANY OTHER PROJECT OR STRUCTURE, WITHOUT THE PRIOR EXPRESS WRITTEN CONSENT OF GOUVIS ENGINEERING CONSULTING GROUP

© 2017 GOUVIS ENGINEERING CONSULTING GROUP INC. - ALL RIGHTS RESERVED

PROJECT:
Tenant Square

DEVELOPER:
Osito Holdings LLC

ARCHITECT:
Gary Moore & Associates

LOCATION:
Morgan Hill
Santa Clara
CA

REVISIONS

NO.	DATE	DESCRIPTION
1	02/02/23	PLAN CHECK
2	11/01/23	PLAN CHECK
3	01/30/24	FIRE COMMENT

SHEET NAME:
GENERAL NOTES

PROJECT NUMBER:
66074

ENGINEER:

DRAFTER:

SHEET NUMBER:
E-0.1

LIGHTING

- LIGHT (SURFACE MOUNT)
- LIGHT (SURFACE MOUNT) WITH 90 MINUTES BATTERY PACK
- LIGHT (RECESS MOUNT)
- LIGHT (RECESS MOUNT) WITH 90 MINUTES BATTERY PACK
- LIGHT (WALL MOUNT)
- PENDANT LED LIGHT
- UNDER CABINET LINEAR LIGHT FIXTURE
- 1' X 4' LIGHT
- 1' X 4' LIGHT WITH 90 MINUTES BATTERY PACK
- TRACK LIGHT
- EMERGENCY LIGHT(BUG EYE)
- EXIT SIGN (CEILING MOUNTED)
- EXIT SIGN (WALL MOUNTED)

SITE LIGHTING

- POLE LIGHT
- POST LIGHT
- BOLLARD LIGHT
- UPLIGHT LIGHT
- TREE LIGHT

NOTE: VERIFY ALL LIGHT FIXTURES WITH OWNER/ ARCHITECT PRIOR TO BID. LIGHTS AND PANEL SHALL NOT BE RECESSED IN FIRE RATED ASSEMBLIES UNLESS BOXED WITH EQUIVALENT CONSTRUCTION.

SWITCH

- $ab — SINGLE POLE, ab = CONTROL ZONES a & b
- $3ab — 3-WAY
- $4ab — 4-WAY
- DIMMER SWITCH
- OCCUPANCY SENSOR(WALL)
- VACANCY SENSOR(WALL)
- PUSH-BUTTON SWITCH
- DOOR BELL CHIME
- TELEPHONE OUTLET
- DATA OUTLET
- COMBINATION TELEPHONE AND DATA OUTLET BOX WALL
- TELEVISION OUTLET
- DAY LIGHT SENSOR(CEILING)
- OCCUPANCY SENSOR(CEILING)
- PP — POWER PACK

NOTE: LIGHT SWITCHES AND CONTROLS, WALL MOUNTED AT +48" AFF (MAX)
ALL WALL SWITCHES CONTROLLING EMERGENCY CIRCUITS SHALL BE ENGRAVED WITH "EMERGENCY" ON RED FACE PLATE

OUTLETS

- DUPLEX RECEPTACLE
- DUPLEX RECEPTACLE, CONTROLLED
- QUAD RECEPTACLE
- SPECIAL RECEPTACLE
- DUPLEX USB
- GFCI DUPLEX RECEPTACLE
- GFCI DUPLEX RECEPTACLE WITH WEATHERPROOF COVER
- DUPLEX RECEPTACLE, BOTTOM HALF SWITCHED
- DUPLEX CEILING RECEPTACLE
- DUPLEX FLOOR RECEPTACLE
- QUAD FLOOR RECEPTACLE
- DUPLEX ABOVE COUNTER
- GFCI DUPLEX ABOVE COUNTER
- CONTROLLER ABOVE COUNTER
- DUPLEX W/USB (TYP. ABOVE COUNTER)
- CONTROLLER W/USB (TYP. ABOVE COUNTER)

NOTE: ALL WALL MOUNTED RECEPTACLE SHALL BE +18" AFF U.O.N.
ALL WALL COUNTER MOUNTED RECEPTACLE SHALL BE GFCI AND 6" ABOVE SPLASH. COORDINATE WITH ARCHITECTURAL DRAWINGS.

MECHANICAL

- F — FUSED DISCONNECT SWITCH
- NON-FUSED DISCONNECT SWITCH
- $T — THERMALLY RATED 2P MOTOR SWITCH
- $M — MANUAL MOTOR RATED SWITCH
- CU X — CONDENSING UNIT (CU) OR HP X — HEAT PUMP (HP)
- FAU X — FORCED AIR UNIT (FAU) OR FC X — FAN COIL UNIT (FC)
- EF X — EXHAUST FAN (EF)
- SDD SDD X — SMOKE DUCT DETECTOR (SDD)

NOTE: ALL A.I.C. RATINGS OF ELECTRICAL DISTRIBUTION EQUIPMENT SHALL BE VERIFIED WITH LOCAL UTILITY COMPANY HAVING JURISDICTION PRIOR TO BID.

MISC

- SD — SMOKE DETECTOR HARDWIRED W/ BATTERY BACKUP
- SD CO — SMOKE DETECTOR AND CARBON MONOXIDE COMBO HARDWIRED W/ BATTERY BACKUP
- 1 — KEYED NOTE SYMBOL
- LIGHT MARK
- P1 — PANEL
- J — JUNCTION BOX (WALL MOUNTED)
- J — J-BOX (CEILING MOUNTED)

NOTE: ALL A.I.C.RATINGS OF ELECTRICAL DISTRIBUTION EQUIPMENT SHALL BE VERIFIED WITH LOCAL UTILITY COMPANY HAVING JURISDICTION PRIOR TO BID.

SINGLE LINE DIAGRAM

	CIRCUIT BREAKER
	DRAWOUT CIRCUIT BREAKER
	FUSED SWITCH
	TRANSFORMER
	AUTOMATIC TRANSFER SWITCH
G	GENERATOR
PANEL	PANELBOARD
M	METER
	MOTOR OR EQUIPMENT AS NOTED
	UNDERGROUND PULL SECTION LANDING LUGS
ST	SHUNT TRIP
LSIG	ELECTRONIC TRIP UNIT: L - LONG-TIME TRIP S - SHORT-TIME TRIP I - INSTANTANEOUS TRIP G - GROUND-FAULT TRIP, GROUND FAULT SENSING INTEGRAL WITH CIRCUIT BREAKER.
	FUSE CUTOUT
	DRY TYPE TRANSFORMER
	WYE CONFIGURATION
	DELTA CONFIGURATION
	GROUND
M kW	UTILITY COMPANY METER. PROVIDE CT'S & PT'S AS REQUIRED. REFER TO SINGLE LINE DIAGRAM.
	CURRENT TRANFORMERS
	DISCONNECT SWITCH FURNISHED W/ EQUIPMENT
O	START-STOP CONTROL STATION
H O A	HAND-OFF AUTO CONTROL STATION
GF	GROUND FAULT RELAY
GFP	GROUND FAULT PROTECTION

LOW VOLTAGE KEYED NOTES

- TV (CATV). PROVIDE OUTLET (1) RG6. RUN CABLE TO THE CATV BOX. VERIFY WITH TV SERVICE PROVIDER AND IT CONSULTANT BEFORE ROUGH-IN.
- COMBINATION PHONE AND DATA. PROVIDE (1) CAT 6 CABLE PHONE AND (1) CAT6 CABLE FOR DATA BACK TO STRUCTURED MEDIA ENCLOSURE. PROVIDE 2-PORT COVER PLATE MOUNTED WITHIN 2-FEET OF 120V RECEPTACLE.
- PHONE. PROVIDE (1) CAT 6 CABLE PHONE BACK TO STRUCTURED MEDIA ENCLOSURE. PROVIDE 1-PORT COVER PLATE MOUNTED +42" AFF.
- DATA. PROVIDE (1) CAT 6 CABLE BACK TO STRUCTURED MEDIA ENCLOSURE. PROVIDE 1-PORT COVER PLATE MOUNTED 2-FEET OF 120V RECEPTACLE.
- STRUCTURED MEDIA ENCLOSURE. COORDINATE WITH LOW VOLTAGE CONTRACTOR. PROVIDE DUPLEX RECEPTACLE OUTLET INSIDE ENCLOSURE, SURGE PROTECTED 15 AMP I.E. LEGRAND 5362WSP OR LEVITON 47605-ACS. IN-BOUND SERVICES SHALL TERMINATE IN THIS ENCLOSURE AND INDIVIDUAL CONNECTIONS SHALL BE PROVIDED TO TELEVISION, DATA AND TELEPHONE DEVICES. PROVIDE CONDUIT RUN FROM THE STRUCTURED ENCLOSURE TO THE TELEPHONE AND CABLE COMPANY "POC".

SYMBOLS LIST

ABS	ABOVE BACKSPLASH	IG	ISOLATED GROUND	T	TRANSFORMER
ADA	AMERICAN WITH DISABILITY ACT	IN OR "	INCHES	TC	TIME CLOCK
AFF	ABOVE FINISHED FLOOR	INCAD	INCANDESCENT	TELC	TELEPHONE CABINET
AFG	ABOVE FINISHED GROUND			TEL	TELEPHONE
AFCI	ARC FAULT CIRCUIT INTERRUPTER	JB/JBOX	JUNCTION BOX	TELCOM	TELECOMMUNICATIONS
AIC	AMPERE INTERRUPTING CAPACITY			TELE/DATA	TELEPHONE & DATA
AF/AT	AMP FRAME, AMP TRIP	K	DEGREE KELVIN	TV	TELEVISION
ANN	FIRE ALARM ANNUNCIATOR PANEL	KVA	KILOVOLT AMPERES	TP	TAMPER PROOF
AS/AF	AMP SWITCH, AMP FUSE	KW	KILOWATT	TYP	TYPICAL
AMP, A	AMPERE	KCMIL	THOUSAND CIRCULAR MILS	TSP	TWISTED SHIELDED PAIR
ARCH	ARCHITECTURAL				
ASYM	ASYMMETRICAL	LC	LIGHTING CONTACTOR	UBP	UTILITY BRANCH PANEL
ATS	AUTOMATIC TRANSFER SWITCH	LCL	LINE CONTINUOUS LOAD	UG	UNDERGROUND
AV	AUDIO VISUAL	LCP	LIGHTING CONTROL PANEL	UGPS	UNDERGROUND PULL SECTION
AWG	AMERICAN WIRE GAUGE	LF	LINEAR FEET	UON	UNLESS OTHERWISE NOTED
		LPS	LOW PRESSURE SODIUM	UPS	UNINTERRUPTIBLE POWER SUPPLY
BATT	BATTERY	LT	LIGHTING TRANSFORMER	UT	UTILITY POWER TRANSFORMER
BC	BARE COPPER	LTG/LTS	LIGHTING	UTP	UNSHIELDED TWISTED PAIR
BCG	BARE COPPER GROUND	LSI	LONG TIME, SHORT TIME, INSTANTANOUS		
BKR	BREAKER	LSIG	LONG TIME, SHORT TIME, INSTANTANOUS, GROUND	V	VOLTS
BLDG	BUILDING			VA	VOLTS AMPETERS
BOT	BOTTOM OF TRAY	M	METER	VD	VOLTAGE DROP
		MAX	MAXIMUM	VFD	VARIABLE FREQUENCY DRIVE
C	CONDUIT	MCA	MINIMUM CIRCUIT AMPACITY		
°C	CELSIUS	MCB	MAIN CIRCUIT BREAKER	W	WIRE
CAB	CABINET	MCC	MOTOR CONTROL CENTER	WP	WEATHERPROOF
CB	CIRCUIT BREAKER	MFR	MANUFACTURER		
CKT	CIRCUIT	MH	MOUNTING HEIGHT	XFMR	TRANSFORMER
CLCB	CURRENT LIMITING CIRCUIT BREAKER	MH	METAL HALIDE	XFR	TRANSFER
CLF	CURRENT LIMITING FUSE	MLO	MAIN LUGS ONLY		
CLG	CEILING	MOCP	MAXIMUM OVERCURRENT PROTECTION	Y	WYE CONNECTION
CM/GC	CONSTRUCTION MANAGER/GENERAL CONTRACTOR	MTD	MOUNTED		
C.O.	CONDUIT ONLY, COMPLETE WITH PULL WIRE	MS	MAIN SWITCHBOARD		
COMM	COMMUNICATIONS	MV	MERCURY VAPOR		
CONN	CONNECTED	MW	MICROWAVE		
CONST	CONSTRUCTION				
CONT	CONTINUATION	N	NEUTRAL		
CPT	CONTROL POWER TRANSFORMER	NC	NORMALLY CLOSED		
CT	CURRENT TRANSFORMER	NEC	NATIONAL ELECTRICAL CODE		
CPT	CLEAN POWER TRANFORMER	NF	NON-FUSED		
		NIC	NOT IN CONTRACT		
Δ	DELTA CONNECTED	NL	NIGHT LIGHT		
DB	DISTRIBUTION BOARD	NO	NORMALLY OPEN		
DIA	DIAMETER	NO. OR #	NUMBER		
DISC SW	DISCONNECT SWITCH				
DIST	DISTRIBUTION	OFCI	OWNER FURNISHED, CONTRACTOR INSTALLED		
DEG	DEGREE				
DP	DISTRIBUTION PANELBOARD	P	POLE		
DT	DIRTY POWER TRANFORMER	PA	PUBLIC ADDRESS		
DWG	DRAWING	PB	PULL BOX		
DW	DISH WASHER	PC	PHOTOCELL		
		PH OR ϕ	PHASE		
EF	EXHAUST FAN	PL	POLE		
EG	EQUIPMENT GROUND	PR	PAIR		
(E)	EXISTING	PRI	PRIMARY		
EL	ELEVATION	PRIMARY	OVER 600 VOLTS		
ELEC	ELECTRICAL	PROVIDE	FURNISH, INSTALL, AND CONNECT		
ELEV	ELEVATOR	PT	POTENTIAL TRANSFORMER		
EMER	EMERGENCY	PWR	POWER		
EMS	ENERGY MANAGEMENT SYSTEM				
EMT	ELECTRICAL METALLIC TUBING	QTY	QUANTITY		
ENT	ELECTRICAL NON-METALLIC TUBING				
E.O.L.	END-OF-LINE CIRCUIT TERMINATOR	RECPT, REC	RECEPTACLE		
EP	EXPLOSION PROOF	REF	REFRIGERATOR		
EQPT	EQUIPMENT	REQD	REQUIRED		
EWC	ELECTRIC WATER COOLER	RGS	RIGID GALVANIZED STEEL		
EXIST	EXISTING	RM	ROOM		
		RP	REC BUILDING PANEL		
FA	FIRE ALARM	ROIC	RESIDENT OFFICER IN CHARGE OF CONSTRUCTION		
FACP	FIRE ALARM CONTROL PANEL				
FATC	FIRE ALARM TERMINATION CABINET	SBG	STANDBY GENERATOR		
FDR	FEEDER	SDPB	STANDBY DISTRIBUTION PANELBOARD		
FIXT	FIXTURE	SEC	SECURITY		
FLA	FULL LOAD AMPS	SECONDARY	600 VOLTS AND LESS		
FLR	FLOOR	SECT	SECTION		
FLOUR	FLUORESCENT	SF/SQFT	SQUARE FOOT		
FT OR '	FEET	SN	SOLID NEUTRAL		
FP	FIRE PUMP	SPEC	SPECIFICATION		
		SP	SUMP PUMP		
GI/GND	GROUND	SQ	SQUARE		
GEF	GARAGE EXHAUST FAN	SSG	SECONDARY SWITCHGEAR		
GFCI	GROUND FAULT CIRCUIT INTERRUPTER	ST	SHUNT TRIP		
GFP	GROUND FAULT PROTECTION	SURF	SURFACE		
		SW	SWITCH		
H	HOT (UNSWITCHED)	SYM	SYMMETRICAL		
HID	HIGH INTENSITY DISCHARGE	SYS	SYSTEMS		
HOA	HAND-OFF AUTO				
HP	HORSE POWER				
HPS	HIGH PRESSURE SODIUM				
HTR	HEATER				
HVAC	HEATING, VENTILATION, & AIR CONDITIONING				
H.W.D.L.	HEIGHT, WIDTH, DEPTH, LENGTH				

ABBREVIATIONS

ISSUED DATE:XX/XX/XX

GOUVIS engineering consulting group, inc.®
15 Studebaker
Irvine
CA 92618

Irvine
tel 949.752.1612
fax 949.752.5321

Palm Springs
tel 760.323.5090

REGISTERED PROFESSIONAL ENGINEER
BEHZAD HOSSEINZADEGAN
E 22037
ELECTRICAL
STATE OF CALIFORNIA

DATE SIGNED: 1/30/24

RESTRICTIVE NOTICE

THESE DESIGNS, DRAWINGS, AND SPECIFICATIONS ARE THE EXCLUSIVE PROPERTY OF GOUVIS ENGINEERING CONSULTING GROUP. THEY ARE THE SUBJECTOF COPYRIGHT AND OTHER LEGAL PROTECTION. THEY MAY BE USED ONLY BY THEIR INTENDED RECIPIENT AND ONLY FOR THE PROJECT DEPICTED HEREIN. NO PART OF THESE DRAWINGS ARE TO BE COPIED, TRANSFERRED, REPRODUCED, NOR CAN THEY BE USED, IN WHOLE OR IN PART, BY ANY OTHER PERSON OR FOR ANY OTHER PROJECT OR STRUCTURE, WITHOUT THE PRIOR EXPRESS WRITTEN CONSENT OF GOUVIS ENGINEERING CONSULTING GROUP

© 2017 GOUVIS ENGINEERING CONSULTING GROUP INC. - ALL RIGHTS RESERVED

PROJECT:
Tenant Square

DEVELOPER:
Osito Holdings LLC

ARCHITECT:
Gary Moore & Associates

LOCATION:
Morgan Hill
Santa Clara
CA

REVISIONS

NO.	DATE	DESCRIPTION
1	02/02/23	PLAN CHECK
2	11/01/23	PLAN CHECK
3	01/30/24	FIRE COMMENT

SHEET NAME:
ABBREVIATIONS & SYMBOLS LIST

PROJECT NUMBER:
66074

ENGINEER:

DRAFTER:

SHEET NUMBER:
E-0.2

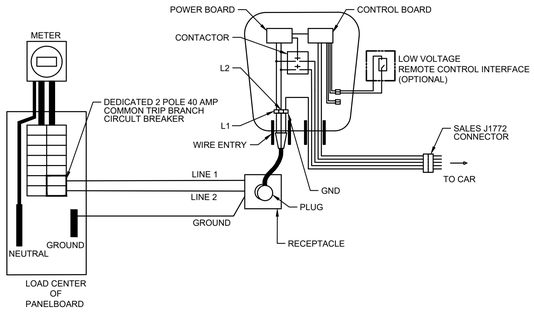

**INDICATE VARIANT DEVICES WITHIN THE SAME PRODUCT FAMILY

SYSTEM SCHEMATIC CORD-AND-PLUG INSTALLATION 6

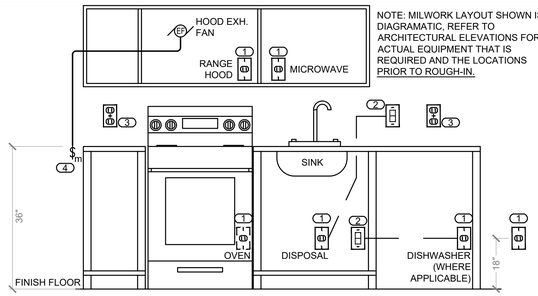

NOTE: MILWORK LAYOUT SHOWN IS DIAGRAMATIC, REFER TO ARCHITECTURAL ELEVATIONS FOR ACTUAL EQUIPMENT THAT IS REQUIRED AND THE LOCATIONS PRIOR TO ROUGH-IN.

KEYED NOTES:

1. DEDICATED SIMPLEX RECEPTACLE MOUNTED IN CASEWORK FOR LOAD INDICATED RELATIVE LOCATIONS ARE DIAGRAMATIC, REFER TO ARCHITECTURAL PLANS FOR ACTUAL LOCATIONS.
2. DISCONNECT SWITCH FOR SIMPLEX RECEPTACLE SERVING DISPOSALS AND DISHWASHER, LABEL SWITCHES: "DISPOSAL" AND "DISHWASHER DISCONNECT".
3. GFCI/AFCI RECEPTACLE ON EACH COUNTER AND ON EITHER SIDE OF SINK. PROVIDE A MINIMUM OF TWO DEDICATED COUNTERTOP RECEPTACLES, CIRCUIT ALL OTHER COUNTERTOP RECEPTACLES TOGETHER ON A COMMON CIRCUIT.
4. SWITCH FOR CONTROLLING RANGE HOOD FAN, PER TITLE 24

TYPICAL ELECTRICAL DEVICE HEIGHT 2

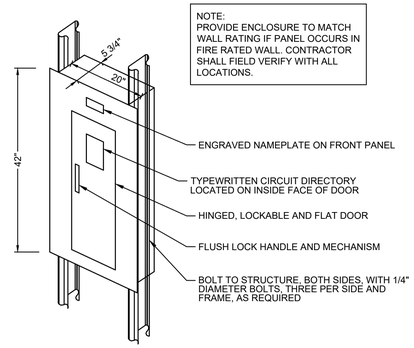

NOTE:
PROVIDE ENCLOSURE TO MATCH WALL RATING IF PANEL OCCURS IN FIRE RATED WALL. CONTRACTOR SHALL FIELD VERIFY WITH ALL LOCATIONS.

- ENGRAVED NAMEPLATE ON FRONT PANEL
- TYPEWRITTEN CIRCUIT DIRECTORY LOCATED ON INSIDE FACE OF DOOR
- HINGED, LOCKABLE AND FLAT DOOR
- FLUSH LOCK HANDLE AND MECHANISM
- BOLT TO STRUCTURE, BOTH SIDES, WITH 1/4" DIAMETER BOLTS, THREE PER SIDE AND FRAME, AS REQUIRED

RECESSED MOUNTED PANEL 4

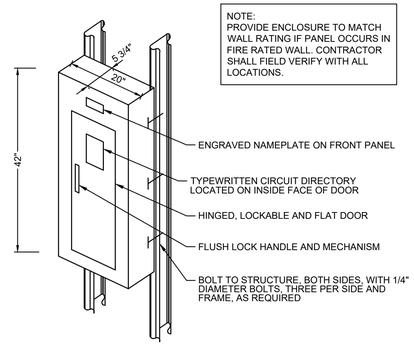

NOTE:
PROVIDE ENCLOSURE TO MATCH WALL RATING IF PANEL OCCURS IN FIRE RATED WALL. CONTRACTOR SHALL FIELD VERIFY WITH ALL LOCATIONS.

- ENGRAVED NAMEPLATE ON FRONT PANEL
- TYPEWRITTEN CIRCUIT DIRECTORY LOCATED ON INSIDE FACE OF DOOR
- HINGED, LOCKABLE AND FLAT DOOR
- FLUSH LOCK HANDLE AND MECHANISM
- BOLT TO STRUCTURE, BOTH SIDES, WITH 1/4" DIAMETER BOLTS, THREE PER SIDE AND FRAME, AS REQUIRED

SURFACE MOUNTED PANEL 3

NOTES:

1. THE ELECTRICAL CONTRACTOR SHALL VERIFY THE EXACT LOCATION OF ALL TELEVISION OUTLETS WITH THE ARCHITECT PRIOR TO INSTALLATION.
2. ALL DEVICES SHOWN ON THIS DETAIL ARE FOR REFERENCES OF MOUNTING HEIGHTS ONLY. THE ELECTRICAL CONTRACTOR SHALL FIELD ADJUST THE HEIGHTS OF THE DEVICES AS REQUIRED FOR PROPER MOUNTING OF THE DEVICES.
3. ALL DEVICES REQUIRED FOR THIS PROJECT MAY NOT APPEAR ON THIS DETAIL. ALL ITEMS SHOWN ON THIS DETAIL MAY NOT B REQUIRED OF THIS PROJECT.
4. FIRE ALARM HORN/STROBES ARE TO BE MOUNTED NO HIGHER THAN 96" AND NO LOWER THAN 80" ON CENTER.

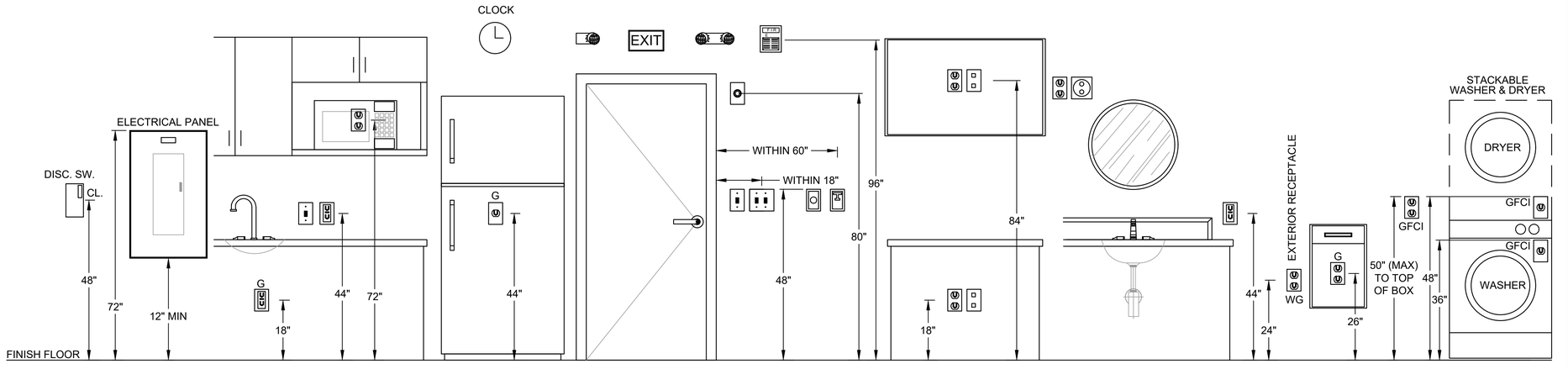

TYPICAL ELECTRICAL DEVICE HEIGHT 2

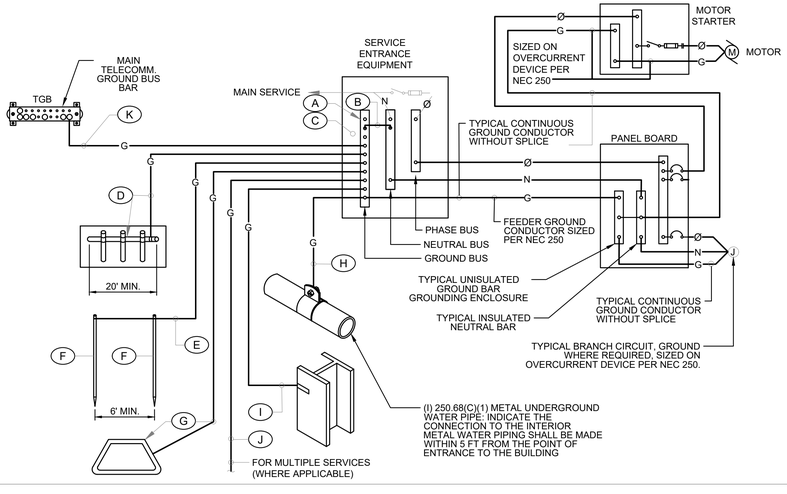

GROUNDING SCHEDULE

CODE REFERENCE / AMPACITY		A FACTORY INSTALLED GROUND BUS BAR	B INTEGRATED BUS BAR MAIN BOND JUMPER	C INTEGRATED BUS BAR CASE BOND JUMPER	D CONCRETE ENCASED ELECTRODE (UFER)	E GROUDING ELECTRODE CONDUCTOR TO ROD, PIPE OR PLATE	F CU or CU-CLAD STEEL GROUND ROD	G COPPER GROUND RING CONDUCTOR	H METALLIC PIPING BONDING CONDUCTOR	I BUILDING STEEL BONDING CONDUCTOR	J MULTIPLE SERVICE BONDING CONDUCTOR	K TELEPHONE SYSTEM BONDING CONDUCTOR
		N.E.C 250.102	N.E.C 250.102	N.E.C 250.50(c) 250.66(b)	N.E.C Table 250.66	N.E.C 250.52(A)(5)	N.E.C 250.50(d) 250.66(c)	N.E.C 250.50(a) 250.66	N.E.C 250.50(b) 250.66	N.E.C 250.66		
200 AMP AND LESS	SHALL BE SIZED TO ACCOMMODATE ALL GROUND WIRE LUGS AS INDICATED ON GROUNDING SCHEDULE AND AS REQUIRED ELSEWHERE ON PLANS OR SPECIFICATIONS	#4	#4	#4	#4	3/4" x 10'	#2	#4	#4	#4	#6
225 AMP		#2	#2	#4	#2	3/4" x 10'	#2	#2	#2	#2	#6
400 AMP		#1/0	#1/0	#4	#1/0	3/4" x 10'	#1/0	#1/0	#1/0	#1/0	#6
600 AMP		#2/0	#2/0	#4	#3/0	3/4" x 10'	#2/0	#2/0	#2/0	#2/0	#6
800 AMP		#3/0	#3/0	#4	#3/0	3/4" x 10'	#3/0	#3/0	#3/0	#3/0	#6
1000 AMP		#3/0	#3/0	#4	#3/0	3/4" x 10'	#3/0	#3/0	#3/0	#3/0	#6
1200 AMP		250kcMIL	250kcMIL	#4	#3/0	3/4" x 10'	#3/0	#3/0	#3/0	#3/0	#6
1600 AMP		350kcMIL	350kcMIL	#4	#3/0	3/4" x 10'	#3/0	#3/0	#3/0	#3/0	#6
2000 AMP		400kcMIL	400kcMIL	#4	#3/0	3/4" x 10'	#3/0	#3/0	#3/0	#3/0	#6
2500 AMP		500kcMIL	500kcMIL	#4	#3/0	3/4" x 10'	#3/0	#3/0	#3/0	#3/0	#6
3000 AMP		500kcMIL	500kcMIL	#4	#3/0	3/4" x 10'	#3/0	#3/0	#3/0	#3/0	#6

GROUNDING SYSTEM GENERAL NOTES

1. THE GROUNDING ELECTRODE SYSTEM SHALL CONSIST OF ITEMS A, B, C, D, E, F AND G WHERE APPLICABLE.
2. ITEMS H, AND J MUST BE BONDED TOGETHER AND TO THE GROUNDING ELECTRODE SYSTEM WHEN THEY ARE PRESENT.
3. ITEM D CONCRETE ENCASED ELECTRODE (UFER) SHALL HAVE UFER SUPPORT CONSISTING OF 5/8 "x 10 'COPPER GROUND ROD CUT INT02 SECTIONS AND DRIVEN FOR SUPPORT OF UFER CONDUCTOR ONLY COPPER TO COPPER CONNECTIONS ARE ACCEPTABLE. DO NOT USE RE - BAR FOR UFER SUPPORT (THIS IS TO AVOID THE HARMFUL EFFECTS OF DISSIMILAR METALS IN CONTACT.) A UL.LISTED COPPER TO RE - BAR CLAMP (SUCH AS GRAVES JONES BOND "SYSTEM) IS AN APPROVED ALTERNATIVE.
4. THIS DETAIL IS PROVIDE IN ACCORDANCE WITH THE NATIONAL ELECTRICAL CODE, ARTICLE 250, PERTAINING TO THE "GROUNDING ELECTRODE SYSTEM".
5. ALL SPLICING SHALL BE ACCOMPLISHED VIA EXOTHERMIC WELD (CAD - WELD) ONLY.
6. ALL CONDUCTOR SIZING INDICATED ON THE GROUNDING SCHEDULE ARE FOR COPPER CONDUCTORS, ALUMINUM IS NOT PERMITTED
7. ANY VARIANCES FROM THIS DIAGRAM AND ASSOCIATED SCHEDULE AND NOTES MUST BE REQUESTED AND APPROVED IN WRITING PRIOR TO INSTALLATION.
8. ALL INSTALLATIONS SHALL COMPLY WITH THE LATEST ADOPTED EDITION OF N.E.C. ARTICLE 250 (ALL SUBPARAGRAPHS) AND ALL STATE AND LOCAL REQUIREMENTS.
9. THE GROUNDING SYSTEM SHALL PROVIDE LESS COAL (4) FOUR OHMS RESISTANCE TO GROUND AT THE SERVICE CONNECTION. THE RESULTS SHALL BE VERIFIED BY AN INDEPENDENT TESTING AGENCY VIA GROUND TEXT (FALL OF POTENTIAL) AND SUBMITTED TO. ELECTRICAL ENGINEER UPON COMPLETION OF PROJECT

TYPICAL SYSTEM GROUNDING AND BONDING 1

ISSUED DATE:XX/XX/XX

GOUVIS engineering consulting group, inc.®
15 Studebaker
Irvine
CA 92618

Irvine
tel 949.752.1612
fax 949.752.5321

Palm Springs
tel 760.323.5090

REGISTERED PROFESSIONAL ENGINEER
BEIGU HOSSEINZADEH
E 22037
ELECTRICAL
STATE OF CALIFORNIA

DATE SIGNED: 1/30/24

RESTRICTIVE NOTICE

THESE DESIGNS, DRAWINGS, AND SPECIFICATIONS ARE THE EXCLUSIVE PROPERTY OF GOUVIS ENGINEERING CONSULTING GROUP. THEY ARE THE SUBJECTOF COPYRIGHT AND OTHER LEGAL PROTECTION. THEY MAY BE USED ONLY BY THEIR INTENDED RECIPIENT AND ONLY FOR THE PROJECT DEPICTED HEREIN. NO PART OF THESE DRAWINGS ARE TO BE COPIED, TRANSFERRED, REPRODUCED, NOR CAN THEY BE USED, IN WHOLE OR IN PART, BY ANY OTHER PERSON OR FOR ANY OTHER PROJECT OR STRUCTURE, WITHOUT THE PRIOR EXPRESS WRITTEN CONSENT OF GOUVIS ENGINEERING CONSULTING GROUP

© 2017 GOUVIS ENGINEERING CONSULTING GROUP INC. - ALL RIGHTS RESERVED

PROJECT:
Tenant Square

DEVELOPER:
Osito Holdings LLC

ARCHITECT:
Gary Moore & Associates

LOCATION:
Morgan Hill
Santa Clara
CA

REVISIONS

NO.	DATE	DESCRIPTION
1	02/02/23	PLAN CHECK
2	11/01/23	PLAN CHECK
3	01/30/24	FIRE COMMENT

SHEET NAME:
DETAILS

PROJECT NUMBER:
66074

ENGINEER:

DRAFTER:

SHEET NUMBER:
E-0.3

SYSTEM No. W-L-3065

F RATING - 1 AND 2 HR (SEE ITEM 1)
T RATING - 0 HR

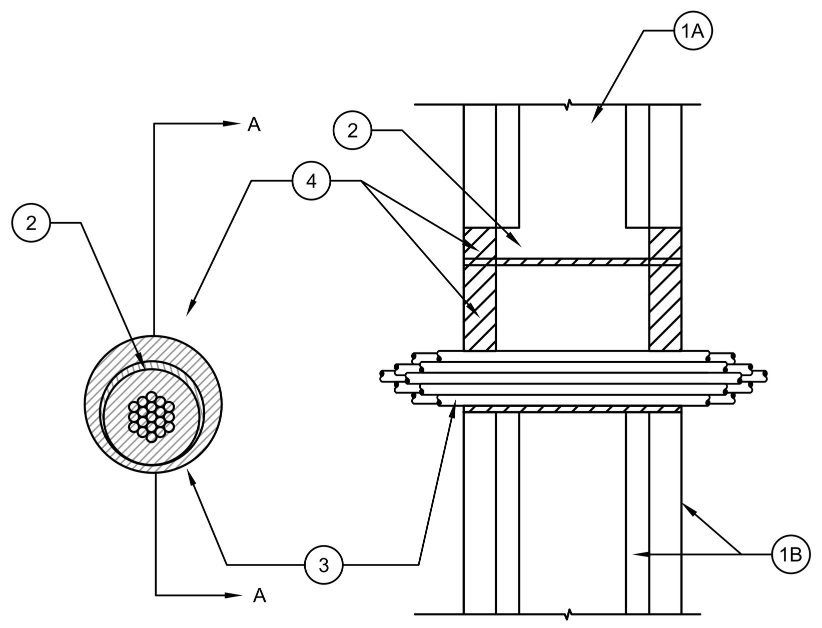

SECTION A-A

1. WALL ASSEMBLY - THE 1 AND 2 HR FIRE RATED GYPSUM WALLBOARD/STUD WALL ASSEMBLY SHALL BE CONSTRUCTED OF THE MATERIALS AND IN THE MANNER SPECIFIED IN THE INDIVIDUAL U300, U400 OR V600 SERIES WALL AND PARTITION DESIGNS IN THE UL FIRE RESISTANCE DIRECTORY AND SHALL INCLUDE THE FOLLOWING CONSTRUCTION FEATURES:

   A STUDS - WALL FRAMING MAY CONSIST OF EITHER WOOD STUDS OR STEEL STUDS CHANNEL STUDS. WOOD STUDS TO CONSIST OF NOM 2 BY 4 IN. LUMBER SPACED 16 IN. OC. STEEL STUDS TO BE MIN 2-1. WIDE AND SPACED MAX 24" OC.

   B GYPSUM BOARD - NOM 5/8 IN. THICK GYPSUM BOARD, WITH SQUARE OR TAPERED EDGES. THE GYPSUM BOARD TYPE, THICKNESS, NUMBER OF LAYERS, FASTENER TYPE AND SHEET ORIENTATION SHALL BE AS SPECIFIED IN THE INDMDUAL U300, U400 OR V600 SERIES DESIGN IN THE UL FIRE RESISTANCE DIRECTORY. MAX DIAMETER OF OPENING IS 5-1/2 IN. WHEN SLEEVE (ITEM 2) IS iEMPLOYED. MAX DIAMETER OF OPENING IS 4 IN. WHEN SLEEVE (ITEM 2) IS NOT EMPLOYED.

   THE F RATING OF THE FIRESTOP SYSTEM IS EQUAL TO THE FIRE RATING OF THE WALL ASSEMBLY.

2. METALLIC SLEEVE (OPTIONAL) - NOM 4 IN. DIAMETER (OR SMALLER) STEEL ELECTRICAL METALLIC TUBING (EMT) OR SCHEDULE 5 (OR HEAVIER) STEEL PIPE OR MIN 0.016 IN. THICK (28 GAL) GALV STEEL SLEEVE INSTALLED FLUSH WITH WALL SURFACES. THE ANNULAR SPACE BETWEEN STEEL SLEEVE AND PERIPHERY OF OPENING SHALL BE MIN O IN. (POINT CONTACT) TO MAX 1 IN. WHEN SCHEDULE 5 STEEL PIPE OR EMT IS USED, SLEEVE MAY EXTEND UP TO 8 IN. BEYOND THE WALL SURFACES.

3. CABLES- PERCENT OF THE CROSS-SECTIONAL AREA OF THE OPENING. THE ANNULAR SPACE BETWEEN THE CABLE BUNDLE AND THE PERIPHERY OF THE OPENING TO BE MIN O IN. TO MAX 1 IN. CABLES TO BE RIGIDLY SUPPORTED ON BOTH SIDES OF THE WALL ASSEMBLE. ANY COMBINATION OF THE FOLLOWING TYPES OF SIZES OF COPPER CONDUCTOR CABLES MAY BE USED:

   A MAX 7/C No. 12 AWG WITH POLYVINYL CHLORIDE (PVC) INSULATION AND JACKET.

   B MAX 25 PAIR No. 24 AWG TELEPHONE CABLE WITH PVC INSULATION AND JACKET

   C TYPE RG/U COAXIAL CABLE WITH POLYETHYLENE (PE) INSULATION AND PVC JACKET HAVING A MAX OUTSIDE DIAMETER OF 1/2 IN.

   D MULTIPLE FIBER OPTICAL COMMUNICATION CABLE JACKETED WITH PVC AND HAVING A MAX OD OF 5/8 IN.

   E THROUGH PENETRATING PRODUCTS- MAX THREE COPPER CONDUCTOR No. 8 AWG. METAL-CLAD CABLE.
   AFC CABLE SYSTEMS INC

   F MAX 3/C (WITH GROUND) (OR SMALLER) No. 8 AWG COPPER CONDUCTOR CABLE WITH PVC INSULATION AND JACKETING.

4. FILL VOID OR CAVITY MATERIAL* - SEALANT - FILL MATERIAL APPLIED WITHIN THE ANNULUS, FLUSH WITH EACH END OF THE STEEL SLEEVE OR WALL SURFACE. FILL MATERIAL INSTALLED SYMMETRICALLY ON BOTH SIDES OF THE WALL A MIN 5/8 IN. THICKNESS OF SEALANT IS REQUIRED FOR THE 1 OR 2 HR F RATING. AND ADDITIONAL 1/2 IN. DIAMETER BEAD OF FILL MATERIAL SHALL BE APPLIED AROUND THE PERIMETER OF SLEEVE ON BOTH SIDES OF THE WALL WHEN SLEEVE EXTENDS BEYOND SURFACE OF WALL.

   HILTI CONSTRUCTION CHEMICALS, DIV OF HILTI INC - CP601S, CP606 OR FS-ONE SEALANT.

   * BEARING THE UL CLASSIFICATION MARK

CONDUIT FIRESTOP PENETRATION FOR 1 HR AND 2 HR STUD WALL | 5

UL SYSTEM No. C-AJ-1044
FOR BLOCK WALLS

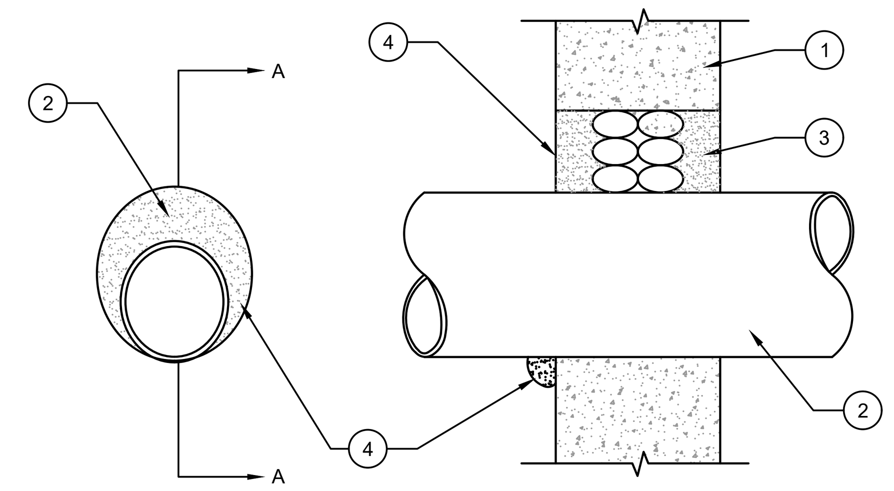

SECTION A-A NTS

1. FLOOR OR WALL ASSEMBLY - LIGHTWEIGHT OR NORMAL WEIGHT (100-150 PCF OR 1600-2400 KG/M3) CONCRETE. EXCEPT AS NOTED IN TABLE UNDER (TEM 4, MIN THICKNESS OF SOLID CONCRETE WALL ASSEMBLY 1S 4-1/2 IN. (114 MM). WALL ASSEMBLY WAY ALSO BE CONSTRUCTED OF ANY UL CLASSIFIED CONCRETE BLOCKS.

   1A STEEL SLEEVE- NOM 16 IN. (406 MM) DIAM (OR SMALLER) SCHEDULE 10 (OR HEAVIER) STEEL SLEEVE CAST OR GROUTED INTO WALL ASSEMBLY. SLEEVE MAY EXTEND A MAX OF 2 IN, (51 MM) BEYOND EITHER SURFACE OF WALL. AS AN ALTERNATE, NOM 16 IN. (406 MM) DIAM (OR SMALLER) MIN 0.028 (0.71 MM) THICK GALVANIZED SHEET STEEL SLEEVE CAST OR GROUTED INTO WALL ASSEMBLY FLUSH WITH WALL SURFACES.

2. THROUGH PENETRANTS - ONE METALLIC PIPE, CONDUIT OF TUBING TO BE INSTALLED EITHER CONCENTRICALLY OR ECCENTRICALLY WITHIN THE FIRESTOP SYSTEM. MAX ANNULAR SPACE BETWEEN PIPE, CONDUIT OR TUBING AND EDGE OF THROUGH OPENING OR SLEEVE IS DEPENDENT ON THE PARAMETERS SHOWN IN ITEM 4. MIN ANNULAR SPACE BETWEEN PIPE OR CONDUIT AND EDGE OF THROUGH OPENING IS 0 IN. (POINT CONTACT). MAX ANNULAR SPACE. TO BE AS SHOWN IN THE TABLE IN ITEM 4. PIPE, CONDUIT OR TUBING TO BE RIGIDLY SUPPORTED ON BOTH SIDES OF WALL ASSEMBLY. THE FOLLOWING TYPES AND SIZES OF METALLIC PIPES, CONDUITS OR TUBING MAY BE USED:

   A. STEEL PIPE - NOM 30 IN. (762 MM) DIAM (OR SMALLER) SCHEDULE 10 (OR HEAVIER) STEEL PIPE.
   B. CONDUIT - NOM 6 IN. (152 MM) DIAM (OR SMALLER) RIGID STEEL CONDUIT TUBING.
   C. CONDUIT - NOM 4 IN. (102 MM) DIAM (OR SMALLER) STEEL ELECTRICAL METALLIC

3. PACKING MATERIAL - POLYETHYLENE BACKER ROD OR NOM 1 IN. (25 MM) THICKNESS OF TIGHTLY - PACKED MINERAL WOOL BATT OR GLASS FIBER INSULATION FIRMLY PACKED INTO OPENING AS A PERMANENT FORM. PACKING MATERIAL TO BE RECESSED FROM BOTH SURFACES OF WALL AS REQUIRED TO ACCOMMODATE THE REQUIRED THICKNESS OF CAULK FILL MATERIAL (ITEM 4)

   3A FORMING MATERIAL ~ AS AN ALTERNATE TO THE PACKING MATERIAL IN ITEM 3, NOM 4 IN. (102 MM) WIDE STRIPS OF MIN 1/2 IN (13 MM) THICK COMPRESSIBLE MAT TO BE STACKED TO A THICKNESS GREATER THAN THE WIDTH OF THE ANNULAR SPACE AND COMPRESSION FITTED, EDGE-FIRST, TO FILL THE ANNULAR SPACE TO A MIN 4 IN. (102 MM) DEPTH. AS AN OPTION, THE STRIPS OF MIN 1/2 IN. (13 MM) THICK COMPRESSIBLE MAT MAY BE FOLDED IN HALF, LENGTHWISE, AND STACKED TO A THICKNESS GREATER THAN THE WIDTH OF THE ANNULAR SPACE AND COMPRESSION FITTED EDGE-FIRST TO FILL THE ANNULAR SPACE TO A MIN 2 IN. (51 MM) DEPTH. TOP OF FORMING MATERIAL TO BE RECESSED FROM TOP SURFACE OF FLOOR OR FROM BOTH SURFACES OF WALL AS NECESSARY TO ACCOMMODATE THE REQUIRED THICKNESS OF CAULK FILL MATERIAL.

4. FILL, VOID OR CAVITY MATERIAL - CAULK, SEALANT IN WALL ASSEMBLIES, REQUIRED CAULK THICKNESS TO BE INSTALLED SYMMETRICALLY ON BOTH SIDES OF WALL, FLUSH WITH WALL SURFACE. AT POINT CONTACT LOCATION BETWEEN PENETRANT AND SLEEVE OR BETWEEN PENETRANT AND CONCRETE, A WIN 1/4 IN. (6 MM) DIAM BEAD OF CAULK SHALL BE APPLIED AT TOP SURFACE OF FLOOR AND AT BOTH SURFACES OF WALL. THE HOURLY F RATINGS AND THE MIN REQUIRED CAULK THICKNESSES ARE DEPENDENT UPON A NUMBER OF PARAMETERS, AS SHOWN IN THE FOLLOWING TABLE:

4-1/2 (114)	1/2-6 (13-152)	1-3/8 (35)	1/4 (6) (a)	2
MIN WALL THICKNESS IN	NOM PIPE TUBE OR CONDUIT DAM IN	MAX ANNULAR SPACE IN	MIN CAULK THKNS IN	F RATING HR
2-1/2 (64)	1/2-12 (13-305)	1-3/8 (35)	1/2 (13)	2
2-1/2 (64)	1/2-12 (13-305)	3-1/4 (83)	1 (25)	2

(a) WIN 2 IN (51 MM) THICKNESS OF MINERAL WOOL BATT INSULATION OR FORMING MATERIAL (ITEM 3A) REQUIRED ANNULAR SPACE.

(b) WIN 1 IN (25 MM) THICKNESS OF MINERAL WOOL BATT INSULATION REQUIRED IN ANNULAR SPACE ON BOTH SIDES OF WALL ASSEMBLY. MIN 1 IN. (25 MM) THICKNESS OF CAULK TO BE INSTALLED FLUSH WITH EACH SURFACE OF WALL ASSEMBLY,

CONDUIT FIRESTOP PENETRATION FOR 1 HR AND 2 HR BLOCKWALLS | 4

UL SYSTEM No. W-L-1001
UL SYSTEM NO. C-AJ-1044 FOR BLOCK WALLS

(FORMERLY SYSTEM NO. 147)

F RATINGS-1 AND 2 HR (SEE ITEMS 2 AND 3)
T RATINGS-0, 1 AND 2 HR (SEE ITEM 3)
L RATING AT AMBIENT-LESS THAN 1 CFM/SQ FT
L RATING AT 400 F-LESS THAN 1 CFM/SQ FT

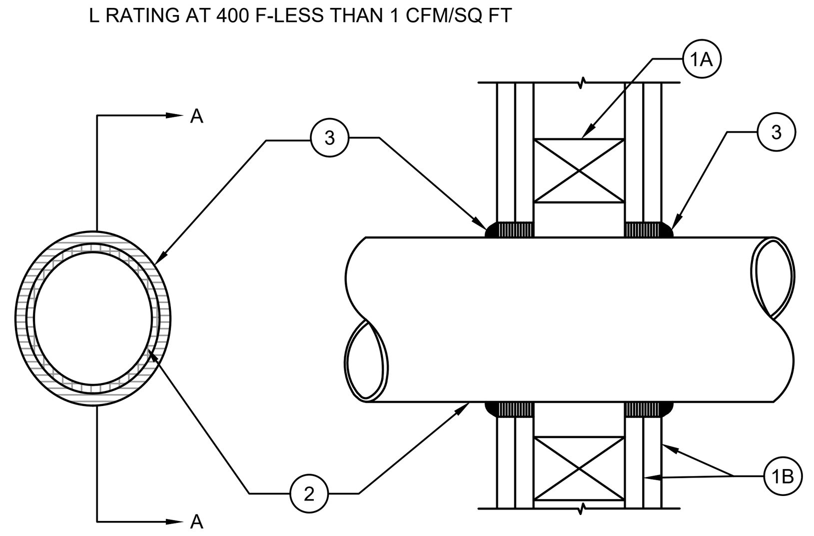

PROVIDE SEALANT AND PENETRATION PER UL APPROVED ASSEMBLY FOR WALL PENETRATIONS OF FIRE RATED ASSEMBLIES

SECTION A-A

1. WALL ASSEMBLY - THE 1 AND 2 HR FIRE RATED GYPSUM WALLBOARD/STUD WALL ASSEMBLY SHALL BE CONSTRUCTED OF THE MATERIALS AND IN THE MANNER DESCRIBED IN THE INDIVIDUAL U300 OR U400 SERIES WALL OR PARTITION DESIGNS IN THE UL FIRE RESISTANCE DIRECTORY AND SHALL INCLUDE THE FOLLOWING CONSTRUCTION FEATURES:

   A STUDS - WALL FRAMING MAY CONSIST OF EITHER WOOD STUDS (MAX 2 H FIRE RATED ASSEMBLIES) OR STEEL CHANNEL STUDS. WOOD STUDS TO CONSIST OF NOM 2 BY 4 IN. LUMBER SPACED 16 IN. OC WITH NOM 2 BY 4 IN. LUMBER END PLATES AND CROSS BRACES. STEEL STUDS TO BE MIN 3-5/8 IN. WIDE BY 1-3/8 IN. DEEP CHANNELS SPACED MAX 24 IN. OC.

   B GYPSUM BOARD - NOM 1/2 OR 5/8 IN. THICK, 4 FT. WIDE WITH SQUARE OR TAPERED EDGES. THE GYPSUM WALLBOARD TYPE, THICKNESS, NUMBER OF LAYERS, FASTENER TYPE AND SHEET ORIENTATION SHALL BE AS SPECIFIED IN THE INDIVIDUAL U300 OR U400 SERIES DESIGN IN THE UL FIRE RESISTANCE DIRECTORY. MAX DIAMETER OF OPENING IS 26 IN.

2. THROUGH-PENETRANT - ONE METALLIC PIPE, CONDUIT OR TUBING INSTALLED EITHER CONCENTRICALLY OR ECCENTRICALLY WITHIN THE FIRESTOP SYSTEM. THE ANNULAR SPACE BETWEEN PIPE, CONDUIT OR TUBING AND PERIPHERY OF OPENING SHALL BE MIN OF 0 IN. (POINT CONTACT) TO MAX 2 IN. PIPE, CONDUIT OR TUBING TO BE RIGIDLY SUPPORTED ON BOTH SIDES OF WALL ASSEMBLY. THE FOLLOWING TYPES AND SIZES OF METALLIC PIPES, CONDUITS OR TUBING WAY BE USED:

   A STEEL PIPE - NOM 24 IN. DIAM (OR SMALLER) SCHEDULE 10 (OR HEAVIER) STEEL PIPE.
   C CONDUIT - NOM 6 IN. DIAM (OR SMALLER) STEEL CONDUIT OR NOM 4 IN DIAM (OR SMALLER) STEEL ELECTRICAL METALLIC TUBING

3. FILL, VOID OR CAVITY MATERIAL - CAULK -MIN 5/8. 1-1/4,1-7/8 AND 2-1/2 IN. THICKNESS OF CAULK FOR 1 AND 2 HR RATED ASSEMBUES, RESPECTIVELY, APPLIED WITHIN ANNULUS, FLUSH WITH BOTH SURFACES OF WALL. MIN 1/4 IN. DIAM BEAD OF CAULK APPLIED TO GYPSUM BOARD/PENETRANT INTERFACE AT POINT CONTACT LOCATION ON BOTH SIDES OF WALL THE HOURLY F RATING OF THE FIRESTOP SYSTEM IS DEPENDENT UPON THE HOURLY FIRE RATING OF THE WALL ASSEMBLY IN WHICH IT IS INSTALLED, AS SHOWN IN THE FOLLOWING TABLE. THE HOURLY T RATING OF THE FIRESTOP SYSTEM IS DEPENDENT UPON THE TYPE OR SIZE OF THE PIPE OR CONDUIT AND THE HOURLY FIRE RATING OF THE WALL ASSEMBLY IN WHICH IT IS INSTALLED, AS TABULATED BELOW:

MAX PIPE OR CONDUIT DIAMETER	F RATING HR	T_-RATING HR
1	1 OR 2	0,1 OR 2
4	1 OR 2	0

THE CONTRACTOR SHALL SUBMIT THE ACTUAL UL DETAIL WITH THE PERMIT DRAWINGS
THE UL DETAL HAS BEEN MODIFIED FOR ELECTRICAL 1 AND 2 HOURS. PLUMBING PIPING AND 3 AND 4 HR REFERENCES ARE NOT SHOWN. THE DETAIL ALSO APPLIES FOR SPECIFIC 2 HOUR AND 4 HOUR LOCATIONS

CONDUIT FIRESTOP PENETRATION FOR 1 HR AND 2 HR STUD WALL | 3

UL SYSTEM No. W-L-3145

F RATING -- 1 AND 2 HR (SEE ITEMS 1)
T RATING -- 1/4 AND 1/2 HR (SEE ITEM 1)

CONDUIT MUST BE SECURED TO WALL WITH PROPER FITTINGS

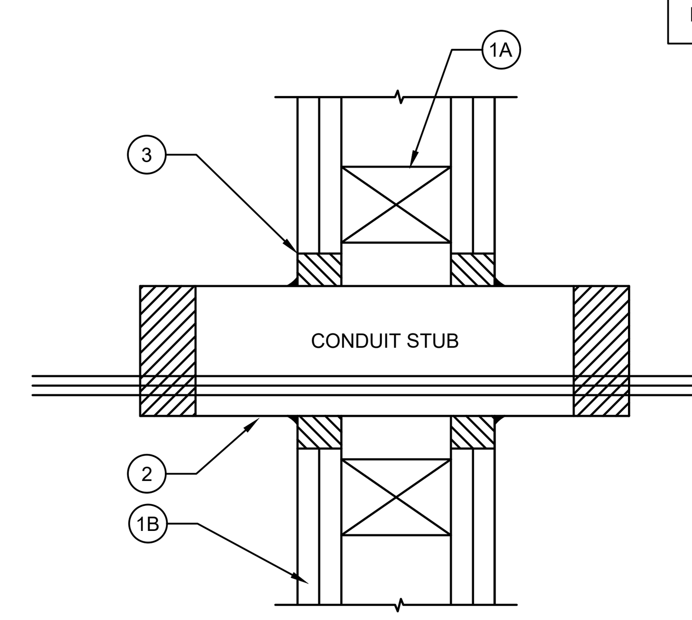

SECTION A-A

1. WALL ASSEMBLY -THE 1 OR 2 HR FIRE-RATED GYPSUM BOARD/STUD WALL ASSEMBLY SHALL BE CONSTRUCTED OF THE MATERIALS AND IN THE MANNER DESCRIBED IN THE INDIVIDUAL U300, U400 OR V400 SERIES WALL AND PARTITION DESIGNS IN THE UL FIRE RESISTANCE DIRECTORY AND SHALL INCLUDE THE FOLLOWING CONSTRUCTION
FEATURES:

   A STUDS - WALL FRAMING SHALL CONSIST OF EITHER WOOD STUDS OR STEEL CHANNEL STUDS. WOOD STUDS TO CONSIST OF NOM 2 BY 4 IN. (51 BY 102 MM) LUMBER SPACED 16 IN. (406 MM) OC. STEEL STUDS TO BE MIN 3-5/8 IN. (92 MM) WIDE AND SPACED 24 IN. (610 MM) OC.

   B GYPSUM BOARD - 5/8 IN. (16 MM) THICK, 4 FT (1219 MM) WIDE WITH SQUARE OR TAPERED EDGES. THE GYPSUM BOARD TYPE, THICKNESS, NUMBER OF LAYERS, FASTENER TYPE AND SHEET ORIENTATION SHALL BE AS SPECIFIED IN THE INDIVIDUAL U300, U400 OR V400 SERIES DESIGNS IN THE UL FIRE. RESISTANCE DIRECTORY. THE HOURLY F RATING OF THE FIRESTOP SYSTEM IS EQUAL TO THE HOURLY FIRE RATING OF THE WALL ASSEMBLY IN WHICH IT IS INSTALLED.

2. CABLES - AGGREGATE CROSS-SECTIONAL AREA OF CABLES IN SPLIT SLEEVE TO BE MIN 8 PERCENT TO MAX 48 PERCENT OF THE AGGREGATE CROSS-SECTIONAL AREA OF THE SPLIT SLEEVE. CABLES TO BE RIGIDLY SUPPORTED ON BOTH SIDES OF WALL ASSEMBLY, ANY COMBINATION OF THE FOLLOWING TYPES AND SIZES OF CABLES MAY BE USED:

   A MAX 200 PAIR NO. 24 AWG (OR SMALLER) COPPER CONDUCTOR CABLE WITH POLYVINYL CHLORIDE (PVC) JACKETING AND INSULATION.

   B MAX 1/C, 750 KCMIL POWER CABLE WITH COPPER CONDUCTORS AND CROSS-LINKED POLYETHYLENE (XLPE) JACKETING.

   C MAX 3/C NO. 2/0 AWG (OR SMALLER) ALUMINUM OR COPPER CONDUCTOR SERVICE ENTRANCE CABLE WITH PVC INSULATION AND JACKET.

   D MAX 3/C NO. 8 AWG (OR SMALLER) NONMETALLIC SHEATHED (ROMEX) CABLE WITH COPPER CONDUCTORS, PVC INSULATION AND JACKET.

   E MAX 7/C NO. 12 AWG (OR SMALLER) MULTI CONDUCTOR POWER AND CONTROL CABLES WITH XLPE OR PVC INSULATION AND XLPE OR PVC JACKET.

   F MAX RC59/U (OR SMALLER) COAXIAL CABLE WITH FLUORINATED ETHYLENE INSULATION AND JACKETING.

   G MAX 62.5/48 FIBER OPTIC CABLE WITH PVC INSULATION AND JACKETING.

   H MAX 4 PAIR NO. 24 AWG (OR SMALLER) COPPER CONDUCTOR CATEGORY 5 WITH HYLAR INSULATION AND JACKET.

3. FIRESTOP SYSTEM - THE FIRESTOP SYSTEM SHALL CONSIST OF THE FOLLOWING:

   A FIRESTOP DEVICE -THREADED STEEL SLEEVE HALVES INCORPORATING SPLIT NUTS AND SPLIT WASHERS SIZED TO FIT THE SPECIFIC DIAM OF THE OPENING. DEVICE SHALL BE INSTALLED AROUND CABLES IN ACCORDANCE WITH THE ACCOMPANYING INSTALLATION INSTRUCTIONS. DEVICE PROVIDED IN NOM 1, 2 AND 4 IN. (25, 51 AND 102 MM) SIZES. MAX DIAM OF OPENING IN WALL FOR 1, 2 AND 4 IN. (25, 51 AND 102 MM) SIZE DEVICES ARE 1-1/4, 2-7/16 AND 4-1/2 IN. (32, 62 AND 114 MM) RESPECTIVELY.

   B FILL, VOID OR CAVITY MATERIAL - PUTTY - MIN 1 IN. THICKNESS OF FILL MATERIAL APPLIED WITHIN THE CONDUIT FLUSH WITH BOTH ENDS.

REFER TO UL BOOK FOR PROPER PENETRATION ASSEMBLY SUBMIT UL DETAIL TO WIRING INSPECTOR WITH PERMIT APPLICATION

CABLE CONDUIT SLEEVE THROUGH PENETRATION FIRESTOP SYSTEM FOR 1 HR RATED AND SMOKE TIGHT STUD WALLS | 2

GOUVIS engineering consulting group, inc. ®

15 Studebaker
Irvine
CA 92618

Irvine
tel 949.752.1612
fax 949.752.5321

Palm Springs
tel 760.323.5090

DATE SIGNED: 1/30/24

RESTRICTIVE NOTICE

THESE DESIGNS, DRAWINGS, AND SPECIFICATIONS ARE THE EXCLUSIVE PROPERTY OF GOUVIS ENGINEERING CONSULTING GROUP. THEY ARE THE SUBJECTOF COPYRIGHT AND OTHER LEGAL PROTECTION. THEY MAY BE USED ONLY BY THEIR INTENDED RECIPIENT AND ONLY FOR THE PROJECT DEPICTED HEREIN. NO PART OF THESE DRAWINGS ARE TO BE COPIED, TRANSFERRED, REPRODUCED, NOR CAN THEY BE USED, IN WHOLE OR IN PART, BY ANY OTHER PERSON OR FOR ANY OTHER PROJECT OR STRUCTURE, WITHOUT THE PRIOR EXPRESS WRITTEN CONSENT OF GOUVIS ENGINEERING CONSULTING GROUP

© 2017 GOUVIS ENGINEERING CONSULTING GROUP INC. - ALL RIGHTS RESERVED

PROJECT:
Tenant Square

DEVELOPER:
Osito Holdings LLC

ARCHITECT:
Gary Moore & Associates

LOCATION:
Morgan Hill
Santa Clara
CA

REVISIONS

NO.	DATE	DESCRIPTION
1	02/02/23	PLAN CHECK
2	11/01/23	PLAN CHECK
3	01/30/24	FIRE COMMENT

SHEET NAME:
DETAILS

PROJECT NUMBER:
66074

ENGINEER:
DRAFTER:

SHEET NUMBER:
E-0.3A

ISSUED DATE:XX/XX/XX

MECHANICAL EQUIPMENT SCHEDULE

ITEM	DESCRIPTION	EQUIPMENT RATING					FUSED DISCONNECT	CIRCUIT DATA CONDUIT - WIRE
			MOTOR					
		VOLTS	HP	FLA	MCA	MOCP		
HP 36	HEAT PUMP	240	-	24	30	50	60AS-2P-50AF	PX-27,29 1"C-2#6, 1#10E.G.
FC 36	FAN COIL	240	-	4	5	-	$^{M}_{2}$	POWERED FROM OUTDOOR UNIT
EF R	EXHAUST FAN	120	14.5 W	-	-	-	^{M}	PX-XX 3/4"C-2#12, 1#12E.G.
EF B	EXHAUST FAN	120	29.4 W	-	-	-	^{M}	PX-XX 3/4"C-2#12, 1#12E.G.
EF MB	EXHAUST FAN	120	37.0 W	-	-	-	^{M}	PX-XX 3/4"C-2#12, 1#12E.G.

PLUMBING EQUIPMENT SCHEDULE

WH 1	ELECTRIC WATER HEATER	240	5760 W					PX-26,28 3/4"C-2#10, 1#10E.G.

NOTE :
1. FUSED/FUSED SIZE PER MANUFACTURER'S RECOMMENDATION. ELECTRICAL CONTRACTOR SHALL VERIFY PRIOR TO ROUGH-IN.
2. PROVIDE (1) 3/4" C.O. WITH PULL WIRE FROM EQUIPMENT LOCATION TO RESPECTIVE EQUIPMENT CONTROL DEVICE FOR CONTROL WIRING AS REQUIRED. REFER TO MECHANICAL FOR EXACT CONTROL LOCATION AND ADDITIONAL REQUIREMENTS PRIOR TO ROUGH-IN.

SMOKE DETECTORS NOTES

1. SMOKE ALARMS AND SMOKE DETECTORS SHALL NOT BE LOCATED WHERE AMBIENT CONDITION, INCLUDING HUMIDITY AND TEMPERATURE, ARE OUTSIDE THE LIMITS SPECIFIED BY THE MANUFACTURER'S PUBLISHED INSTRUCTIONS.
2. SMOKE ALARMS OR SMOKE DETECTORS SHALL BE INSTALLED A MINIMUM OF 20 FOOT HORIZONTAL DISTANCE FROM A PERMANENTLY INSTALLED COOKING APPLIANCE, EXCEPTION IONIZATION SMOKE ALARMS OR PHOTOELECTRIC SMOKE ALARMS PER CODE.
3. INSTALLATION NEAR BATHROOMS. SMOKE ALARMS SHALL BE INSTALLED NOT LESS THAN A 3 FOOT HORIZONTAL DISTANCE FROM THE DOOR OR OPENING OF A BATHROOM THAT CONTAINS A BATHTUB OR SHOWER UNLESS THIS WOULD PREVENT PLACEMENT OF A SMOKE ALARM REQUIRED BY OTHER SECTION OF THE CODE.
4. SMOKE ALARMS AND SMOKE DETECTORS SHALL NOT BE INSTALLED WITH A 36 INCH HORIZONTAL PATH FROM THE SUPPLY REGISTERS OF A FORCED AIR HEATING OR COOLING SYSTEM AND SHLLE BE INSTALLED OUTSIDE OF THE DIRECT AIR FLOW FROM THOSE REGISTERS.
5. CARBON MONOXIDE/ SMOKE DETECTORS SHALL BE PERMANENTLY WIRED AND PROVIDED WITH BATTERY BACK-UP. SMOKE DETECTORS ARE TO BE INTERCONNECTED WITH-IN EACH UNIT SO THAT ALL DETECTORS WITH-IN THE UNIT WILL SOUND THEIR ALARMS ON ACTIVATION OF ANY DETECTOR IN THE UNIT.
6. WHERE THE HIGHEST POINT OF A CEILING IN A ROOM THAT OPENS TO THE HALLWAY SERVING THE BEDROOMS EXCEEDS THAT OF THE OPENING INTO THE HALLWAY BE 24 INCHES OR MORE, SMOKE DETECTORS SHALL BE INSTALLED IN THE HALLWAY AND IN THE ADJACENT ROOM WITHIN 12 INCHES FROM THE HIGHEST POINT OF THE CEILING.
7. CARBON MONOXIDE/ SMOKE DETECTORS INTERCONNECTED SHALL BE INSTALLED WITHIN EACH DWELLING UNIT BEFORE APPROVAL BY THE FIRE DEPARTMENT.

EQUIPMENT SCHEDULE

UNIT SERVICE LOAD CALCULATION

NEC	LOAD GROUP	UNIT A	UNIT B
	Area SQ. FT.	1517	1557
	GENERAL LIGHTING		
220.82(B)(1)	3X Area	4551	4671
220.82(B)(2)	Small Appliance	3000	3000
	Laundry Load (Washer)	1500	1500
	General Lighting Subtotal	9051	9171
220.82(B)(3)a	OTHER FIXED APPLIANCES		
	Garbage Disposer	1200	1200
	Dishwasher	1200	1200
	Microwave	1500	1500
	Garage Door Opener	1200	1200
	Total Fixed Appliance	5100	5100
220.82(B)(3)b	COOKING LOAD		
	Electric Range - Oven	8000	8000
	Total Cooking Load	8000	8000
220.82(B)(3)c	LAUNDRY LOADS		
	Electric Clothes Dryer	5000	5000
	Total Laundry Load	5000	5000
220.82(B)(3)d	WATER HEATERS		
	Electrical Water Heater	5760	5760
	TOTAL GENERAL LOAD	32911	33031
	First 10KVA at 100%	10000	10000
	Remainder at 40%	9164.4	9212.4
	Subtotal General Load	19164.4	19212.4
220.82(C)	HEATING AND AIR-CONDITIONING LOAD		
	Total CU/HP Load	6720	6720
	Fancoil Unit/Air Handling Unit	0	0
	Total	6720	6720
	OTHER LOADS		
	ADF	180	180
	EV Charger	12000	12000
	Total Other Load	12180	12180
	CALCULATED LOAD WITH DEMAND FACTOR	38064.4	38112.4
	AMPS CALCULATIONS		
	Volt	240	240
	Phase	1	1
	Amps	159	159

3

LOAD CALCULATION

KEYED NOTES

1. VERIFY WITH SERVICE PLANNER FOR AIC RATING AND ELECTRICAL INFORMATION BEFORE ISSUING ANY BID. NOTIFY ENGINEER IMMEDIATELY IF MAJOR DISCREPANCIES OCCURS.
2. STUB UP CONDUIT FOR PV SYSTEM. PV SYSTEM SHALL BE SUBMITTED UNDER A SEPARATE PERMIT. ELECTRICAL CONTRACTOR SHALL COORDINATE WITH PV CONSULTANT FOR THE EXACT SIZE OF CONDUIT AND ALL ELECTRICAL REQUIREMENTS. (REFER TO CF1R ENERGY REPORTS FOR MORE INFORMATION)

GENERAL NOTES

1. THE MAXIMUM AVAILABLE FAULT CURRENT IS BASED ON WORST CASE FAULT CURRENT PUBLISHED BY THE UTILITY COMPANY. CONTRACTOR TO OBTAIN FAULT CURRENT LETTER FROM UTILITY COMPANY FOR EACH SERVICE BEFORE ORDERING SWITCHBOARD. IF AVAILABLE FAULT CURRENT IS HIGHER THAN SHOWN IN THE DRAWINGS, CONTACT ELECTRICAL ENGINEER IMMEDIATELY.
2. LETTER FOR SHORT CIRCUIT CURRENT VALUE FROM UTILITY COMPANY SHALL BE AVAILABLE AT THE JOB SITE FOR INSPECTION.
3. ELECTRICAL EQUIPMENT SHALL BE LISTED BY THE CITY, WHERE THE PROJECT IS LOCATED, RECOGNIZED ELECTRICAL TESTING LABORATORY OR APPROVED BY THE DEPARTMENT.
4. ALL NEW CIRCUIT BREAKERS, FUSIBLE SWITCHES AND ELECTRICAL EQUIPMENT SHALL BE FULLY RATED HAVING A SHORT-CIRCUIT (AIC) RATING EXCEEDING THE AVAILABLE SHORT-CIRCUIT CURRENT AT THE EQUIPMENT. SERIES RATING OF EQUIPMENT IS NOT ALLOWED.
5. ALL SWITCHBOARDS AND DISTRIBUTION BOARDS SHALL HAVE:
   - 5.1. TIN-PLATED ALUMINUM BUSSING WITH RECTANGULAR CROSS SECTION, HORIZONTAL AND VERTICAL BUSSING SHALL BE FULL LENGTH AND SHALL HAVE PROVISIONS FOR FUTURE EXTENSIONS. ALL BUSSING SHALL HAVE MINIMUM WITHSTAND RATING EQUAL TO THE AVAILABLE FAULT CURRENT INDICATED. ALL VERTICAL AND HORIZONTAL BUSSING SHALL BE RATED AT FULL CAPACITY IN ALL SWITCHBOARD AND DISTRIBUTION BOARD SECTIONS. PROVIDE 100% NEUTRAL BUSSING MINIMUM UNLESS OTHERWISE NOTED. PROVIDE FULL LENGTH GROUND BUS AND, WHERE INDICATED ON PLANS, ISOLATED GROUND BUSSING. PROVIDE REAR WIRE WAY IN ALL SWITCHBOARD SECTIONS.
   - 5.2. LUGS SUITABLE FOR USE WITH COPPER OR ALUMINUM CONDUCTORS LISTED FOR USE WITH 75 DEGREE CELSIUS AMPACITY CONDUCTORS.
   - 5.3. PERMANENT PLACARD(S) MARKED PER THE SPECIFICATIONS AND PER NEC (OR CEC-WHERE ADOPTED) SECTIONS 225.37, 230.2(E), 690.56, 692.56, 700.7, 701.7, 702.7, AND 705.10 DENOTING THE PRESENCE OF ADDITIONAL SERVICES, PHOTOVOLTAIC SYSTEMS, FUEL CELLS, EMERGENCY OR STAND-BY POWER SOURCES AS APPLICABLE.
   - 5.4. SINGLE LINE DIAGRAM SHOWN IS A "FULLY RATED SYSTEM" UNLESS NOTED. OTHERWISE.
   - 5.5. THE MAXIMUM COMBINED VOLTAGE DROP ON BOTH INSTALLED FEEDER CONDUCTORS AND BRANCH CONDUCTORS TO THE FARTHEST CONNECTED LOAD OR OUTLET SHALL NOT EXCEED 5 PERCENT.
   - 5.6. ALL ELECTRICAL EQUIPMENT SHALL BE LABELED, LISTED, OR CERTIFIED BY A NATIONALLY RECOGNIZED TESTING LABORATORY ACCREDITED BY THE "UNITED STATES OCCUPATIONAL SAFETY HEALTH ADMINISTRATION".

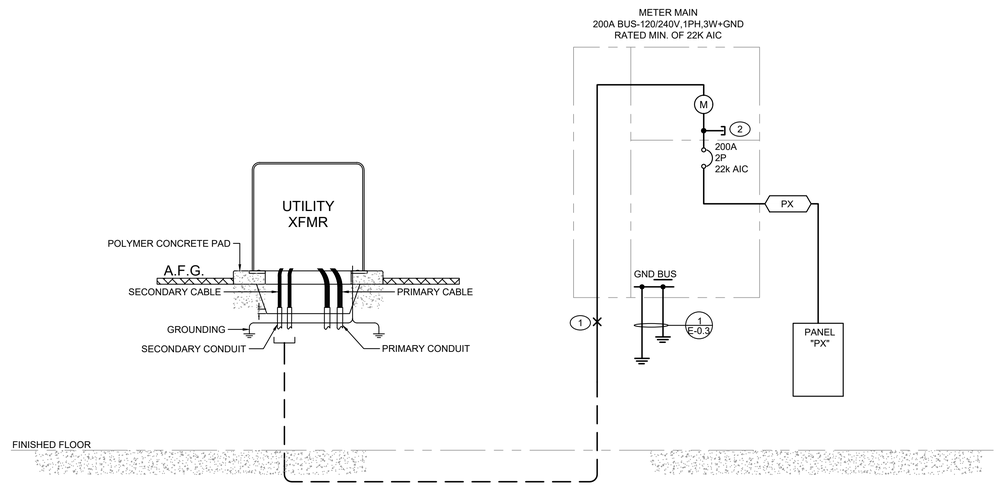

A TYPICAL FOR ALL UNIT PLAN

SCALE: NONE

Voltage Drop and Short Circuit Calculation

					FEEDER					CONDUIT					FAULT CURRENT				
CABLE NAME	PANEL NAME	UNIT/ CIRCUIT	VOLTS	PHASE	DEMAND AMPS	AMPS	PARALLEL RUNS	PHASE CONDUCTOR	EQUIPMENT GROUNDING CONDUCTOR	CONDUCTOR MATERIAL	CONDUCTOR INSULATION	CONDUIT TYPE	CONDUIT SIZE	FILL% (<40%)	DISTANCE (FT) 'L'	%VD	FAULT CURRENT	Isc	AIC
PX	PX	UNIT X	240	1	159	200	1	250	4	ALUM	THHN	EMT	2	37.94%	20	0.26	22000	16891	22000

TYPICAL UNIT - SINGLE LINE DIAGRAM

ISSUED DATE: XX/XX/XX

GOUVIS engineering consulting group, inc.

15 Studebaker
Irvine
CA 92618

Irvine
tel 949.752.1612
fax 949.752.5321

Palm Springs
tel 760.323.5090

REGISTERED PROFESSIONAL ENGINEER
BERGO HOSSEINZADEH
E 22037
ELECTRICAL
STATE OF CALIFORNIA

DATE SIGNED: 1/30/24

RESTRICTIVE NOTICE

THESE DESIGNS, DRAWINGS, AND SPECIFICATIONS ARE THE EXCLUSIVE PROPERTY OF GOUVIS ENGINEERING CONSULTING GROUP. THEY ARE THE SUBJECTOF COPYRIGHT AND OTHER LEGAL PROTECTION. THEY MAY BE USED ONLY BY THEIR INTENDED RECIPIENT AND ONLY FOR THE PROJECT DEPICTED HEREIN. NO PART OF THESE DRAWINGS ARE TO BE COPIED, TRANSFERRED, REPRODUCED, NOR CAN THEY BE USED, IN WHOLE OR IN PART, BY ANY OTHER PERSON OR FOR ANY OTHER PROJECT OR STRUCTURE, WITHOUT THE PRIOR EXPRESS WRITTEN CONSENT OF GOUVIS ENGINEERING CONSULTING GROUP

© 2017 GOUVIS ENGINEERING CONSULTING GROUP INC. - ALL RIGHTS RESERVED

PROJECT:
Tenant Square

DEVELOPER:
Osito Holdings LLC

ARCHITECT:
Gary Moore & Associates

LOCATION:
Morgan Hill
Santa Clara
CA

REVISIONS

NO.	DATE	DESCRIPTION
1	02/02/23	PLAN CHECK
2	11/01/23	PLAN CHECK
3	01/30/24	FIRE COMMENT

SHEET NAME:
SINGLE LINE DIAGRAM, LOAD CALCULATION & EQUIPMENT SCHEDULE

PROJECT NUMBER:
66074

ENGINEER:

DRAFTER:

SHEET NUMBER:
E-0.4

PANEL "PA"

	MOUNTING	RECESSED	DOUBLE LUG	NO	VOLTS	120/240	MAIN	MCB																		
	NEMA 3R	NO	200% NEUTRAL	NO	PHASE	1	BUS	200																		
	FEED THRU	NO	I/G BUS	NO	WIRE	3	A.I.C.	22000																		

Wire Size	CIRC	LOCATION	A	B	LTG	CONV	KIT	RECP	MISC	BKR	NOTES		NOTES	BKR	MISC	RECP	KIT	CONV	LTG	A	B	LOCATION	CIRC	Wire Size
#14CU	1	GENERAL LTG 1	1243							15/1	A		A	15/1						1116		GENERAL LTG 2	2	#14CU
#14CU	3	GENERAL LTG 3		1428						15/1	A		A	15/1							1284	GENERAL LTG 4	4	#14CU
	5	SPARE	0							15/1				15/1						0		SPARE	6	
#12CU	7	SMALL APPLIANCES		1500						20/1	A,G		A,G	20/1							1200	GARBAGE DISPOSAL	8	#12CU
#12CU	9	SMALL APPLIANCES	1500							20/1	A,G		A,G	20/1						1200		DISHWASHER	10	#12CU
#12CU	11	EXT. REC		540						20/1	G		G	20/1							1200	GARAGE DOOR	12	#12CU
#14CU	13	EXT. LTG	300							15/1			G	20/1						540		GARAGE REC	14	#12CU
#12CU	15	BATH REC		1500						20/1	A,G		A,G	20/1							1500	WASHER	16	#12CU
#12CU	17	MICROWAVE	1500							20/1	A		A,G	30/2						2500		ELECTRIC DRYER	18	#10CU
#14CU	19	MEDIA CAB		180						15/1				--							2500	--	20	
#10CU	21	C.P.	180							20/1				50/2						4000		ELECTRIC RANGE.	22	#6CU
	23	SPARE		0						15/1				--							4000	--	24	
	25	SPARE	0							15/1			G	30/2						2880		W.H.	26	#10CU
#6CU	27	FC-36 VIA HP-36		3360						50/2				--							2880	--	28	
3	29	--	3360							--				15/1						0		SPARE	30	
	31	SPARE		0						15/1				15/1							0	SPARE	32	
	33	SPARE	0							15/1				15/2						0		SOLAR MONIT. MOUDLER	34	
	35	SPARE		0						15/1				--							0	--	36	
**	37	EV CAPABLE	3840							40/2			PV							0		SOLAR READY CONTROLLER	38	
	39	--		3840						--											0	--	40	

* REFER TO RESPECTIVE DWELLING UNIT LOAD CALCULATIONS FOR FEEDER/PANEL LOAD JUSTIFICATION *
** REFER TO MANUFACTURER SPEC SHEET FOR EXACT ELECTRICAL REQUIREMENTS, WIRE AND BREAKER SIZE.

PANEL "PB"

	MOUNTING	RECESSED	DOUBLE LUG	NO	VOLTS	120/240	MAIN	MCB																		
	NEMA 3R	NO	200% NEUTRAL	NO	PHASE	1	BUS	200																		
	FEED THRU	NO	I/G BUS	NO	WIRE	3	A.I.C.	22000																		

Wire Size	CIRC	LOCATION	A	B	LTG	CONV	KIT	RECP	MISC	BKR	NOTES		NOTES	BKR	MISC	RECP	KIT	CONV	LTG	A	B	LOCATION	CIRC	Wire Size
#14CU	1	GENERAL LTG 1	1342							15/1	A		A	15/1						1416		GENERAL LTG 2	2	#14CU
#14CU	3	GENERAL LTG 3		1428						15/1	A		A	15/1							1363	GENERAL LTG 4	4	#14CU
	5	SPARE	0							15/1				15/1						0		SPARE	6	
#12CU	7	SMALL APPLIANCES		1500						20/1	A,G		A,G	20/1							1200	GARBAGE DISPOSAL	8	#12CU
#12CU	9	SMALL APPLIANCES	1500							20/1	A,G		A,G	20/1						1200		DISHWASHER	10	#12CU
#12CU	11	EXT. REC		900						20/1	G		G	20/1							1200	GARAGE DOOR	12	#12CU
#14CU	13	EXT. LTG	348							15/1			G	20/1						540		GARAGE REC	14	#12CU
#12CU	15	BATH REC		1500						20/1	A,G		A,G	20/1							1500	WASHER	16	#12CU
#12CU	17	MICROWAVE	1500							20/1	A		A,G	30/2						2500		ELECTRIC DRYER	18	#10CU
#14CU	19	MEDIA CAB		180						15/1				--							2500	--	20	
#10CU	21	C.P.	180							20/1				50/2						4000		ELECTRIC RANGE.	22	#6CU
	23	SPARE		0						15/1				--							4000	--	24	
	25	SPARE	0							15/1			G	30/2						2880		W.H.	26	#10CU
#6CU	27	FC-36 VIA HP-36		3360						50/2				--							2880	--	28	
3	29	--	3360							--				15/1						0		SPARE	30	
	31	SPARE		0						15/1				15/1							0	SPARE	32	
	33	SPARE	0							15/1				15/2						0		SOLAR MONIT. MOUDLER	34	
	35	SPARE		0						15/1				--							0	--	36	
**	37	EV CAPABLE	3840							40/2			PV							0		SOLAR READY CONTROLLER	38	
	39	--		3840						--											0	--	40	

* REFER TO RESPECTIVE DWELLING UNIT LOAD CALCULATIONS FOR FEEDER/PANEL LOAD JUSTIFICATION *
** REFER TO MANUFACTURER SPEC SHEET FOR EXACT ELECTRICAL REQUIREMENTS, WIRE AND BREAKER SIZE.

PANEL NOTES

"A"	AFCI PROTECTION TYPE CIRCUIT BREAKER
"G"	GFCI PROTECTION TYPE RECEPTACLE
"B"	BACKFEED TYPE CIRCUIT BREAKER
"DF"	DUAL-FUNCTION AFCI/GFCI PROTECTION TYPE CIRCUIT BREAKER
"P"	SPACE PROVISION ONLY. NO BREAKER REQUIRED.
"PV"	SOLAR READY BY OTHERS

PANEL INDEX

PA	PB

PANEL SCHEDULES

ISSUED DATE:XX/XX/XX

GOUVIS engineering consulting group, inc.®
15 Studebaker
Irvine
CA 92618

Irvine
tel 949.752.1612
fax 949.752.5321

Palm Springs
tel 760.323.5090

REGISTERED PROFESSIONAL ENGINEER
BERND ROSSWEINZ
E 22037
ELECTRICAL
STATE OF CALIFORNIA

DATE SIGNED: 1/30/24

RESTRICTIVE NOTICE

THESE DESIGNS, DRAWINGS, AND SPECIFICATIONS ARE THE EXCLUSIVE PROPERTY OF GOUVIS ENGINEERING CONSULTING GROUP. THEY ARE THE SUBJECTOF COPYRIGHT AND OTHER LEGAL PROTECTION. THEY MAY BE USED ONLY BY THEIR INTENDED RECIPIENT AND ONLY FOR THE PROJECT DEPICTED HEREIN. NO PART OF THESE DRAWINGS ARE TO BE COPIED, TRANSFERRED, REPRODUCED, NOR CAN THEY BE USED, IN WHOLE OR IN PART, BY ANY OTHER PERSON OR FOR ANY OTHER PROJECT OR STRUCTURE, WITHOUT THE PRIOR EXPRESS WRITTEN CONSENT OF GOUVIS ENGINEERING CONSULTING GROUP

© 2017 GOUVIS ENGINEERING CONSULTING GROUP INC. - ALL RIGHTS RESERVED

PROJECT:
Tenant Square

DEVELOPER:
Osito Holdings LLC

ARCHITECT:
Gary Moore & Associates

LOCATION:
Morgan Hill
Santa Clara
CA

REVISIONS

NO.	DATE	DESCRIPTION
1	02/02/23	PLAN CHECK
2	11/01/23	PLAN CHECK
3	01/30/24	FIRE COMMENT

SHEET NAME:
PANEL SCHEDULES

PROJECT NUMBER:
66074

ENGINEER:

DRAFTER:

SHEET NUMBER:
E-0.5

HATCHED UNIT INDICATES
A "BELOW MARKET RATE" UNIT

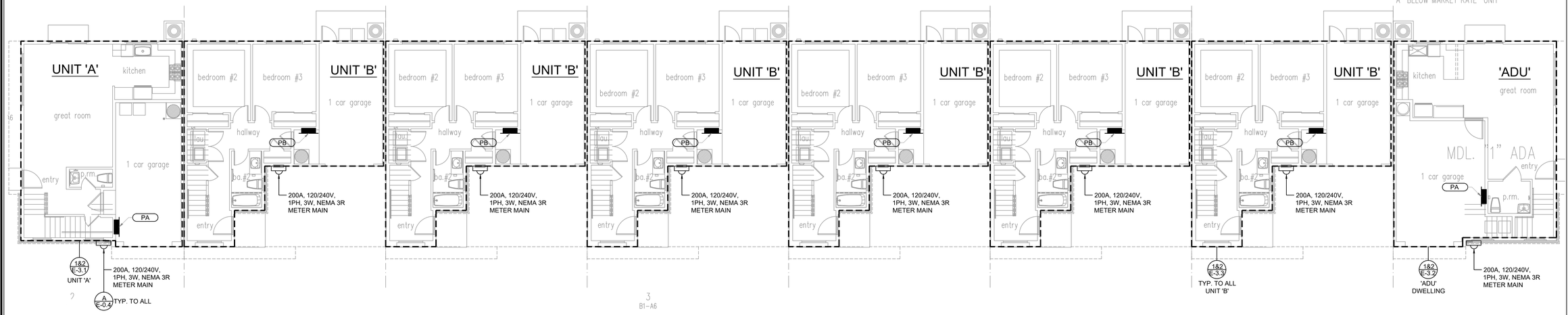

BLDG 1 - 1ST LEVEL FLOOR PLAN | 3

A BELOW MARKET RATE UNIT

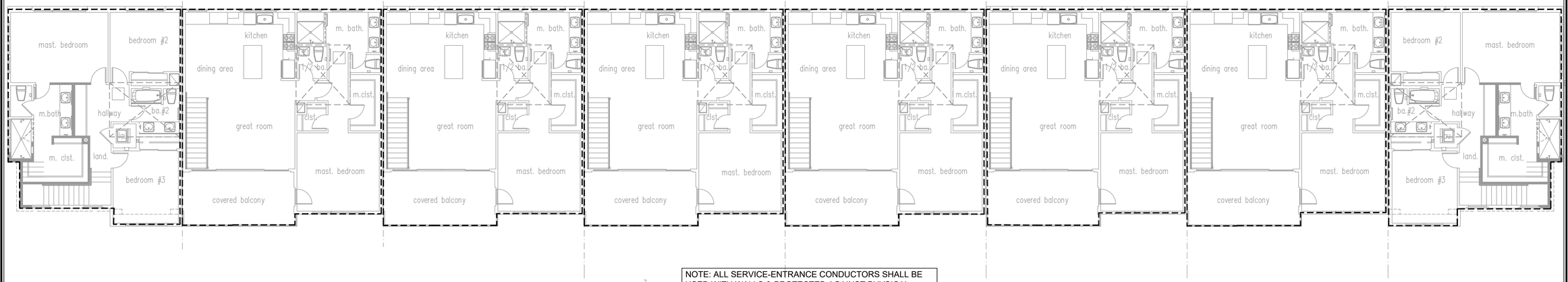

NOTE: ALL SERVICE-ENTRANCE CONDUCTORS SHALL BE USED WITH WALLS & PROTECTED AGAINST PHYSICAL DAMAGE IN COMPLIANCE WITH ALL OF THE PROVISIONS OF PART II OF ARTICLE 334 FOR NON-METALLIC SHEATHED CABLES [CEC ARCLE 338, II, (4)(a)]

BLDG 1 - 2ND LEVEL FLOOR PLAN | 2

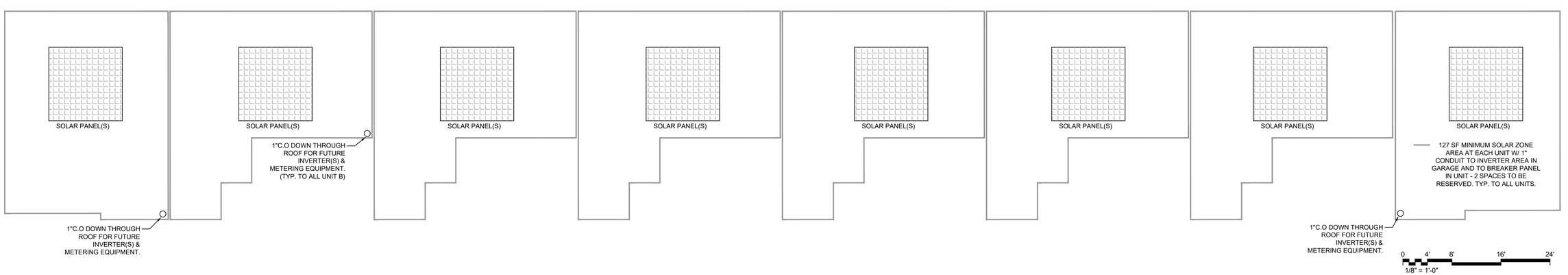

BLDG 1 - ROOF PLAN | 1

ISSUED DATE: XX/XX/XX

GOUVIS engineering
consulting group, inc.

15 Studebaker
Irvine
CA 92618

Irvine
tel 949.752.1612
fax 949.752.5321

Palm Springs
tel 760.323.5090

REGISTERED PROFESSIONAL ENGINEER
BERGO HOSSEINZADEH
E 22037
ELECTRICAL
STATE OF CALIFORNIA

DATE SIGNED: 1/30/24

RESTRICTIVE NOTICE

THESE DESIGNS, DRAWINGS, AND SPECIFICATIONS ARE THE EXCLUSIVE PROPERTY OF GOUVIS ENGINEERING CONSULTING GROUP. THEY ARE THE SUBJECTOF COPYRIGHT AND OTHER LEGAL PROTECTION. THEY MAY BE USED ONLY BY THEIR INTENDED RECIPIENT AND ONLY FOR THE PROJECT DEPICTED HEREIN. NO PART OF THESE DRAWINGS ARE TO BE COPIED, TRANSFERRED, REPRODUCED, NOR CAN THEY BE USED, IN WHOLE OR IN PART, BY ANY OTHER PERSON OR FOR ANY OTHER PROJECT OR STRUCTURE, WITHOUT THE PRIOR EXPRESS WRITTEN CONSENT OF GOUVIS ENGINEERING CONSULTING GROUP

© 2017 GOUVIS ENGINEERING CONSULTING GROUP INC. - ALL RIGHTS RESERVED

PROJECT:
Tenant Square

DEVELOPER:
Osito Holdings LLC

ARCHITECT:
Gary Moore & Associates

LOCATION:
Morgan Hill
Santa Clara
CA

REVISIONS

NO.	DATE	DESCRIPTION
1	02/02/23	PLAN CHECK
2	11/01/23	PLAN CHECK
3	01/30/24	FIRE COMMENT

SHEET NAME:
BUILDING "1"
LOWER, UPPER, AND
ROOF PLANS

PROJECT NUMBER:
66074

ENGINEER:

DRAFTER:

SHEET NUMBER:
E-2.1

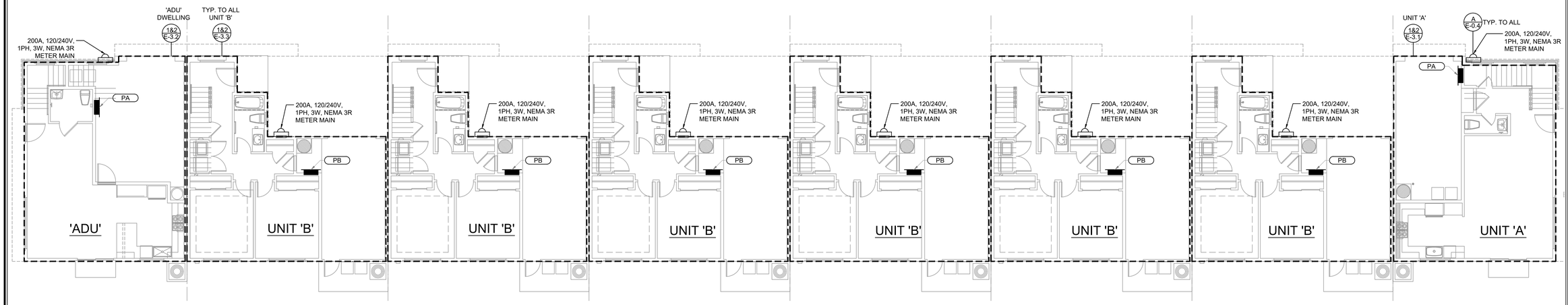

BLDG 2 - 1ST LEVEL FLOOR PLAN | 3

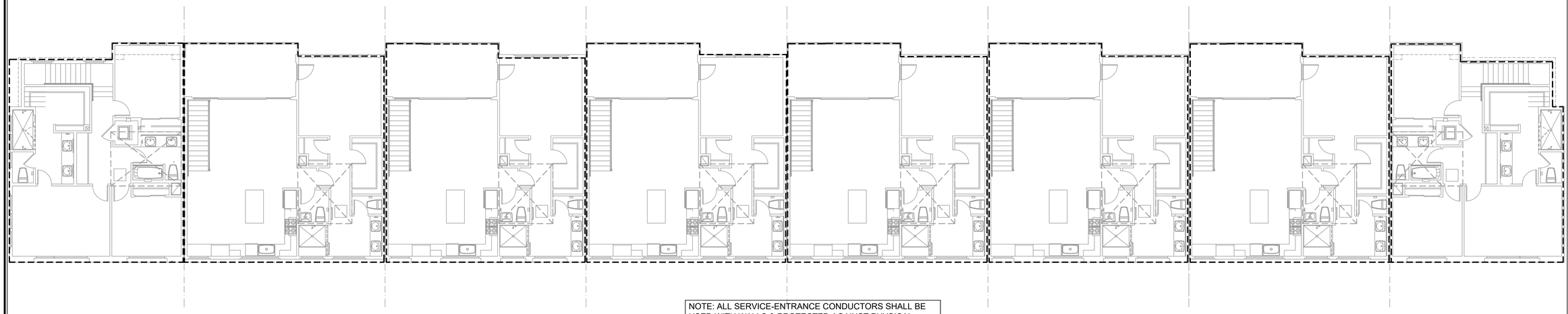

NOTE: ALL SERVICE-ENTRANCE CONDUCTORS SHALL BE USED WITH WALLS & PROTECTED AGAINST PHYSICAL DAMAGE IN COMPLIANCE WITH ALL OF THE PROVISIONS OF PART II OF ARTICLE 334 FOR NON-METALLIC SHEATHED CABLES [CEC ARCLE 338, II, (4)(a)]

BLDG 2 - 2ND LEVEL FLOOR PLAN | 2

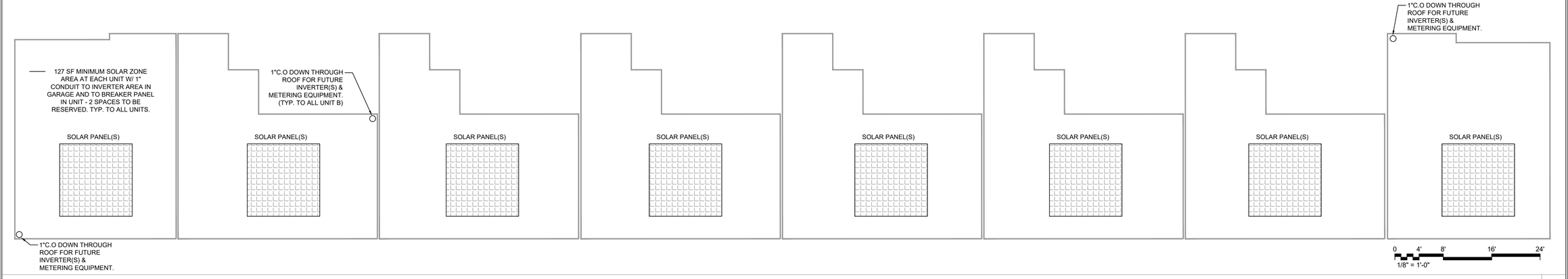

BLDG 2 - ROOF PLAN | 1

ISSUED DATE: XX/XX/XX

GOUVIS engineering consulting group, inc.®

15 Studebaker
Irvine
CA 92618

Irvine
tel 949.752.1612
fax 949.752.5321

Palm Springs
tel 760.323.5090

REGISTERED PROFESSIONAL ENGINEER
BEHZAD HOSSEINZADEH
E 22037
ELECTRICAL
STATE OF CALIFORNIA

DATE SIGNED: 1/30/24

RESTRICTIVE NOTICE

THESE DESIGNS, DRAWINGS, AND SPECIFICATIONS ARE THE EXCLUSIVE PROPERTY OF GOUVIS ENGINEERING CONSULTING GROUP. THEY ARE THE SUBJECTOF COPYRIGHT AND OTHER LEGAL PROTECTION. THEY MAY BE USED ONLY BY THEIR INTENDED RECIPIENT AND ONLY FOR THE PROJECT DEPICTED HEREIN. NO PART OF THESE DRAWINGS ARE TO BE COPIED, TRANSFERRED, REPRODUCED, NOR CAN THEY BE USED, IN WHOLE OR IN PART, BY ANY OTHER PERSON OR FOR ANY OTHER PROJECT OR STRUCTURE, WITHOUT THE PRIOR EXPRESS WRITTEN CONSENT OF GOUVIS ENGINEERING CONSULTING GROUP

© 2017 GOUVIS ENGINEERING CONSULTING GROUP INC. - ALL RIGHTS RESERVED

PROJECT:
Tenant Square

DEVELOPER:
Osito Holdings LLC

ARCHITECT:
Gary Moore & Associates

LOCATION:
Morgan Hill
Santa Clara
CA

REVISIONS

NO.	DATE	DESCRIPTION
1	02/02/23	PLAN CHECK
2	11/01/23	PLAN CHECK
3	01/30/24	FIRE COMMENT

SHEET NAME:
BUILDING "2" LOWER, UPPER, AND ROOF PLANS

PROJECT NUMBER:
66074

ENGINEER:

DRAFTER:

SHEET NUMBER:
E-2.2

LUMINAIRE SCHEDULE

MARK	LEGEND	VOLT	MOUNT	DESCRIPTION	MANUFACTURER	MODEL NUMBER	LAMPS	INPUT WATTS
A		120	RECESSED	LED DOWNLIGHT	SELECT BY OWNER	SELECT BY OWNER	LED	18
B		120	WALL	LED LIGHT	MAXIM LIGHTING	3253FSBZ	LED	60
C		120	SURFACE	LED STRIP LIGHT	SELECT BY OWNER	SELECT BY OWNER	LED	50
D		120	SURFACE	UNDER CABINET STRIP LIGHT	SELECT BY OWNER	SELECT BY OWNER	LED	5W/FT
E		120	PENDANT	LED DOWNLIGHT	SELECT BY OWNER	SELECT BY OWNER	LED	50
F		120	WALL	BATH VANITY LIGHT	SELECT BY OWNER	SELECT BY OWNER	LED	20

NOTES:

1) VERIFY WITH OWNER OR ARCHITECT BEFORE PURCHASING THE LIGHTING FIXTURES.

NOTES

1. 3/4" PLYWOOD PLATFORM
2. MIN 30" WORKING SPACE CLEARANCE IN FRONT OF CONTROL SYSTEM
3. MIN. 22"x30" ATTIC ACCESS (MAX 20" FROM UNIT)
4. MIN 24" WIDE PLYWOOD FLOOR ACCESS WAY
5. SWITCH LIGHT BY OTHERS.
6. CONVENIENCE OUTLET WITHIN 25' OF EQUIPMENT.
7. 2"x2" x1/8" ANGLE MOUNTING BRACKETS (TOTAL OF FOUR) WITH THE MAXIMUM DISTANCE OF 4" FROM THE EDGE OF THE UNIT. ATTACH BRACKETS TO FAN COIL USING NO. 10 SELF TAPPING SCREWS AND TO STUDS USING 5/8" LAG SCREWS.

IMPORTANT NOTE*
PROVIDE GUARDRAIL AROUND FAU PLATFORM FOR SAFETY.

RELATED CODES

EQUIPMENT INSTALLED IN AN ATTIC MUST BE ACCESSIBLE FOR ROUTINE INSPECTION AND MAINTENANCE BY THE OWNER/OCCUPANT AND FOR SERVICE AND REPAIR AS NEEDED. CHANGING FILTERS, LUBRICATING MOTOR AND FAN BEARINGS AND CHECKING BELT TENSION FOLLOWING A SERVICE INTERRUPTION ARE NORMAL OWNER FUNCTIONS. ADEQUATE LIGHT, AN ELECTRICAL OUTLET, SAFE ACCESS WAY AND SUFFICIENT WORKING SPACE ON THE CONTROL SIDE ALL ENCOURAGE AND FACILITATE MAINTENANCE AND ALSO ENABLE RAPID EGRESS IN AN EMERGENCY.

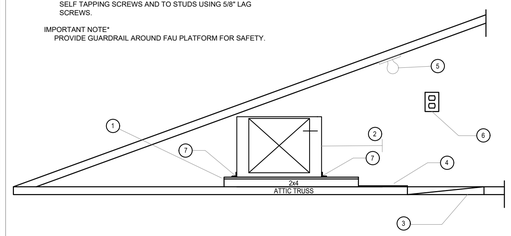

FURNACE INSTALLATION

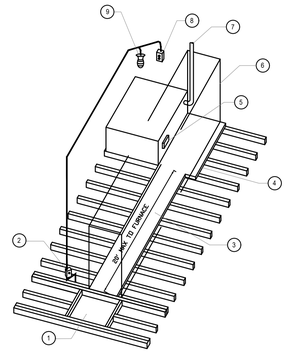

1. 22"X30" MINIMUM ATTIC OPENING
2. LIGHT SWITCH
3. SOLID FLOORING MINIMUM 24 " WIDE
4. MINIMUM 30" X30" FLOOR AREA AT REQUIRED ACCESS SIDE
5. SERVICE SIDE OF APPLIANCE
6. UNOBSTRUCTED PASSAGEWAY
7. GAS VENT
8. RECEPTACLE OUTLET
9. LIGHTING FIXTURE WITH LAMP PROTECTION CASE BY ELECTRICAL

IMPORTANT NOTE*
PROVIDE GUARDRAIL AROUND FAU PLATFORM FOR SAFETY

ATTIC FURNACE WALKWAY

GENERAL NOTES

1. PROVIDE VACANCY SENSOR/DIMMER TO ALL LUMINAIRES REQUIRED BY SECTION 150.0 OF 2019 TITLE 24 PART 6.
2. THIS DRAWING IS FOR REFERENCE ONLY. WIRE CKT 20 ON THE PLAN TO ALL DETECTORS FOR A COMPLETE AND OPERATIONAL SYSTEM. VERIFY W/LOCAL JURISDICTION FOR ALARM DETECTOR REQUIREMENT BEFORE ROUGH-IN.
3. IN DWELLING AREA SPECIFIED IN CEC 2019 SECTION 210.52; (A) WALL SPACE, (B) SMALL-APPLIANCE CIRCUIT, (C) COUNTERTOP SPACE, (D) BATHROOM AREA, (E) OUTDOORS, (F) LAUNDRY AREA, (G) GARAGE, AND (H) HALLWAYS; ALL 125-VOLT, 15- AND 20- AMPERE RECEPTACLES SHALL BE LISTED TAMPER-RESISTANT RECEPTACLES.
4. OUTLETS INSTALLED IN KITCHENS, FAMILY ROOMS, LIVING ROOMS, PARLORS, LIBRARIES, DENS, BEDROOMS, SUNROOMS, RECREATION ROOMS, CLOSETS, HALLWAYS, LAUNDRY AREAS OR SIMILAR ROOMS OR AREAS WILL BE PROTECTED BY A LISTED ARC-FAULT CIRCUIT INTERRUPTER, COMBINATION-TYPE, INSTALLED TO PROVIDE PROTECTION OF THE BRANCH CIRCUIT.
5. ALL NEW CARBON MONOXIDE ALARM ARE 120V HARD-WIRED WITH BATTERY BACKUP, INTERCONNECTED WITH OC SENSOR, AND ARE AUDIBLE IN ALL SLEEPING ROOMS.
6. ELECTRICAL CONTRACTOR MUST VERIFY MECHANICAL EQUIPMENT INFORMATION FOR MECHANICAL DRAWING BEFORE ISSUING ANY BID. NOTIFY ENGINEER IMMEDIATELY IF ANY DISCREPANCY OCCUR.
7. THE HEIGHT OF THE OUTLETS AND SWITCHES ARE NOT NOTED ON THE LEGEND OR IN THE UNIT PLANS. REFER TO "TYPICAL ELECTRICAL DEVICE HEIGHT ON E-0.3"
8. ALL DWELLING UNIT LUMINAIRES SHALL BE HIGH EFFICACY IN ACCORDANCE WITH TABLE 150.0 OF 2019 BUILDING ENERGY EFFICIENCY STANDARDS, TITLE 24 PART 6.
9. A DEDICATED 125-VOLT (V) ELECTRICAL RECEPTACLE THAT IS WITHIN 3 FEET OF THE WATER HEATER AND ACCESSIBLE TO THE WATER HEATER WITH NO OBSTRUCTIONS, AND BE CONNECTED TO A THREE CONDUCTOR, 10 AWG BRANCH CIRCUIT. IN ADDITION, THE UNUSED CONDUCTOR MUST BE LABELED AS "SPARE" AND ELECTRICALLY ISOLATED AND HAVE RESERVED CIRCUIT BREAKER SPACE.

FAN COIL IN ATTIC SPACE | 3

KEYED NOTES

1. CEILING FAN OR LIGHTING FIXTURE TO BE DETERMINED. VERIFY W/ OWNER FOR ACTUAL TO LOCATION. OUTLET BOX/SYSTEMS SHALL BE LISTED AND MARKED BY THE OEM AS SUITABLE FOR THIS PURPOSE. CEILING -SUSPENDED (PADDLE) FANS SHALL NOT WEIGH MORE THAN 70 LBS. FOR OUTLET BOX/SYSTEMS DESIGNED TO SUPPORT CEILING-SUSPENDED FANS THAT WEIGH MORE THAN 35 LBS, THE REQUIRED MARKING SHALL INCLUDE THE MAXIMUM WEIGHT TO BE SUPPORTED.
2. DENOTES THE CONTROL FOR THE CEILING FAN CONNECTED TO THE J-BOX PER NOTE #1. VERIFY W/ SUPPLIER AND PROVIDE DIMMER CONTROL IF THE LIGHTS ARE INCANDESCENT.
3. DENOTES HALF-HOT RECEPTACLE ON SWITCH LEG 'b' IN THIS AREA.
4. SPLIT CIRCUITED HALF-SWITCHED DUPLEX RECEPTACLE FOR GARBAGE DISPOSER AND DISHWASHER BELOW KITCHEN SINK. CONNECT THE SWITCHED SIDE OF THE RECEPTACLE TO A MOTOR RATED WALL SWITCH AND PROVIDE A DEDICATED CIRCUIT FOR EACH APPLIANCE WITH A COMMON TRIP DEVICE AT THE CIRCUIT BREAKER.
5. DENOTES APPROXIMATE LOCATION OF FC/FAU UNIT. VERIFY WITH MECHANICAL DRAWINGS FOR EXACT LOCATION.
6. REFRIGERATOR RECEPTACLE CONNECTED TO LINE SIDE OF KITCHEN SMALL APPLIANCE GFI PROTECTED COUNTER MOUNTED RECEPTACLE TO COMPLY WITH NEC SECTION 210.52(B)(1).
7. PROVIDE 15A/1P MOTOR RATED SWITCH FOR CONNECT TO THE EXHAUST FAN. REFER TO MECHANICAL PLAN FOR DETAIL.
8. PROVIDE GFCI PROTECTED RECEPTACLE OUTLET WITH ENCLOSURE THAT IS WEATHERPROOF (WP) WHETHER OR NOT THE ATTACHMENT PLUG CAP IS INSERTED. AN OUTLET BOX HOOD SHALL BE LISTED AND SHALL BE IDENTIFIED AS "EXTRA DUTY". RECEPTACLE SHALL BE LISTED AND SO IDENTIFIED AS WEATHER-RESISTANT (WR) TYPE.
9. PER SECTION 150.0(K)(3) ALL OUTDOOR LIGHTING SHALL BE HIGH EFFICACY AND CONTROLLED BY MANUAL ON/OFF SWITCH AND ONE OF THE CHOICES BELOW:
   1. PHOTOCELL AND MOTION SENSOR
   2. PHOTOCELL AND AUTOMATIC TIME SWITCH
   3. ASTRONOMIC TIME CLOCK
10. PROVIDE 1"C TO ACCOMMODATE A DEDICATED 240V "EV CAPABLE". THE PANEL SHALL PROVIDE THE CAPACITY TO INSTALL A 40-AMPERE MINIMUM. THE INSTALLATION OF "EV CAPABLE", INCLUDES THE WIRING, CIRCUIT BREAKER SIZE, CONFIGURATION OF RECEPTACLE, AND FINAL TERMINATION SHOULD BE PROVIDED BY THE CONTRACTOR.
11. DENOTES GARAGE DOOR OPENER CONTROLLER.
12. DENOTES CEILING MOUNTED RECEPTACLES FOR GARAGE DOOR OPENER ON THE SWITCH LEG AS SHOWN.
13. PROVIDE POWER, LIGHTING, AND OCCUPANCY SENSOR TO ATTIC SPACE.
14. CHIME UNIT WITH INTERGRAL TRANSFORMER MOUNTED AT +7'-0" A.F.F. TO BOTTOM OF CHIME.
15. PROVIDE 15A/2P MOTOR RATED SWITCH FOR CONNECTION TO THE FC.
16. DINING RECEPTACLE CONNECTED TO LINE SIDE OF KITCHEN SMALL APPLIANCE GFI PROTECTED COUNTER MOUNTED RECEPTACLE TO COMPLY WITH NEC SECTION 210.52(B)(1).
17. LIGHTED ADDRESS SIGN @ 5'-0" ABOVE FINISH GRADE.
18. LOCATION OF FUTURE INVERTERS & METERING EQUIPMENT WITH 1" MIN CONDUIT TO ROOF & UNIT PANEL

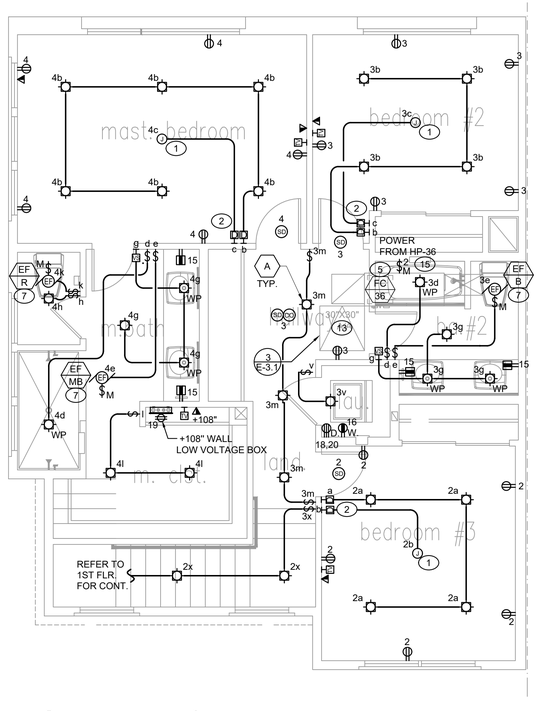

0 2' 4' 8' 12'
1/4" = 1'-0"

SECOND FLOOR PLAN | 2

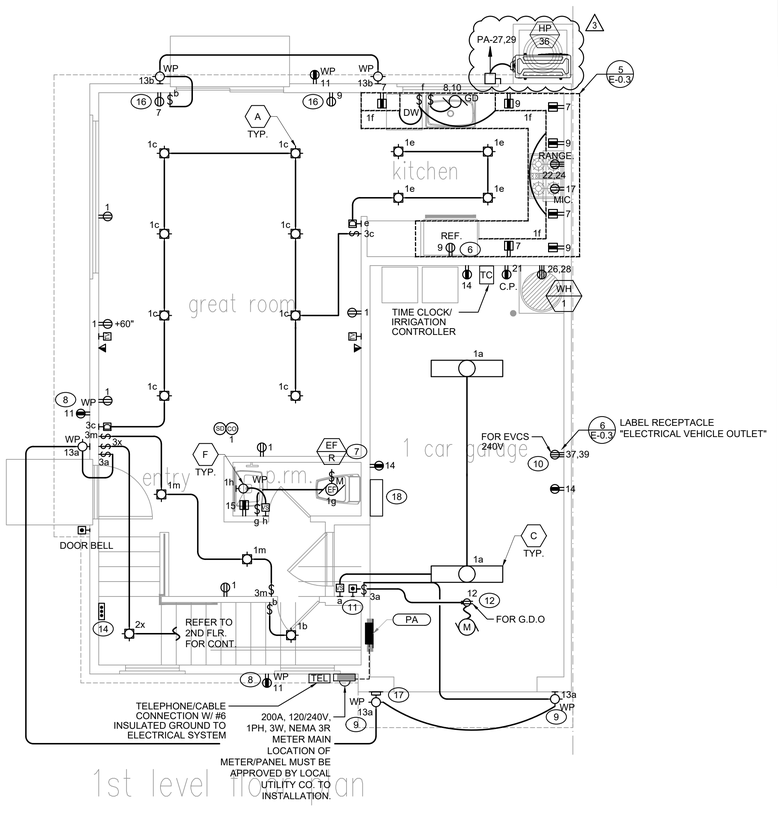

0 2' 4' 8' 12'
1/4" = 1'-0"

FIRST FLOOR PLAN | 1

GOUVIS engineering consulting group, inc.

15 Studebaker
Irvine
CA 92618

Irvine
tel 949.752.1612
fax 949.752.5321

Palm Springs
tel 760.323.5090

REGISTERED PROFESSIONAL ENGINEER
BEHZAD HOSSEINZADEH
E 22037
ELECTRICAL
STATE OF CALIFORNIA

DATE SIGNED: 1/30/24

RESTRICTIVE NOTICE

THESE DESIGNS, DRAWINGS, AND SPECIFICATIONS ARE THE EXCLUSIVE PROPERTY OF GOUVIS ENGINEERING CONSULTING GROUP. THEY ARE THE SUBJECTOF COPYRIGHT AND OTHER LEGAL PROTECTION. THEY MAY BE USED ONLY BY THEIR INTENDED RECIPIENT AND ONLY FOR THE PROJECT DEPICTED HEREIN. NO PART OF THESE DRAWINGS ARE TO BE COPIED, TRANSFERRED, REPRODUCED, NOR CAN THEY BE USED, IN WHOLE OR IN PART, BY ANY OTHER PERSON OR FOR ANY OTHER PROJECT OR STRUCTURE, WITHOUT THE PRIOR EXPRESS WRITTEN CONSENT OF GOUVIS ENGINEERING CONSULTING GROUP

© 2017 GOUVIS ENGINEERING CONSULTING GROUP INC. - ALL RIGHTS RESERVED

PROJECT:
Tenant Square

DEVELOPER:
Osito Holdings LLC

ARCHITECT:
Gary Moore & Associates

LOCATION:
Morgan Hill
Santa Clara
CA

REVISIONS

NO.	DATE	DESCRIPTION
1	02/02/23	PLAN CHECK
2	11/01/23	PLAN CHECK
3	01/30/24	FIRE COMMENT

SHEET NAME:
UNIT A

PROJECT NUMBER:
66074

ENGINEER:

DRAFTER:

SHEET NUMBER:
E-3.1

ISSUED DATE: XX/XX/XX

LUMINAIRE SCHEDULE

MARK	LEGEND	VOLT	MOUNT	DESCRIPTION	MANUFACTURER	MODEL NUMBER	LAMPS	INPUT WATTS
A		120	RECESSED	LED DOWNLIGHT	SELECT BY OWNER	SELECT BY OWNER	LED	18
B		120	WALL	LED LIGHT	MAXIM LIGHTING	3253FSBZ	LED	60
C		120	SURFACE	LED STRIP LIGHT	SELECT BY OWNER	SELECT BY OWNER	LED	50
D		120	SURFACE	UNDER CABINET STRIP LIGHT	SELECT BY OWNER	SELECT BY OWNER	LED	5W/FT
E		120	PENDANT	LED DOWNLIGHT	SELECT BY OWNER	SELECT BY OWNER	LED	50
F		120	WALL	BATH VANITY LIGHT	SELECT BY OWNER	SELECT BY OWNER	LED	20

NOTES:

1) VERIFY WITH OWNER OR ARCHITECT BEFORE PURCHASING THE LIGHTING FIXTURES.

NOTES

1. 3/4" PLYWOOD PLATFORM
2. MIN 30" WORKING SPACE CLEARANCE IN FRONT OF CONTROL SYSTEM
3. MIN. 22"x30" ATTIC ACCESS (MAX 20" FROM UNIT)
4. MIN 24" WIDE PLYWOOD FLOOR ACCESS WAY
5. SWITCH LIGHT BY OTHERS.
6. CONVENIENCE OUTLET WITHIN 25' OF EQUIPMENT.
7. 2"x2" x1/8" ANGLE MOUNTING BRACKETS (TOTAL OF FOUR) WITH THE MAXIMUM DISTANCE OF 4" FROM THE EDGE OF THE UNIT. ATTACH BRACKETS TO FAN COIL USING NO. 10 SELF TAPPING SCREWS AND TO STUDS USING 5/8" LAG SCREWS.

IMPORTANT NOTE*
PROVIDE GUARDRAIL AROUND FAU PLATFORM FOR SAFETY.

RELATED CODES

EQUIPMENT INSTALLED IN AN ATTIC MUST BE ACCESSIBLE FOR ROUTINE INSPECTION AND MAINTENANCE BY THE OWNER/OCCUPANT AND FOR SERVICE AND REPAIR AS NEEDED. CHANGING FILTERS, LUBRICATING MOTOR AND FAN BEARINGS AND CHECKING BELT TENSION FOLLOWING A SERVICE INTERRUPTION ARE NORMAL OWNER FUNCTIONS. ADEQUATE LIGHT, AN ELECTRICAL OUTLET, SAFE ACCESS WAY AND SUFFICIENT WORKING SPACE ON THE CONTROL SIDE ALL ENCOURAGE AND FACILITATE MAINTENANCE AND ALSO ENABLE RAPID EGRESS IN AN EMERGENCY.

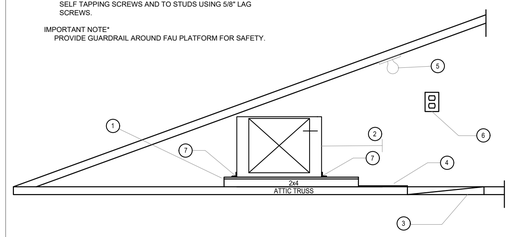

FURNACE INSTALLATION

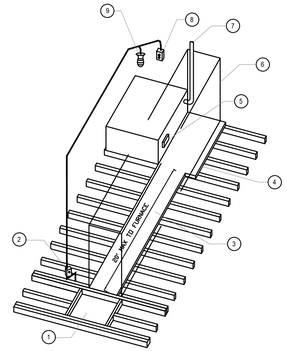

1. 22"X30" MINIMUM ATTIC OPENING
2. LIGHT SWITCH
3. SOLID FLOORING MINIMUM 24 " WIDE
4. MINIMUM 30" X30" FLOOR AREA AT REQUIRED ACCESS SIDE
5. SERVICE SIDE OF APPLIANCE
6. UNOBSTRUCTED PASSAGEWAY
7. GAS VENT
8. RECEPTACLE OUTLET
9. LIGHTING FIXTURE WITH LAMP PROTECTION CASE BY ELECTRICAL

IMPORTANT NOTE*
PROVIDE GUARDRAIL AROUND FAU PLATFORM FOR SAFETY

ATTIC FURNACE WALKWAY

GENERAL NOTES

1. PROVIDE VACANCY SENSOR/DIMMER TO ALL LUMINAIRES REQUIRED BY SECTION 150.0 OF 2019 TITLE 24 PART 6.
2. THIS DRAWING IS FOR REFERENCE ONLY. WIRE CKT 20 ON THE PLAN TO ALL DETECTORS FOR A COMPLETE AND OPERATIONAL SYSTEM. VERIFY W/LOCAL JURISDICTION FOR ALARM DETECTOR REQUIREMENT BEFORE ROUGH-IN.
3. IN DWELLING AREA SPECIFIED IN CEC 2019 SECTION 210.52; (A) WALL SPACE, (B) SMALL-APPLIANCE CIRCUIT, (C) COUNTERTOP SPACE, (D) BATHROOM AREA, (E) OUTDOORS, (F) LAUNDRY AREA, (G) GARAGE, AND (H) HALLWAYS; ALL 125-VOLT, 15- AND 20- AMPERE RECEPTACLES SHALL BE LISTED TAMPER-RESISTANT RECEPTACLES.
4. OUTLETS INSTALLED IN KITCHENS, FAMILY ROOMS, LIVING ROOMS, PARLORS, LIBRARIES, DENS, BEDROOMS, SUNROOMS, RECREATION ROOMS, CLOSETS, HALLWAYS, LAUNDRY AREAS OR SIMILAR ROOMS OR AREAS WILL BE PROTECTED BY A LISTED ARC-FAULT CIRCUIT INTERRUPTER, COMBINATION-TYPE, INSTALLED TO PROVIDE PROTECTION OF THE BRANCH CIRCUIT.
5. ALL NEW CARBON MONOXIDE ALARM ARE 120V HARD-WIRED WITH BATTERY BACKUP, INTERCONNECTED WITH OC SENSOR, AND ARE AUDIBLE IN ALL SLEEPING ROOMS.
6. ELECTRICAL CONTRACTOR MUST VERIFY MECHANICAL EQUIPMENT INFORMATION FOR MECHANICAL DRAWING BEFORE ISSUING ANY BID. NOTIFY ENGINEER IMMEDIATELY IF ANY DISCREPANCY OCCUR.
7. THE HEIGHT OF THE OUTLETS AND SWITCHES ARE NOT NOTED ON THE LEGEND OR IN THE UNIT PLANS. REFER TO "TYPICAL ELECTRICAL DEVICE HEIGHT ON E-0.3"
8. ALL DWELLING UNIT LUMINAIRES SHALL BE HIGH EFFICACY IN ACCORDANCE WITH TABLE 150.0 OF 2019 BUILDING ENERGY EFFICIENCY STANDARDS, TITLE 24 PART 6.
9. A DEDICATED 125-VOLT (V) ELECTRICAL RECEPTACLE THAT IS WITHIN 3 FEET OF THE WATER HEATER AND ACCESSIBLE TO THE WATER HEATER WITH NO OBSTRUCTIONS, AND BE CONNECTED TO A THREE CONDUCTOR, 10 AWG BRANCH CIRCUIT. IN ADDITION, THE UNUSED CONDUCTOR MUST BE LABELED AS "SPARE" AND ELECTRICALLY ISOLATED AND HAVE RESERVED CIRCUIT BREAKER SPACE.

FAN COIL IN ATTIC SPACE | 3

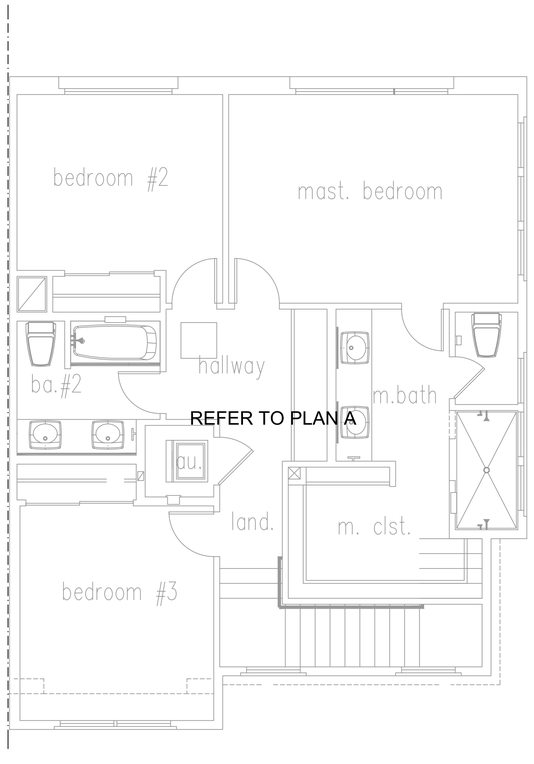

SECOND FLOOR PLAN | 2

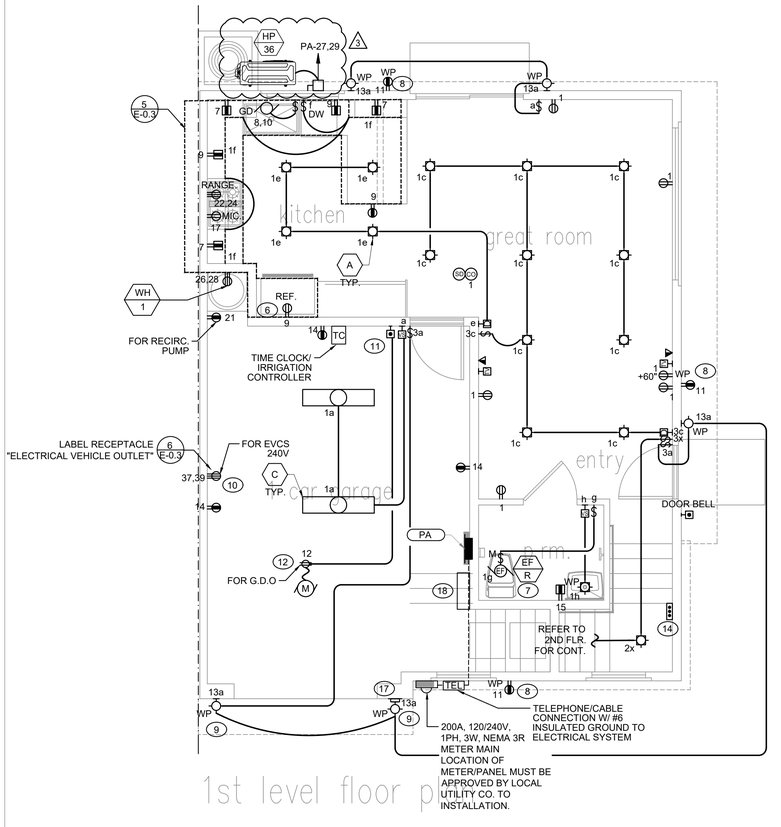

FIRST FLOOR PLAN | 1

KEYED NOTES

1. CEILING FAN OR LIGHTING FIXTURE TO BE DETERMINED. VERIFY W/ OWNER FOR ACTUAL TO LOCATION. OUTLET BOX/SYSTEMS SHALL BE LISTED AND MARKED BY THE OEM AS SUITABLE FOR THIS PURPOSE. CEILING -SUSPENDED (PADDLE) FANS SHALL NOT WEIGH MORE THAN 70 LBS. FOR OUTLET BOX/SYSTEMS DESIGNED TO SUPPORT CEILING-SUSPENDED FANS THAT WEIGH MORE THAN 35 LBS, THE REQUIRED MARKING SHALL INCLUDE THE MAXIMUM WEIGHT TO BE SUPPORTED.
2. DENOTES THE CONTROL FOR THE CEILING FAN CONNECTED TO THE J-BOX PER NOTE #1. VERIFY W/ SUPPLIER AND PROVIDE DIMMER CONTROL IF THE LIGHTS ARE INCANDESCENT.
3. DENOTES HALF-HOT RECEPTACLE ON SWITCH LEG 'b' IN THIS AREA.
4. SPLIT CIRCUITED HALF-SWITCHED DUPLEX RECEPTACLE FOR GARBAGE DISPOSER AND DISHWASHER BELOW KITCHEN SINK. CONNECT THE SWITCHED SIDE OF THE RECEPTACLE TO A MOTOR RATED WALL SWITCH AND PROVIDE A DEDICATED CIRCUIT FOR EACH APPLIANCE WITH A COMMON TRIP DEVICE AT THE CIRCUIT BREAKER.
5. DENOTES APPROXIMATE LOCATION OF FC/FAU UNIT. VERIFY WITH MECHANICAL DRAWINGS FOR EXACT LOCATION.
6. REFRIGERATOR RECEPTACLE CONNECTED TO LINE SIDE OF KITCHEN SMALL APPLIANCE GFI PROTECTED COUNTER MOUNTED RECEPTACLE TO COMPLY WITH NEC SECTION 210.52(B)(1).
7. PROVIDE 15A/1P MOTOR RATED SWITCH FOR CONNECT TO THE EXHAUST FAN. REFER TO MECHANICAL PLAN FOR DETAIL.
8. PROVIDE GFCI PROTECTED RECEPTACLE OUTLET WITH ENCLOSURE THAT IS WEATHERPROOF (WP) WHETHER OR NOT THE ATTACHMENT PLUG CAP IS INSERTED. AN OUTLET BOX HOOD SHALL BE LISTED AND SHALL BE IDENTIFIED AS "EXTRA DUTY". RECEPTACLE SHALL BE LISTED AND SO IDENTIFIED AS WEATHER-RESISTANT (WR) TYPE.
9. PER SECTION 150.0(K)(3) ALL OUTDOOR LIGHTING SHALL BE HIGH EFFICACY AND CONTROLLED BY MANUAL ON/OFF SWITCH AND ONE OF THE CHOICES BELOW:
   1. PHOTOCELL AND MOTION SENSOR
   2. PHOTOCELL AND AUTOMATIC TIME SWITCH
   3. ASTRONOMIC TIME CLOCK
10. PROVIDE 1"C TO ACCOMMODATE A DEDICATED 240V "EV CAPABLE". THE PANEL SHALL PROVIDE THE CAPACITY TO INSTALL A 40-AMPERE MINIMUM. THE INSTALLATION OF "EV CAPABLE", INCLUDES THE WIRING, CIRCUIT BREAKER SIZE, CONFIGURATION OF RECEPTACLE, AND FINAL TERMINATION SHOULD BE PROVIDED BY THE CONTRACTOR.
11. DENOTES GARAGE DOOR OPENER CONTROLLER.
12. DENOTES CEILING MOUNTED RECEPTACLES FOR GARAGE DOOR OPENER ON THE SWITCH LEG AS SHOWN.
13. PROVIDE POWER, LIGHTING, AND OCCUPANCY SENSOR TO ATTIC SPACE.
14. CHIME UNIT WITH INTERGRAL TRANSFORMER MOUNTED AT +7'-0" A.F.F. TO BOTTOM OF CHIME.
15. PROVIDE 15A/2P MOTOR RATED SWITCH FOR CONNECTION TO THE FC.
16. DINING RECEPTACLE CONNECTED TO LINE SIDE OF KITCHEN SMALL APPLIANCE GFI PROTECTED COUNTER MOUNTED RECEPTACLE TO COMPLY WITH NEC SECTION 210.52(B)(1).
17. LIGHTED ADDRESS SIGN @ 5'-0" ABOVE FINISH GRADE.
18. LOCATION OF FUTURE INVERTERS & METERING EQUIPMENT WITH 1" MIN CONDUIT TO ROOF & UNIT PANEL

GOUVIS engineering consulting group, inc.®
15 Studebaker
Irvine
CA 92618

Irvine
tel 949.752.1612
fax 949.752.5321

Palm Springs
tel 760.323.5090

REGISTERED PROFESSIONAL ENGINEER
BEHZAD HOSSEINIZADEH
E 22037
ELECTRICAL
STATE OF CALIFORNIA

DATE SIGNED: 1/30/24

RESTRICTIVE NOTICE

THESE DESIGNS, DRAWINGS, AND SPECIFICATIONS ARE THE EXCLUSIVE PROPERTY OF GOUVIS ENGINEERING CONSULTING GROUP. THEY ARE THE SUBJECTOF COPYRIGHT AND OTHER LEGAL PROTECTION. THEY MAY BE USED ONLY BY THEIR INTENDED RECIPIENT AND ONLY FOR THE PROJECT DEPICTED HEREIN. NO PART OF THESE DRAWINGS ARE TO BE COPIED, TRANSFERRED, REPRODUCED, NOR CAN THEY BE USED, IN WHOLE OR IN PART, BY ANY OTHER PERSON OR FOR ANY OTHER PROJECT OR STRUCTURE, WITHOUT THE PRIOR EXPRESS WRITTEN CONSENT OF GOUVIS ENGINEERING CONSULTING GROUP

© 2017 GOUVIS ENGINEERING CONSULTING GROUP INC. - ALL RIGHTS RESERVED

PROJECT:
Tenant Square

DEVELOPER:
Osito Holdings LLC

ARCHITECT:
Gary Moore & Associates

LOCATION:
Morgan Hill
Santa Clara
CA

REVISIONS

NO.	DATE	DESCRIPTION
1	02/02/23	PLAN CHECK
2	11/01/23	PLAN CHECK
3	01/30/24	FIRE COMMENT

SHEET NAME:
UNIT A - ADU

PROJECT NUMBER:
66074

ENGINEER:

DRAFTER:

SHEET NUMBER:
E-3.2

ISSUED DATE: XX/XX/XX

LUMINAIRE SCHEDULE

MARK	LEGEND	VOLT	MOUNT	DESCRIPTION	MANUFACTURER	MODEL NUMBER	LAMPS	INPUT WATTS
A		120	RECESSED	LED DOWNLIGHT	SELECT BY OWNER	SELECT BY OWNER	LED	18
B		120	WALL	LED LIGHT	MAXIM LIGHTING	3253FSBZ	LED	60
C		120	SURFACE	LED STRIP LIGHT	SELECT BY OWNER	SELECT BY OWNER	LED	50
D		120	SURFACE	UNDER CABINET STRIP LIGHT	SELECT BY OWNER	SELECT BY OWNER	LED	5W/FT
E		120	PENDANT	LED DOWNLIGHT	SELECT BY OWNER	SELECT BY OWNER	LED	50
F		120	WALL	BATH VANITY LIGHT	SELECT BY OWNER	SELECT BY OWNER	LED	20

NOTES:

1) VERIFY WITH OWNER OR ARCHITECT BEFORE PURCHASING THE LIGHTING FIXTURES.

NOTES

1. 3/4" PLYWOOD PLATFORM
2. MIN 30" WORKING SPACE CLEARANCE IN FRONT OF CONTROL SYSTEM
3. MIN. 22"x30" ATTIC ACCESS (MAX 20' FROM UNIT)
4. MIN 24" WIDE PLYWOOD FLOOR ACCESS WAY
5. SWITCH LIGHT BY OTHERS.
6. CONVENIENCE OUTLET WITHIN 25' OF EQUIPMENT.
7. 2"x2" x1/8" ANGLE MOUNTING BRACKETS (TOTAL OF FOUR) WITH THE MAXIMUM DISTANCE OF 4" FROM THE EDGE OF THE UNIT. ATTACH BRACKETS TO FAN COIL USING NO. 10 SELF TAPPING SCREWS AND TO STUDS USING 5/8" LAG SCREWS.

IMPORTANT NOTE*
PROVIDE GUARDRAIL AROUND FAU PLATFORM FOR SAFETY.

RELATED CODES

EQUIPMENT INSTALLED IN AN ATTIC MUST BE ACCESSIBLE FOR ROUTINE INSPECTION AND MAINTENANCE BY THE OWNER/OCCUPANT AND FOR SERVICE AND REPAIR AS NEEDED. CHANGING FILTERS, LUBRICATING MOTOR AND FAN BEARINGS AND CHEKCKING BELT TENSION FOLLOWING A SERVICE INTERRUPTION ARE NORMAL OWNER FUNCTIONS.
ADEQUATE LIGHT, AN ELECTRICAL OUTLET, SAFE ACCESS WAY AND SUFFICIENT WORKING SPACE ON THE CONTROL SIDE ALL ENCOURAGE AND FACILITATE MAINTENANCE AND ALSO ENABLE RAPID EGRESS IN AN EMERGENCY.

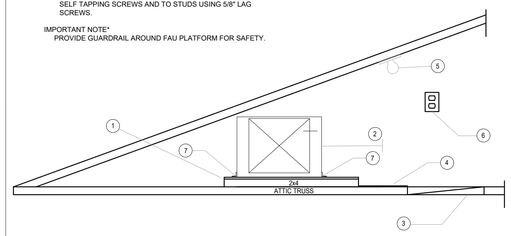

FURNACE INSTALLATION

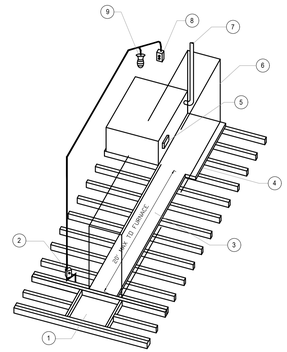

1. 22"X30" MINIMUM ATTIC OPENING
2. LIGHT SWITCH
3. SOLID FLOORING MINIMUM 24 " WIDE
4. MINIMUM 30" X30" FLOOR AREA AT REQUIRED ACCESS SIDE
5. SERVICE SIDE OF APPLIANCE
6. UNOBSTRUCTED PASSAGEWAY
7. GAS VENT
8. RECEPTACLE OUTLET
9. LIGHTING FIXTURE WITH LAMP PROTECTION CASE BY ELECTRICAL

IMPORTANT NOTE*
PROVIDE GUARDRAIL AROUND FAU PLATFORM FOR SAFETY

ATTIC FURNACE WALKWAY

GENERAL NOTES

1. PROVIDE VACANCY SENSOR/DIMMER TO ALL LUMINAIRES REQUIRED BY SECTION 150.0 OF 2019 TITLE 24 PART 6.
2. THIS DRAWING IS FOR REFERENCE ONLY. WIRE CKT 20 ON THE PLAN TO ALL DETECTORS FOR A COMPLETE AND OPERATIONAL SYSTEM. VERIFY W/LOCAL JURISDICTION FOR ALARM DETECTOR REQUIREMENT BEFORE ROUGH-IN.
3. IN DWELLING AREA SPECIFIED IN CEC 2019 SECTION 210.52; (A) WALL SPACE, (B) SMALL-APPLIANCE CIRCUIT, (C) COUNTERTOP SPACE, (D) BATHROOM AREA, (E) OUTDOORS, (F) LAUNDRY AREA, (G) GARAGE, AND (H) HALLWAYS; ALL 125-VOLT, 15- AND 20- AMPERE RECEPTACLES SHALL BE LISTED TAMPER-RESISTANT RECEPTACLES.
4. OUTLETS INSTALLED IN KITCHENS, FAMILY ROOMS, LIVING ROOMS, PARLORS, LIBRARIES, DENS, BEDROOMS, SUNROOMS, RECREATION ROOMS, CLOSETS, HALLWAYS, LAUNDRY AREAS OR SIMILAR ROOMS OR AREAS WILL BE PROTECTED BY A LISTED ARC-FAULT CIRCUIT INTERRUPTER, COMBINATION-TYPE, INSTALLED TO PROVIDE PROTECTION OF THE BRANCH CIRCUIT.
5. ALL NEW CARBON MONOXIDE ALARM ARE 120V HARD-WIRED WITH BATTERY BACKUP, INTERCONNECTED WITH OC SENSOR, AND ARE AUDIBLE IN ALL SLEEPING ROOMS.
6. ELECTRICAL CONTRACTOR MUST VERIFY MECHANICAL EQUIPMENT INFORMATION FOR MECHANICAL DRAWING BEFORE ISSUING ANY BID. NOTIFY ENGINEER IMMEDIATELY IF ANY DISCREPANCY OCCURS.
7. THE HEIGHT OF THE OUTLETS AND SWITCHES ARE NOT NOTED ON THE LEGEND OR IN THE UNIT PLANS. REFER TO "TYPICAL ELECTRICAL DEVICE HEIGHT ON E-0.3"
8. ALL DWELLING UNIT LUMINAIRES SHALL BE HIGH EFFICACY IN ACCORDANCE WITH TABLE 150.0 OF 2019 BUILDING ENERGY EFFICIENCY STANDARDS, TITLE 24 PART 6.
9. A DEDICATED 125-VOLT (V) ELECTRICAL RECEPTACLE THAT IS WITHIN 3 FEET OF THE WATER HEATER AND ACCESSIBLE TO THE WATER HEATER WITH NO OBSTRUCTIONS, AND BE CONNECTED TO A THREE CONDUCTOR, 10 AWG BRANCH CIRCUIT. IN ADDITION, THE UNUSED CONDUCTOR MUST BE LABELED AS "SPARE" AND ELECTRICALLY ISOLATED AND HAVE RESERVED CIRCUIT BREAKER SPACE.

KEYED NOTES

1. CEILING FAN OR LIGHTING FIXTURE TO BE DETERMINED. VERIFY W/ OWNER FOR ACTUAL TO LOCATION. OUTLET BOX/SYSTEMS SHALL BE LISTED AND MARKED BY THE OEM AS SUITABLE FOR THIS PURPOSE. CEILING -SUSPENDED (PADDLE) FANS SHALL NOT WEIGH MORE THAN 70 LBS. FOR OUTLET BOX/SYSTEMS DESIGNED TO SUPPORT CEILING-SUSPENDED FANS THAT WEIGH MORE THAN 35 LBS, THE REQUIRED MARKING SHALL INCLUDE THE MAXIMUM WEIGHT TO BE SUPPORTED.
2. DENOTES THE CONTROL FOR THE CEILING FAN CONNECTED TO THE J-BOX PER NOTE #1. VERIFY W/ SUPPLIER AND PROVIDE DIMMER CONTROL IF THE LIGHTS ARE INCANDESCENT.
3. DENOTES HALF-HOT RECEPTACLE ON SWITCH LEG 'b' IN THIS AREA.
4. SPLIT CIRCUITED HALF-SWITCHED DUPLEX RECEPTACLE FOR GARBAGE DISPOSER AND DISHWASHER BELOW KITCHEN SINK. CONNECT THE SWITCHED SIDE OF THE RECEPTACLE TO A MOTOR RATED WALL SWITCH AND PROVIDE A DEDICATED CIRCUIT FOR EACH APPLIANCE WITH A COMMON TRIP DEVICE AT THE CIRCUIT BREAKER.
5. DENOTES APPROXIMATE LOCATION OF FC/FAU UNIT. VERIFY WITH MECHANICAL DRAWINGS FOR EXACT LOCATION.
6. REFRIGERATOR RECEPTACLE CONNECTED TO LINE SIDE OF KITCHEN SMALL APPLIANCE GFI PROTECTED COUNTER MOUNTED RECEPTACLE TO COMPLY WITH NEC SECTION 210.52(B)(1).
7. PROVIDE 15A/1P MOTOR RATED SWITCH FOR CONNECT TO THE EXHAUST FAN. REFER TO MECHANICAL PLAN FOR DETAIL.
8. PROVIDE GFCI PROTECTED RECEPTACLE OUTLET WITH ENCLOSURE THAT IS WEATHERPROOF (WP) WHETHER OR NOT THE ATTACHMENT PLUG CAP IS INSERTED. AN OUTLET BOX HOOD SHALL BE LISTED AND SHALL BE IDENTIFIED AS "EXTRA DUTY". RECEPTACLE SHALL BE LISTED AND SO IDENTIFIED AS WEATHER-RESISTANT (WR) TYPE.
9. PER SECTION 150.0(K)(3) ALL OUTDOOR LIGHTING SHALL BE HIGH EFFICACY AND CONTROLLED BY MANUAL ON/OFF SWITCH AND ONE OF THE CHOICES BELOW:
   1. PHOTOCELL AND MOTION SENSOR
   2. PHOTOCELL AND AUTOMATIC TIME SWITCH
   3. ASTRONOMIC TIME CLOCK
10. PROVIDE 1"C TO ACCOMMODATE A DEDICATED 240V "EV CAPABLE". THE PANEL SHALL PROVIDE THE CAPACITY TO INSTALL A 40-AMPERE MINIMUM. THE INSTALLATION OF "EV CAPABLE", INCLUDES THE WIRING, CIRCUIT BREAKER SIZE, CONFIGURATION OF RECEPTACLE, AND FINAL TERMINATION SHOULD BE PROVIDED BY THE CONTRACTOR.
11. DENOTES GARAGE DOOR OPENER CONTROLLER.
12. DENOTES CEILING MOUNTED RECEPTACLES FOR GARAGE DOOR OPENER ON THE SWITCH LEG AS SHOWN.
13. PROVIDE POWER, LIGHTING, AND OCCUPANCY SENSOR TO ATTIC SPACE.
14. CHIME UNIT WITH INTERGRAL TRANSFORMER MOUNTED AT +7'-0" A.F.F. TO BOTTOM OF CHIME.
15. PROVIDE 15A/2P MOTOR RATED SWITCH FOR CONNECTION TO THE FC.
16. DINING RECEPTACLE CONNECTED TO LINE SIDE OF KITCHEN SMALL APPLIANCE GFI PROTECTED COUNTER MOUNTED RECEPTACLE TO COMPLY WITH NEC SECTION 210.52(B)(1).
17. LIGHTED ADDRESS SIGN @ 5'-0" ABOVE FINISH GRADE.
18. LOCATION OF FUTURE INVERTERS & METERING EQUIPMENT WITH 1" MIN CONDUIT TO ROOF & UNIT PANEL

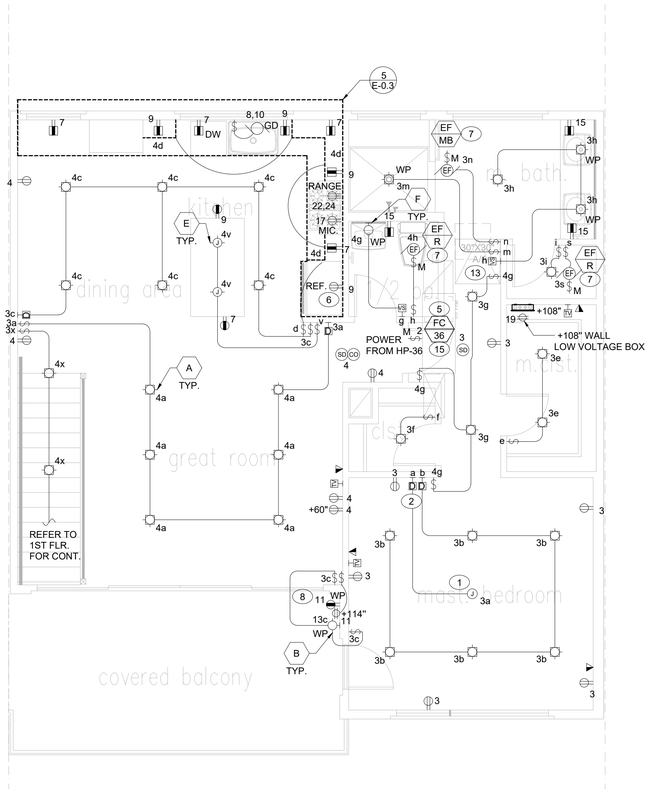

0 2' 4' 8' 12'
1/4" = 1'-0"

SECOND FLOOR PLAN | 2

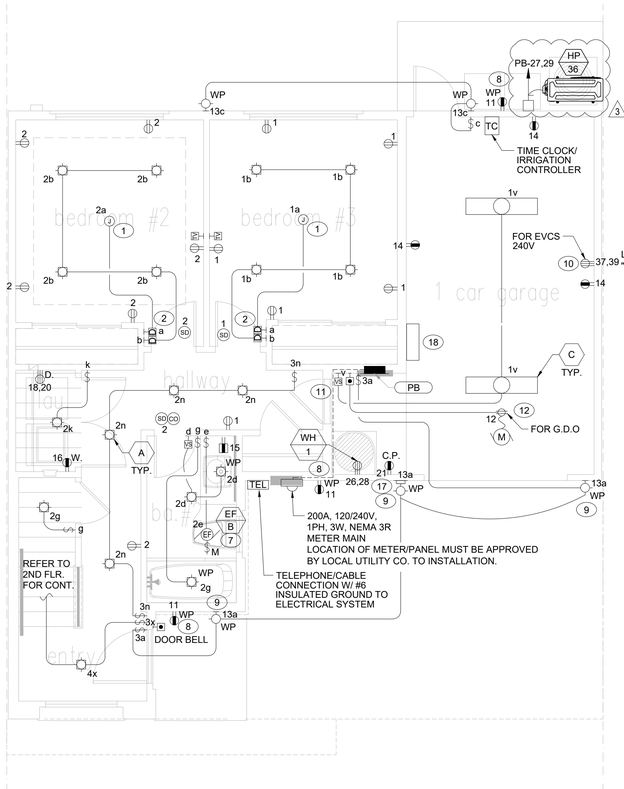

0 2' 4' 8' 12'
1/4" = 1'-0"

FIRST FLOOR PLAN | 1

FAN COIL IN ATTIC SPACE | 3

GOUVIS engineering consulting group, inc.

15 Studebaker
Irvine
CA 92618

Irvine
tel 949.752.1612
fax 949.752.5321

Palm Springs
tel 760.323.5090

REGISTERED PROFESSIONAL ENGINEER
BEIGO HOSSEINZADEH
E 22037
ELECTRICAL
STATE OF CALIFORNIA

DATE SIGNED: 1/30/24

RESTRICTIVE NOTICE

THESE DESIGNS, DRAWINGS, AND SPECIFICATIONS ARE THE EXCLUSIVE PROPERTY OF GOUVIS ENGINEERING CONSULTING GROUP. THEY ARE THE SUBJECTOF COPYRIGHT AND OTHER LEGAL PROTECTION. THEY MAY BE USED ONLY BY THEIR INTENDED RECIPIENT AND ONLY FOR THE PROJECT DEPICTED HEREIN. NO PART OF THESE DRAWINGS ARE TO BE COPIED, TRANSFERRED, REPRODUCED, NOR CAN THEY BE USED, IN WHOLE OR IN PART, BY ANY OTHER PERSON OR FOR ANY OTHER PROJECT OR STRUCTURE, WITHOUT THE PRIOR EXPRESS WRITTEN CONSENT OF GOUVIS ENGINEERING CONSULTING GROUP

© 2017 GOUVIS ENGINEERING CONSULTING GROUP INC. - ALL RIGHTS RESERVED

PROJECT:
Tenant Square

DEVELOPER:
Osito Holdings LLC

ARCHITECT:
Gary Moore & Associates

LOCATION:
Morgan Hill
Santa Clara
CA

REVISIONS

NO.	DATE	DESCRIPTION
1	02/02/23	PLAN CHECK
2	11/01/23	PLAN CHECK
3	01/30/24	FIRE COMMENT

SHEET NAME:
UNIT B

PROJECT NUMBER:
66074

ENGINEER:

DRAFTER:

SHEET NUMBER:
E-3.3

ISSUED DATE: XX/XX/XX

GENERAL NOTES

A. GENERAL

1. MECHANICAL SYSTEMS SHALL BE INSTALLED IN ACCORDANCE WITH THE CALIFORNIA MECHANICAL CODE (CMC) AND ALL APPLICABLE LOCAL CODES AND REGULATIONS WITH AMENDMENTS (LATEST EDITION).
2. ALL DIMENSIONS SHOWN ON THESE PLANS ARE APPROXIMATE AND MUST BE CONFIRMED ON SITE.
3. PROVIDE ANCHORAGE FOR ALL PIPING, DUCTWORK, AND EQUIPMENT IN ACCORDANCE WITH THE LATEST EDITION OF GUIDELINES FOR SEISMIC RESTRAINTS OF MECHANICAL SYSTEMS AND PLUMBING PIPING SYSTEMS PER SMACNA.
4. VENTILATION SYSTEMS DESIGNED AND INSTALLED SHALL MEET ASHRAE 62.2 REQUIREMENTS.
5. WHERE DEEMED ARCHITECTURALLY UNACCEPTABLE TO PROVIDE ADEQUATE DOOR UNDERCUT FOR PROPER AIR RETURN BETWEEN ROOMS, TRANSFER GRILLS SHALL BE INSTALLED AND COORDINATED WITH THE ARCHITECT.
6. WHEN SUPPLIED, DESIGN ENGINEER SHALL REVIEW AND APPROVE SUBMITTALS FOR ALL EQUIPMENT. IN THE CASE WHERE SUGGESTED SUBSTITUTE IS NOT ADEQUATE, SUBMITTAL SHALL BE RETURNED TO CONTRACTOR AND STAMPED AS "REVIEW AND RESUBMIT." SUBMITTAL APPROVAL CONFIRMS ONLY THAT SUGGESTED SUBSTITUTE HAS EQUIVALENT TECHNICAL PARAMETERS AND DESIGN CONSULTANT IS NOT RESPONSIBLE FOR ANY FINANCIAL IMPACT THAT THIS SUBSTITUTE CAUSES.
7. RESIDENTIAL HVAC SYSTEMS WITH CENTRAL FORCED AIR UNITS (FURNACES OR FAN COILS) HAVE LIMITED ZONING AND TEMPERATURE CONTROL ABILITY. THIS TYPE OF SYSTEMS ARE NOT CAPABLE OF CONTROLLING TEMPERATURES IN EACH ROOM INDIVIDUALLY. TEMPERATURES CAN BE CONTROLLED ONLY IN REFERENCE ROOMS WHERE THERMOSTATS ARE LOCATED. WHEN INDIVIDUAL ROOM TEMPERATURE CONTROL IS CRITICAL, CLIENT SHALL CONSULT WITH DESIGN TEAM AND CONTRACTORS FOR DIFFERENT SYSTEMS/SOLUTIONS.

B. CONTRACTOR NOTES

1. BEFORE SUBMITTING BID, CONTRACTOR SHALL SURVEY THE ENTIRE PROJECT SITE AND BECOME THOROUGHLY FAMILIAR WITH ACTUAL EXISTING CONDITIONS. THE INTENT OF WORK IS SHOWN ON THE DRAWINGS AND DESCRIBED HEREIN. BY THE ACT OF SUBMITTING A BID PROPOSAL FOR WORK, THE CONTRACTOR SHALL BE DEEMED TO HAVE MADE SUCH A STUDY AND EXAMINATION AND TO ACCEPT ALL CONDITIONS PRESENT AT SITE. NO REQUEST FOR ADDITIONAL PAYMENT SHALL BE CONSIDERED VALID, DUE TO CONTRACTOR FAILURE TO ALLOW IN COST ESTIMATE FOR CONDITIONS WHICH MAY EXIST.
2. CONTRACTOR SHALL REVIEW THE MECHANICAL AND OTHER CONSULTANTS DRAWINGS PRIOR TO STARTING ANY WORK AND INFORM ENGINEER AND ARCHITECT OF ANY DISCREPANCIES, OMISSIONS, OR IF CLARIFICATIONS ARE REQUIRED IN ORDER TO COMPLETE THE INSTALLATION PRIOR TO COMMENCING THE WORK. OWNER OR ITS REPRESENTATIVE SHALL SCHEDULE A MEETING WITH THE CONTRACTOR, ENGINEER, ARCHITECT AND OTHER CONSULTANTS DURING BIDDING PROCESS TO REVIEW AND DISCLOSE ANY DISCREPANCIES, OMISSIONS AND/OR CLARIFICATIONS RELATED TO THE CONSTRUCTION DOCUMENTS AND/OR SPECIFICATIONS NOTED BY CONTRACTOR AND/OR OWNER.
3. CONTRACTOR BID SHALL NOT BE LIMITED TO THE WORK SHOWN ON THE PLANS AND SPECIFICATIONS. ALL PREMIUM OVERTIME COSTS, UTILITY CHARGES, COST FOR TEMPORARY UTILITY SERVICES, ALL ALTERATIONS, ALL DEMOLITION AND EXTENSION WORKS, PERMITS, INSPECTION FEES, MISCELLANEOUS CONTINGENCY COST, ETC., SHALL BE INCLUDED IN BID.
4. ANY WORK TO BE PERFORMED MUST BE PLANNED IN ADVANCE. SCHEDULING SHALL BE DONE IN COOPERATION WITH CONSTRUCTION MANAGER. INCLUDE ALL PREMIUM TIME CHARGES IN BID TO COVER AFTER-HOURS AND WEEKEND WORK.
5. THE CONTRACTOR SHALL COORDINATE HIS WORK HARMONIOUSLY WITH ALL TRADES. COORDINATE THE LOCATIONS OF ALL CEILING DIFFUSERS, REGISTERS AND GRILLES WITH THE ARCHITECTURAL CEILING PLAN, ELECTRICAL LIGHTING LAYOUT AND ARCHITECTURAL ROOM ELEVATIONS. ALL WORK SHALL BE IN ACCORDANCE WITH BEST CONSTRUCTION PRACTICES.
6. THE CONTRACTOR SHALL FURNISH ALL MATERIAL, TOOLS, LABOR, ETC. TO INSTALL A COMPLETE AND FUNCTIONING SYSTEM AS INDICATED ON DRAWINGS.
7. THE CONTRACTOR SHALL REPORT TO THE CONSTRUCTION MANAGER IMMEDIATELY ANY INTERFERENCE BETWEEN TRADES OR WITH BUILDING OBSTRUCTIONS.
8. CONTRACTOR SHALL PROVIDE SHOP DRAWINGS FOR ALL EQUIPMENT, DUCTWORK, PIPING, DAMPERS, ETC. AND SUBMIT IT TO THE CONSTRUCTION MANAGER FOR APPROVAL.
9. COVER ALL WALLS, FLOOR, CEILING, AND ROOF OPENINGS LEFT AS THE RESULT OF THE WORK. PROVISIONS SHALL BE MADE TO PROTECT PEOPLE FROM INJURY AND TO PROTECT EQUIPMENT FROM WEATHER.
10. THE CONTRACTOR SHALL VERIFY THE INPUT VOLTAGE AND AMPERAGE (HORSEPOWER) RATING OF ALL EQUIPMENT AND CONFIRM WITH ELECTRICAL CONTRACTOR PRIOR TO INSTALLATION.
11. CONTRACTOR SHALL PROVIDE ALL SAFETY MATERIALS AND EQUIPMENT NOT LIMITED TO BARRIERS, SIGNS, LIGHTS, ETC.
12. CONTRACTOR SHALL PROVIDE BARRICADE, SAFETY SIGNS AND OTHER DEVICES TO ISOLATE WORK AREA DURING CONSTRUCTION, UPON CONSTRUCTION MANAGER APPROVAL.
13. CONTRACTOR SHALL REPAIR/PATCH AND WEATHER PROOF ANY OPENING CAUSED BY EQUIPMENT/PIPING INSTALLATION, AND SHALL PAINT WHERE NECESSARY.
14. THE CONTRACTOR SHALL PREPARE ONE (1) SET OF "RECORD DRAWINGS" PLANS AND KEEP AT JOB SITE FOR REVIEW BY THE CONSTRUCTION MANAGER. ANY CHANGES FROM THE DESIGN DRAWINGS SHALL BE NOTED WITH RED INK. UPON COMPLETION OF PROJECT THE CONTRACTOR SHALL SUBMIT THE PLANS TO THE CONSTRUCTION MANAGER.
15. THE CONTRACTOR SHALL THOROUGHLY CLEAN THE UNITS, REMOVE ALL PACKING LABELS, STICKERS AND ANY CRATING DEBRIS, AND LEAVE ALL INSTALLATION FINISHED AND READY FOR OPERATION.
16. AFTER COMPLETION, THE COMPLETE SYSTEM SHALL BE TESTED AND BALANCED. ANY ADDITIONAL BALANCING DEVICES REQUIRED FOR PROPER BALANCING SHALL BE INSTALLED. PRIOR TO BALANCING, ALL FILTERS SHALL BE REPLACED WITH NEW CLEAN FILTERS.
17. UPON COMPLETION OF PROJECT AND PRIOR TO ACCEPTANCE OF THE WORK BY THE CONSTRUCTION MANAGER, CONTRACTOR SHALL FURNISH TO HIM FOUR (4) COPIES OF OPERATION AND MAINTENANCE MANUAL OF EQUIPMENT BOUND IN BOOK FORM AND INDEXED. MANUAL SHALL CONTAIN PARTS LIST, RECOMMENDED PERIODS OF INSPECTION, ETC., AND NAME, ADDRESS AND PHONE NUMBER OF ALL SUPPLIERS.
18. THE CONTRACTOR SHALL FURNISH A TRAINED AND COMPETENT SERVICE ENGINEER TO INSTRUCT THE OPERATORS IN THE OPERATION AND MAINTENANCE OF THE SYSTEM.
19. COMPLETE INSTALLATION SHALL BE GUARANTEED, AND CONTRACTOR SHALL PROVIDE A MINIMUM 1 YEAR SERVICE, INCLUDING PARTS AND LABOR.

C. COMBUSTION AIR

1. ROUTING AND TERMINATION OF FLUE AND COMBUSTION AIR INTAKE FOR EACH HEATING UNIT SHALL COMPLY WITH CH 8. AND CH 7 OF CMC 2019 AND WITH MANUFACTURER'S SPECIFICATIONS. PROVIDE MANUFACTURER'S SPECIFICATIONS AND INSTALLATIONS INSTRUCTIONS TO VERIFY COMPLIANCE.
2. DRYER VENTS SHALL BE EQUIPPED WITH BACK-DRAFT DAMPERS PER 2019 CMC SECTION 504.4
3. SCREENS/LOUVERS SHALL NOT BE INSTALLED ON A DRYER VENT TERMINATION PER 2019 CMC SECTION 504.4.
4. FLEXIBLE CLOTHES DRYER TRANSITION DUCTS SHALL NOT BE CONCEALED WITH CONSTRUCTION.
5. CLOTHES DRYER EXHAUST TERMINATION AT THE EXTERIOR OF A BUILDING SHALL MAINTAIN A MINIMUM FIVE (5) FEET SEPARATION FROM THE CONDENSING UNIT.
6. EXHAUST DUCT FOR TYPE 1 DRYERS SHALL COMPLY WITH 2019 CMC SECTION 504.4.
7. FURNACES, BOILERS, AND WATER HEATERS LOCATED WITHIN THE HOME'S PRESSURE BOUNDARY ARE MECHANICALLY DRAFTED OR DIRECT-VENTED. AS AN EXCEPTION, NATURALLY DRAFTED EQUIPMENT IS ALLOWED IN CLIMATE ZONES 1-3. FOR NATURALLY DRAFTED FURNACES, BOILERS, AND WATER HEATERS, THE RATER HAS FOLLOWED RESNET OR BPI COMBUSTION SAFETY TEST PROCEDURES AND MET THE SELECTED STANDARD'S LIMITS FOR DEPRESSURIZATION, SPILLAGE, DRAFT PRESSURE, AND CO-CONCENTRATION IN AMBIENT AIR, AS WELL AS A CO-CONCENTRATION IN THE FLUE OF ≤ 25 PPM.
8. OPENINGS USED TO CONNECT INDOOR SPACES WHERE INDOOR COMBUSTION AIR IS USED SHALL BE SIZED AND LOCATED IN ACCORDANCE WITH THE FOLLOWING PER 2019 CMC 701.5:
   - EACH OPENING SHALL HAVE A FREE AREA OF NOT LESS THAN ONE (1) SQUARE INCH PER 1000 BTU/HR OF THE TOTAL INPUT RATING OF THE APPLIANCE IN THE SPACE, BUT NOT LESS THAN 100 SQUARE INCHES OF THE TOP OF THE ENCLOSURE AND ONE OPENING SHALL COMMENCE WITHIN TWELVE (12) INCHES OF THE BOTTOM OF THE ENCLOSURE. THE DIMENSION OF AIR OPENINGS SHALL BE NOT LESS THAN THREE (3) INCHES.
   - THE VOLUMES OF SPACES IN DIFFERENT STORIES SHALL BE CONSIDERED AS COMMUNICATING SPACES WHERE SUCH SPACES ARE CONNECTED BY ONE OR MORE OPENINGS IN DOORS OR FLOORS HAVING A TOTAL FREE AREA OF NOT LESS THAN TWO (2) SQUARE INCHES PER 1000 BTU/HR OF TOTAL INPUT RATING OF APPLIANCES.

D. DUCTWORK

1. ALL DUCTWORK SHALL BE CONSTRUCTED, ERECTED, AND SEALED IN ACCORDANCE WITH THE MOST RESTRICTIVE OF LOCAL REGULATIONS AND PROCEDURES DETAILED IN ASHRAE HANDBOOK OF FUNDAMENTALS OR THE APPLICABLE STANDARDS ADOPTED BY THE SHEET METAL AND AIR CONDITIONING CONTRACTORS NATIONAL ASSOCIATION AND THE UNIFORM MECHANICAL CODE.
2. ALL DUCT SIZES ARE CLEAR INSIDE SIZES. OBTAIN APPROVAL FROM CONSTRUCTION MANAGER FOR SIZING OF ANY DUCTWORK, WHERE SIZES ARE NOT SHOWN ON DRAWINGS.
3. MANUAL VOLUME DAMPERS SHALL BE PROVIDED IN ALL DUCT BRANCHES TO INDIVIDUAL BOXES, DIFFUSERS, GRILLES AND REGISTERS AND SHALL BE LOCKED IN THE FINAL POSITION AFTER COMPLETION OF AIR BALANCE.
4. TRANSVERSE AND LONGITUDINAL JOINTS FOR ALL SUPPLY AIR DUCTS SHALL BE SEALED WITH APPROVED MASTIC PER SMACNA.
5. APPROVED MATERIALS SHALL BE INSTALLED WITHIN DUCTS AND PLENUMS FOR INSULATING, SOUND DEADENING OR OTHER PURPOSES. MATERIALS SHALL HAVE A MOLD HUMIDITY AND RESISTANT SURFACE THAT MEETS THE REQUIREMENTS OF UL181.
6. ANY METALLIC DUCT WORK USED SHALL BE INSTALLED IN ACCORDANCE WITH 2019 CMC SECTION 603.3.
7. ALL HANGARS AND SUPPORTS SHALL BE INSTALLED IN ACCORDANCE WITH ALL APPLICABLE FEDERAL, STATE, AND LOCAL CODES. ALL CONNECTIONS TO JOISTS SHALL BE MADE AT THE TOP CORD.

E. EQUIPMENT/APPLIANCES

1. ALL EQUIPMENT SHALL BE INSTALLED IN STRICT ACCORDANCE WITH THE EQUIPMENT MANUFACTURER'S RECOMMENDATIONS.
2. ALL HVAC EQUIPMENT SHALL BE U.L. LISTED AND BEAR A U.L. LABEL.
3. CONDENSER PAD SHALL BE A MINIMUM OF THREE (3) INCHES HIGH AND SHALL BE PROVIDED AND INSTALLED BY THE MECHANICAL CONTRACTOR UNLESS OTHERWISE SPECIFIED. THE CONDENSER SHALL BE SECURELY FASTENED TO THE PAD TO PREVENT EXCESSIVE MOTION DURING NORMAL OPERATING CONDITIONS AND SEISMIC ACTIVITY.
4. LISTED DIRECT-VENT APPLIANCES SHALL BE INSTALLED IN ACCORDANCE WITH THE MANUFACTURER'S INSTALLATION INSTRUCTIONS. CMC SECTION 802.2.4.
5. ALL CHIMNEYS SHALL BE INSTALLED IN ACCORDANCE WITH 2019 CMC SECTION 802.5.1 THROUGH 802.5.3. 2019 CMC SECTION 802.5.
6. A CHIMNEY FOR RESIDENTIAL-TYPE OR LOW-HEAT APPLIANCE SHALL EXTEND NOT LESS THAN THREE (3) FEET ABOVE THE HIGHEST POINT WHERE IT PASSES THROUGH A ROOF OF A BUILDING AND NOT LESS THAN TWO (2) FEET HIGHER THAN A PORTION OF A BUILDING WITHIN A HORIZONTAL DISTANCE OF TEN (10) FEET. 2019 CMC SECTION 802.5.4.
7. THE FUEL INPUT RATE TO THE APPLIANCE SHALL NOT BE INCREASED OR DECREASED IN VIOLATION OF THE APPROVED RATING AT THE ALTITUDE WHERE IT IS BEING USED. CMC 2019 SECTION 902.6.
8. ALL ELECTRICAL AIR CONDITIONER SYSTEMS DESIGNED FOR PERMANENT INSTALLATION SHALL COMPLY WITH UL 1995 OR UL 60335-2-40. 2019 CMC SECTION 903.1.
9. ALL GAS FIRED AIR CONDITIONERS SHALL COMPLY WITH SECTION 903.2.1 THROUGH SECTION 903.2.7. 2019 CMC SECTION 903.2.
10. LISTED OUTDOOR COOKING APPLIANCES SHALL BE INSTALLED IN ACCORDANCE WITH THEIR LISTING AND THE MANUFACTURER'S INSTALLATION INSTRUCTIONS, 2019 CMC SECTION 923.1. UNLISTED OUTDOOR COOKING APPLIANCES SHALL BE INSTALLED OUTDOORS WITH CLEARANCES TO COMBUSTIBLE MATERIAL OF NOT LESS THAN THIRTY-SIX(36) INCHES AT THE SIDES AND BACK AND NOT LESS THAN FOURTY-EIGHT (48) INCHES AT THE FRONT. IN NO CASE SHALL THE APPLIANCE BE LOCATED UNDER OVERHEAD COMBUSTIBLE CONSTRUCTION. 2019 CMC 923.2

F. FIRE PROTECTION

1. SEAL ALL PENETRATIONS THROUGH WALLS, CEILINGS, FLOOR, ETC. TO MAINTAIN THE FIRE RATING, AND BUILDING PRESSURIZATION.
2. EACH SINGLE SYSTEM HEATING OR COOLING AIR IN EXCESS OF 2,000 CUBIC FEET PER MINUTE SHALL BE EQUIPPED WITH AN AUTOMATIC SHUTOFF ACTIVATED BY SMOKE DETECTORS PER 2019 CMC SECTION 608.
3. PROVIDE LISTED DUCT TYPE SMOKE DETECTOR IN THE SUPPLY AIR DUCT IN EVERY AIR MOVING SYSTEM SUPPLYING AIR IN EXCESS 2000 CFM (MULTIPLE UNITS SERVING THE SAME ROOM, OR HAVING A COMMON RETURN AIR PLENUM OR COMMON OCA DUCT ARE CONSIDERED TO BE ONE SYSTEM FOR DETERMINATION OF THE CFM).
4. COMBINATION FIRE / SMOKE DAMPERS (FSD) SHALL CLOSE AUTOMATICALLY UPON DETECTION OF HEAT AND/OR SMOKE TO RESIST THE PASSAGE OF FLAME AND SMOKE. THE DAMPER SHALL BE CONTROLLED BY HEAT/FIRE AND SMOKE DETECTION SYSTEM IN CONFORMANCE WITH LOCAL CODE.
   - HEAT/FIRE DETECTION SYSTEM SHALL BE FACTORY PROVIDED WITH DAMPER.
   - SMOKE DETECTION SYSTEM SHALL BE A DUCT SMOKE DETECTOR INSTALLED PER LOCAL CODE. DUCT SMOKE DETECTOR SHALL BE FACTORY PROVIDED WITH DAMPER OR BY THIRD PARTY.

G. PIPING

1. ALL HANGARS AND SUPPORTS SHALL BE INSTALLED IN ACCORDANCE WITH ALL APPLICABLE FEDERAL, STATE AND LOCAL CODES. ALL CONNECTIONS TO JOISTS SHALL BE MADE AT THE TOP CORD.
2. PLUMBING CONTRACTOR SHALL FURNISH AND INSTALL ALL CONDENSATE DRAIN LINES WITH CONNECTIONS TO AN APPROVED RECEPTOR IN ACCORDANCE WITH THE CALIFORNIA PLUMBING CODE. REFER TO PLUMBING PLANS FOR ALL PRIMARY AND SECONDARY CONDENSATE ROUTING.
3. CONTRACTOR SHALL VERIFY IN FIELD THE SHORTEST ROUTING FOR REFRIGERANT LINES THAT COMPLY WITH MANUFACTURER'S INSTALLATION GUIDELINES AND DO NOT INTERFERE OR RESTRICT OTHER TRADES.
4. THE LIQUID AND SUCTION LINES SHALL BE PROTECTED FROM THE ENVIRONMENT USING A WATER RESISTANT METAL JACKET, PAINTED CANVAS, PLASTIC COVER OR COATING PER 2019 CEC.

APPLICABLE CODES

APPLICABLE CODES AS OF JANUARY 1, 2020:

2019 CALIFORNIA BUILDING STANDARDS ADMINISTRATIVE CODE, PART 1, TITLE 24 C.C.R. ;

2019 CALIFORNIA BUILDING CODE (CBC), PART 2, TITLE 24 C.C.R. ;
(2018 INTERNATIONAL BUILDING CODE & 2019 CALIFORNIA AMENDMENTS)

2019 CALIFORNIA ELECTRICAL CODE (CEC), PART 3, TITLE 24 C.C.R. ;
(2017 NATIONAL ELECTRICAL CODE & 2019 CALIFORNIA AMENDMENTS)

2019 CALIFORNIA MECHANICAL CODE (CMC), PART 4, TITLE 24 C.C.R. ;
(2018 UNIFORM MECHANICAL CODE & 2019 CALIFORNIA AMENDMENTS)

2019 CALIFORNIA PLUMBING CODE (CPC), PART 5, TITLE 24 C.C.R. ;
(2018 UNIFORM PLUMBING CODE & 2019 CALIFORNIA AMENDMENTS)

2019 CALIFORNIA ENERGY CODE (CEC), PART 6, TITLE 24 C.C.R. ;

2019 CALIFORNIA FIRE CODE (CFC), PART 9, TITLE 24 C.C.R. ;
(2018 INTERNATIONAL FIRE CODE & 2019 CALIFORNIA AMENDMENTS)

2019 CALIFORNIA GREEN BUILDING STANDARDS CODE (CALGreen), PART 11, TITLE 24 C.C.R. ;

2019 CALIFORNIA REFERENCED STANDARDS, PART 12, TITLE 24 C.C.R. ;

TITLE 19 C.C.R., PUBLIC SAFETY, STATE FIRE MARSHAL REGULATIONS

CALGREEN NOTES

1. OPENINGS IN THE BUILDING ENVELOPE SEPARATING CONDITIONED SPACE FROM UNCONDITIONED SPACE NEEDED TO ACCOMODATE GAS, PLUMBING, ELECTRICAL LINES AND OTHER NECESSARY PENETRATIONS MUST BE SEALED IN COMPLIANCE WITH CALIFORNIA ENERGY CODE. CAL GREEN 4.406.1
2. AT THE TIME OF FINAL INSPECTION, A MANUAL, COMPACT DISC, WEB-BASED REFERENCE OR OTHER MEDIA ACCEPTABLE TO THE ENFORCING AGENCY INCLUDING ITEMS 1 THROUGH 10 IN ACCORDANCE WITH THIS SECTION SHALL BE PLACED IN THE BUILDING. CAL GREEN 4.410.1
   - 2.1. DIRECTIONS TO THE OWNER OR OCCUPANT THAT THE MANUAL SHALL REMAIN WITHIN BUILDING THROUGHOUT THE LIFE CYCLE OF THE STRUCTURE.
   - 2.2. OPERATION AND MAINTENANCE INSTRUCTIONS FOR THE FOLLOWING:
   - 2.2.1. EQUIPMENT AND APPLIANCES, INCLUDING WATER-SAVING DEVICES AND SYSTEMS, HVAC SYSTEMS, PHOTOVOLTAIC SYSTEMS, ELECTRIC VEHICLE CHARGERS, WATER-HEATING SYSTEMS AND OTHER MAJOR APPLIANCES AND EQUIPMENT.
   - 2.2.2. ROOF AND YARD DRAINAGE, INCLUDING GUTTERS AND DOWNSPOUTS.
   - 2.2.3. SPACE CONDITIONING SYSTEMS, INCLUDING CONDENSERS AND AIR FILTERS.
   - 2.2.4. LANDSCAPE IRRIGATION SYSTEMS.
   - 2.2.5. WATER REUSE SYSTEMS.
   - 2.3. INFORMATION FROM LOCAL UTILITY, WATER AND WASTE RECOVERY PROVIDERS ON METHODS TO FURTHER REDUCE CONSUMPTION, INCLUDING RECYCLE PROGRAMS AND LOCATIONS.
   - 2.4. PUBLIC TRANSPORTATION AND/OR CARPOOL OPTIONS AVAILABLE IN THE AREA.
   - 2.5. EDUCATIONAL MATERIAL ON THE POSITIVE IMPACTS OF AN INTERIOR RELATIVE HUMIDITY BETWEEN 30-60 PERCENT AND WHAT METHODS AN OCCUPANT MAY USE TO MAINTAIN THE RELATIVE HUMIDITY LEVEL IN THAT RANGE.
   - 2.6. INFORMATION ABOUT WATER-CONSERVING LANDSCAPE AND IRRIGATION DESIGN AND CONTROLLER WHICH CONSERVE WATER.
   - 2.7. INSTRUCTIONS FOR MAINTAINING GUTTERS AND DOWNSPOUTS AND THE IMPORTANCE OF DIVERTING WATER AT LEAST 5 FEET AWAY FROM THE FOUNDATION.
   - 2.8. INFORMATION ON REQUIRED ROUTINE MAINTENANCE MEASURES, INCLUDING, BUT NOT LIMITED TO, CAULKING, PAINTING, GRADING AROUND THE BUILDING, ETC.
   - 2.9. INFORMATION ABOUT STATE SOLAR ENERGY AND INCENTIVE PROGRAMS AVAILABLE.
   - 2.10. A COPY OF ALL SPECIAL INSPECTION VERIFICATIONS REQUIRED BY THE ENFORCING AGENCY OR THIS CODE.
3. AT THE TIME OF ROUGH INSTALLATION OR DURING STORAGE ON THE CONSTRUCTION SITE AND UNTIL FINAL STARTUP OF THE HEATING AND COOLING EQUIPMENT, ALL DUCT AND OTHER RELATED AIR DISTRIBUTION COMPONENT OPENINGS SHALL BE COVERED WITH TAPE, PLASTIC, SHEET METAL OR OTHER METHODS ACCEPTABLE TO THE ENFORCING AGENCY TO REDUCE THE AMOUNT OF DUST OR DEBRIS WHICH MAY COLLECT IN THE SYSTEM. CAL GREEN 4.504.1
4. HEATING AND AIR-CONDITIONING SYSTEMS HAS BEEN SIZED, DESIGNED AND HAVE THEIR EQUIPMENT SELECTED USING THE FOLLOWING METHODS:
   - 4.1. THE HEAT LOSS AND HEAT GAIN IS ESTABLISHED ACCORDING TO ACCA MANUAL J, ASHRAE HANDBOOKS OR OTHER EQUIVALENT DESIGN SOFTWARE OR METHODS.
   - 4.2. DUCT SYSTEMS ARE SIZED ACCORDING TO ACCA 29-D MANUAL D, ASHRAE HANDBOOKS OR OTHER EQUIVALENT DESIGN SOFTWARE OR METHODS.
   - 4.3. SELECT HEATING AND COOLING EQUIPMENT ACCORDING TO ACCA 36-S MANUAL S OR OTHER EQUIVALENT DESIGN SOFTWARE OR METHODS.

   EXCEPTION: USE OF ALTERNATE DESIGN TEMPERATURES NECESSARY TO ENSURE THE SYSTEMS FUNCTION ARE ACCEPTABLE. CAL GREEN 4.507.2
5. INSTALLATIONS OF HVAC, REFRIGERATION AND FIRE SUPPRESSION EQUIPMENT SHALL NOT CONTAIN ANY CFCs OR HALONS. CAL GREEN 5.508.1
6. DEVELOP A WRITTEN PLAN OF PROCEDURES FOR TESTING AND ADJUSTING SYSTEMS. SYSTEMS TO BE INCLUDED FOR TESTING AND ADJUSTING SHALL INCLUDE, AS APPLICABLE TO THE PROJECT, THE SYSTEMS LISTED IN SECTION 5.410.4.2.
7. ADHESIVES, SEALANTS, AND CAULKS USED ON THE PROJECT SHALL MEET THE REQUIREMENTS OF SECTIONS 5.504.4.1 THROUGH 5.504.4.6.
8. BATHROOM EXHAUST FANS SHALL BE ENERGY STAR COMPLIANT AND DUCTED TO TERMINATE OUTSIDE THE BUILDING.
9. UNLESS FUNCTIONING AS A COMPONENT OF A WHOLE HOUSE VENTILATION SYSTEM, BATHROOM EXHAUST FANS MUST BE CONTROLLED BY A HUMIDITY CONTROL, WHICH SHALL BE CAPABLE OF ADJUSTMENT BETWEEN A RELATIVE HUMIDITY RANGE OF 50 TO 80% (SEC 4.506.1)
10. HVAC SYSTEM INSTALLERS SHALL BE TRAINED AND CERTIFIED IN THE PROPER INSTALLATION OF HVAC SYSTEMS INCLUDING DUCTS AND EQUIPMENT BY A NATIONALLY OR REGIONALLY RECOGNIZED TRAINING OR CERTIFICATION PROGRAM. UNCERTIFIED PERSONS MAY PERFORM HVAC INSTALLATIONS WHEN UNDER DIRECT SUPERVISION AND RESPONSIBILITY OF A PERSON TRAINED AND CERTIFIED TO INSTALL HVAC SYSTEMS OR CONTRACTOR LICENSED TO INSTALL HVAC SYSTEM.
11. ANY INSTALLED GAS FIREPLACE SHALL BE A DIRECT-VENT SEALED-COMBUSTION TYPE. ANY INSTALLED WOODSTOVES OR PELLET STOVE SHALL COMPLY WITH U.S. EPA NEW SOURCE PERFORMANCE STANDARDS (NSPS) EMISSION LIMITS AS APPLICABLE, AND SHALL HAVE A PERMANENT LABEL INDICATING THEY ARE CERTIFIED TO MEET THE EMISSION LIMITS. WOODSTOVES, PELLET STOVES AND FIREPLACES SHALL ALSO COMPLY WITH APPLICABLE LOCAL ORDINANCES.
12. THE CALGREEN INSPECTOR FOR THIS PROJECT IS LISTED BY THE LOCAL JURISDICTION AS AN APPROVED CALGREEN INSPECTOR AND IS QUALIFIED AND ABLE TO DEMONSTRATE COMPETENCE IN THE DISCIPLINE THEY INSPECT AND VERIFY.
13. VERIFICATION OF COMPLIANCE WITH THIS CODE MAY INCLUDE CONSTRUCTION DOCUMENTS, PLANS, SPECIFICATIONS, BUILDER OR INSTALLER CERTIFICATION, INSPECTION REPORTS, OR OTHER METHODS ACCEPTABLE TO THE ENFORCING AGENCY WHICH SHOW SUBSTANTIAL CONFORMANCE.

SHEET INDEX

NO.	SHEET	DESCRIPTION
1	M-0.1	GENERAL NOTES
2	M-0.2	LEGENDS
3	M-0.3	EQUIPMENT SCHEDULES
4	M-2.1	BUILDING A FLOOR PLANS
5	M-2.2	BUILDING B FLOOR PLANS
6	M-3.1	UNIT A & A - ADU FLOOR PLANS
7	M-3.2	UNIT B FLOOR PLANS
8	MD-1	DETAILS
9	MD-2	DETAILS

ISSUED DATE: XX/XX/XX

GOUVIS engineering consulting group, inc.®
15 Studebaker
Irvine
CA 92618

Irvine
tel 949.752.1612
fax 949.752.5321

Palm Springs
tel 760.323.5090

REGISTERED PROFESSIONAL ENGINEER
RADE BABIC
No. M38573
MECHANICAL
STATE OF CALIFORNIA

DATE SIGNED: 1/30/24

RESTRICTIVE NOTICE

THESE DESIGNS, DRAWINGS, AND SPECIFICATIONS ARE THE EXCLUSIVE PROPERTY OF GOUVIS ENGINEERING CONSULTING GROUP. THEY ARE THE SUBJECTOF COPYRIGHT AND OTHER LEGAL PROTECTION. THEY MAY BE USED ONLY BY THEIR INTENDED RECIPIENT AND ONLY FOR THE PROJECT DEPICTED HEREIN. NO PART OF THESE DRAWINGS ARE TO BE COPIED, TRANSFERRED, REPRODUCED, NOR CAN THEY BE USED, IN WHOLE OR IN PART, BY ANY OTHER PERSON OR FOR ANY OTHER PROJECT OR STRUCTURE, WITHOUT THE PRIOR EXPRESS WRITTEN CONSENT OF GOUVIS ENGINEERING CONSULTING GROUP

© 2017 GOUVIS ENGINEERING CONSULTING GROUP INC. - ALL RIGHTS RESERVED

PROJECT:
Tenant Square

DEVELOPER:
Osito Holdings LLC

ARCHITECT:
Gary Moore & Associates

LOCATION:
Morgan Hill
Santa Clara
CA

REVISIONS

NO.	DATE	DESCRIPTION
1	02/02/23	PLAN CHECK
2	11/01/23	PLAN CHECK
3	01/30/24	FIRE COMMENT

SHEET NAME:
GENERAL NOTES

PROJECT NUMBER:
66074

ENGINEER:

DRAFTER:

SHEET NUMBER:
M-0.1

LEGEND

SYMBOL	DESCRIPTION	SYMBOL	DESCRIPTION
#	KEY NOTE	TYPE / DESIGNATION	EQUIPMENT TAG
12X24	RECTANGULAR OR FLAT OVAL DUCTWORK SIZE (FIRST NUMBER IS SIDE SHOWN)		HVAC FURNACE
8Ø	FLEXIBLE DUCTWORK		HVAC A/C UNIT OR HEAT PUMP
SA RA EA / UP / DN	DUCT SECTION		CEILING MOUNTED EXHAUST FAN
NECK SIZE/TAG / AIR FLOW (CFM)	AIR DEVICE MARK		STORAGE TANK
SA RA EA	RECTANGULAR DIFFUSER		HVAC ACCESS PANEL
SA RA/EA	SIDE-WALL MOUNTED SUPPLY GRILLE OR RETURN/EXHAUST GRILLE	T / T S	THERMOSTAT THERMOSTAT SUSPENDED
SA RA/EA	AIR FLOW	TS	TEMPERATURE SENSOR/TRANSMITTER
SA RA/EA	DUCT MOUNTED SIDE OUTLET/INLET REGISTER	HS	HUMIDITY SENSOR/ TRANSMITTER
SA RA EA	BOTTOM OUTLET/INLET REGISTER (PATTERN AS SHOWN ON PLANS)	P	PRESSURE DIFFERENTIAL SENSOR
UP / DN	OFF-SET UP OR DOWN	SD	SMOKE DETECTOR
	INTERNALLY LINED DUCTWORK		POINT OF CONNECTION (P.O.C)
	FLEXIBLE CONNECTION		DROPPED CEILING
	RECTANGULAR TO ROUND TRANSITION	C	CONTROLLER
	ELBOWS WITH TURNING VANES	CO	CO SENSOR
A.D.	ACCESS DOOR		
H / C	HC - HEATING COIL CC - COOLING COIL PHC - PRE-HEAT COIL RHC - RE-HEAT COIL		
	MANUAL VOLUME DAMPER		
	OPPOSED BLADE DAMPER		
BDD	BACKDRAFT DAMPER		
M	MOTORIZED DAMPER		
FD	FIRE DAMPER		
FSD	FIRE SMOKE DAMPER		
	FILTER		
	LOUVER		

ABBREVIATIONS

ABBREVIATION	DESCRIPTION
AD	ACCESS DOOR
BDD	BACKDRAFT DAMPER
CFM	CUBIC FEET PER MINUTE
dBA	A-WEIGHTED DECIBEL
EA	EXHAUST AIR
EF	EXHAUST FAN
FC	FAN COIL
FD	FIRE DAMPER
HP	HEAT PUMP
HSPF	HEATING SEASONAL PERFORMANCE FACTOR
LAU	LAUNDRY ROOM
MVD	MANUAL VOLUME DAMPER
NG	NATURAL GAS
OSA	OUTSIDE AIR
PDR	POWDER ROOM
RA	RETURN AIR
RL	REFRIGERANT LIQUID
RS	REFRIGERANT SUCTION
RVD	REMOTE OPERATED DAMPER
SA	SUPPLY AIR
SD	SMOKE DETECTOR
SQFT	SQUARE FEET

ISSUED DATE: XX/XX/XX

GOUVIS engineering consulting group, inc.®

15 Studebaker
Irvine
CA 92618

Irvine
tel 949.752.1612
fax 949.752.5321

Palm Springs
tel 760.323.5090

REGISTERED PROFESSIONAL ENGINEER
RADE BABIC
No. M38573
MECHANICAL
STATE OF CALIFORNIA

DATE SIGNED: 1/30/24

RESTRICTIVE NOTICE

THESE DESIGNS, DRAWINGS, AND SPECIFICATIONS ARE THE EXCLUSIVE PROPERTY OF GOUVIS ENGINEERING CONSULTING GROUP. THEY ARE THE SUBJECTOF COPYRIGHT AND OTHER LEGAL PROTECTION. THEY MAY BE USED ONLY BY THEIR INTENDED RECIPIENT AND ONLY FOR THE PROJECT DEPICTED HEREIN. NO PART OF THESE DRAWINGS ARE TO BE COPIED, TRANSFERRED, REPRODUCED, NOR CAN THEY BE USED, IN WHOLE OR IN PART, BY ANY OTHER PERSON OR FOR ANY OTHER PROJECT OR STRUCTURE, WITHOUT THE PRIOR EXPRESS WRITTEN CONSENT OF GOUVIS ENGINEERING CONSULTING GROUP

© 2017 GOUVIS ENGINEERING CONSULTING GROUP INC. - ALL RIGHTS RESERVED

PROJECT:
Tenant Square

DEVELOPER:
Osito Holdings LLC

ARCHITECT:
Gary Moore & Associates

LOCATION:
Morgan Hill
Santa Clara
CA

REVISIONS

NO.	DATE	DESCRIPTION
1	02/02/23	PLAN CHECK
2	11/01/23	PLAN CHECK
3	01/30/24	FIRE COMMENT

SHEET NAME:
LEGENDS

PROJECT NUMBER:
66074

ENGINEER:

DRAFTER:

SHEET NUMBER:
M-0.2

DIFFUSERS/GRILLES/REGISTERS

TAG / CFM

TAG	MANUFACTURER MODEL NO.	AIRFLOW RANGE (CFM)	DUCT SIZE (IN.)	FACE SIZE (IN.)	PRESS. DROP (IN. W.G.)	FUNCTION	NOTES
S-1	TRUAIRE 210VM	0 - 50 51 - 100 101 - 150 151 - 200 201 - 300 301 - 400	Ø5 Ø6 Ø7 Ø8 Ø9 Ø10	10 x 4 10 x 6 12 x 6 14 X 6 14 X 8 14 X 12	0.01 0.01 0.01 0.02 0.02 0.01	CEILING & WALL SUPPLY GRILLE	1,2,3,4,5
R-1	TRUAIRE 290 FIXED BAR	0 - 850 0 - 2500	Ø10 Ø18	14 X 14 30 X 20	0.065	CEILING & WALL RETURN GRILLE	1,2,3,4,5

NOTES:
1. ALL PERFORMANCE DATA SHALL BE IN ACCORDANCE WITH ANSI/ASHRAE STANDARDS.
2. UNLESS OTHERWISE NOTED, ALL DIFFUSERS/REGISTERS/GRILLES SHALL HAVE NC RATINGS <30.
3. COORDINATE FRAME TYPE WITH ARCHITECTURAL RCP.
4. COLOR TO BE SPECIFIED BY ARCHITECT.
5. PROVIDE GRILLE WITH VERTICAL ORIENTED BLADES AND MULTI SHUTTER DAMPER.

SEQUENCE OF OPERATIONS

NOTE: ELECTRICAL CONTRACTOR SHALL PROVIDE AND INSTALL RELAYS AS REQUIRED TO ACHIEVE CONTROL OF UNITS AS SPECIFIED BELOW

FC/CU's	Unit shall operate via a wall-mounted thermostat. Fan to operate as required by thermostat. Cooling and heating modes shall operate as required by thermostat.
EF R	Fan to operate via a wall-mounted switch. Switch to interlock with light.
EF B	Fan to operate via built-in humidity sensor.
EF MB	Fan to operate continuously while house is occupied. Fan to act as IAQ fan to meet ASHRAE 62.2 ventilation requirements.

AIR SYSTEM DESIGN CRITERIA

CITY	MORGAN HILL
COUNTY	SANTA CLARA
CLIMATE ZONE	4
SUMMER AMBIENT DESIGN TEMPERATURE (°F DB/WB)	92 / 68
SUMMER DAILY RANGE (°F WB)	25
WINTER AMBIENT DESIGN TEMPERATURE (°F DB)	26
SUMMER INDOOR DESIGN TEMPERATURE (°F DB)	75
WINTER INDOOR DESIGN TEMPERATURE (°F DB)	68

WHOLE UNIT VENTILATION CALCULATION (ASHRAE 62.2) CONTINUOUSLY

LOCATION	UNIT A	UNIT A - ADU	UNIT B
FLOOR AREA (SQFT)	1543	1509	1539
NO. OF BEDROOMS	3	3	3
VENTILATION RATE (CFM) = 0.03(SQFT) +7.5(BEDROOMS+1)	76.3	75.3	76.2
DESIGNED VENTILATION (CFM)	80	80	80

SCHEDULE OF NEW HEAT PUMP UNITS

HP TAG

GENERAL						COOLING					HEATING			REF. PIPING			ELECTRICAL			NOTES
TAG	SERVICE	MANUFACTURER MODEL NO.	LOCATION	TONS	WEIGHT (LBS)	AMB. DB (°F)	TOTAL LOAD (MBH)	SENS. LOAD (MBH)	EER (EER2)	SEER (SEER2)	AMB. DB (°F)	TOTAL LOAD (MBH)	HSPF (HSPF2)	TYPE	SYSTEM CHARGE (LBS)	CONN. Ø LIQUID / SUCTION (IN.)	VOLTS/ PHASE/ HERTZ	MCA (A)	MOCP (A)	
36	SEE PLAN	CARRIER 38MBRCQ36AA3	SEE PLAN	3.0	155.42	95	36.0	--	8.8 (8.2)	17.0 (15.4)	47	38.0	11.3 (9.0)	R-410A	6.72	3/8 5/8	208/230/ 1/60	30	50	1,2,3,4,5,6

NOTES:
1. DISCONNECT SWITCH TO BE PROVIDED AND INSTALLED BY ELECTRICAL CONTRACTOR.
2. PROVIDE CONTROL WIRING, CONDUIT, ETC. FOR A COMPLETE AND OPERABLE SYSTEM.
3. PROVIDE ALL REQUIRED MATERIALS & INSULATED REFRIGERANT LINES FOR COMPLETE INSTALLATION. SIZE RS/RL PIPING PER MANUFACTUERS GUIDELINES.
4. RS/RL ACCESS PORTS LOCATED OUTDOORS SHALL BE PROTECTED FROM UNAUTHORIZED ACCESS WITH LOCKING TYPE TAMPER RESISTANT CAPS. UNLESS THEY ARE PROTECTED BY WALLS OR FENCING AND REQUIRING KEY ACCESS.
5. CONDENSING UNIT SHALL REST ON A CONCRETE OR OTHER APPROVED BASE PER DETAILS ON MD-1.
6. INSTALL EQUIPMENT IN ACCORDANCE WITH BOTH THE DETAILS SHOWN IN THE CONTRACT DOCUMENTS AND IN ACCORDANCE WITH THE MANUFACTURER'S RECOMMENDATIONS.

3

SCHEDULE OF NEW FAN COIL UNITS

FC TAG

GENERAL						FAN DATA			COOLING		HEATING		ELECTRICAL			NOTES
TAG	SERVICE	MANUFACTURER MODEL NO.	LOCATION	HP	WEIGHT (LBS)	TOTAL AIR QTY (CFM)	OUTSIDE AIR QTY (CFM)	EXTERNAL STATIC PRESSURE (IN. W.G.)	TOTAL LOAD (MBH)	SENS. LOAD (MBH)	TOTAL LOAD (MBH)	ELEC. HEAT	VOLTS/ PHASE/ HERTZ	MCA (A)	MOCP (A)	
36	SEE PLAN	CARRIER 40MBABQ36XA3	SEE PLAN	36	129.63	1200	0	0.8	36.0	--	38.0	N/A	208/230/ 1/60	5.0	POWERED FROM OUTDOOR UNIT	1,2,3,4,5,6,8

NOTES:
1. DISCONNECT SWITCH TO BE PROVIDED AND INSTALLED BY ELECTRICAL CONTRACTOR.
2. PROVIDE HARD-WIRED PROGRAMMABLE SETBACK THERMOSTAT, CONTROL WIRING, CONDUIT, ETC. FOR A COMPLETE AND OPERABLE SYSTEM.
3. PROVIDE UNIT WITH ECM MOTOR SET TO PROVIDE CFM QUANTITIES PER SCHEDULE.
4. PROVIDE UNIT WITH ACCESS PER MANUFACTURER'S RECOMMENDATIONS AND LOCAL CODE REQUIREMENTS.
5. PROVIDE UNIT WITH FACTORY SECONDARY DRAIN PAN.
6. PROVIDE ALL REQUIRED MATERIALS & INSULATED REFRIGERANT LINES FOR COMPLETE INSTALLATION. SIZE RS/RL PIPING PER MANUFACTURERS GUIDELINES.
7. INDOOR UNIT TO RECEIVE POWER FROM OUTDOOR UNIT.
8. PROVIDE MERV 13 FILTER.

SCHEDULE OF FANS

TYPE TAG

GENERAL						FAN DATA			MOTOR			NOTES
TYPE TAG	SERVICE	MANUFACTURER MODEL NO.	LOCATION	WEIGHT (LBS)	TYPE / DESIGN	TOTAL AIR QTY (CFM)	EXTERNAL STATIC PRESSURE (IN. W.G.)	SONES	MOTOR TYPE	RATED SIZE	VOLTS/ PHASE/ HERTZ	
EF R	RESTROOM	AIRKING AK50S	CEILING	12.0	CEILING MOUNTED	50	0.1	0.5	PSC	14.5 W	120/1/60	1,2,3
EF B	BATHROOM	AIRKING ES80SH	CEILING	17.0	CEILING MOUNTED	80	0.1	0.3	PSC	29.4 W	120/1/60	1,2,3,4
EF MB	MASTER BATHROOM	AIRKING E130SH	CEILING	15.6	CEILING MOUNTED	130	0.1	0.3	PSC	37.0 W	120/1/60	1,2,3,4

NOTES:
1. ALL FANS SHALL BE TESTED AND RATED, CERTIFIED, AND SEALED IN ACCORDANCE WITH AMCA FOR BOTH SOUND AND AIR PERFORMANCE. ALL FANS SHALL BE U.L. LISTED.
2. FAN SHALL BE PROVIDED WITH A NEMA-1 (INDOORS) OR NEMA-3R (OUTDOORS) DISCONNECT SWITCH. REFER TO ELECTRICAL DRAWINGS FOR MORE INFORMATION.
3. PROVIDE GRAVITY BACKDRAFT DAMPER IN THROAT OF EXHAUST DUCT.
4. FAN SHALL BE PROVIDED WITH BUILT-IN HUMIDITY SENSOR.

ISSUED DATE: XX/XX/XX

GOUVIS engineering consulting group, inc.®
15 Studebaker
Irvine
CA 92618

Irvine
tel 949.752.1612
fax 949.752.5321

Palm Springs
tel 760.323.5090

REGISTERED PROFESSIONAL ENGINEER
RADE BABIC
No. M38573
MECHANICAL
STATE OF CALIFORNIA

DATE SIGNED: 1/30/24

RESTRICTIVE NOTICE

THESE DESIGNS, DRAWINGS, AND SPECIFICATIONS ARE THE EXCLUSIVE PROPERTY OF GOUVIS ENGINEERING CONSULTING GROUP. THEY ARE THE SUBJECTOF COPYRIGHT AND OTHER LEGAL PROTECTION. THEY MAY BE USED ONLY BY THEIR INTENDED RECIPIENT AND ONLY FOR THE PROJECT DEPICTED HEREIN. NO PART OF THESE DRAWINGS ARE TO BE COPIED, TRANSFERRED, REPRODUCED, NOR CAN THEY BE USED, IN WHOLE OR IN PART, BY ANY OTHER PERSON OR FOR ANY OTHER PROJECT OR STRUCTURE, WITHOUT THE PRIOR EXPRESS WRITTEN CONSENT OF GOUVIS ENGINEERING CONSULTING GROUP

© 2017 GOUVIS ENGINEERING CONSULTING GROUP INC. - ALL RIGHTS RESERVED

PROJECT:
Tenant Square

DEVELOPER:
Osito Holdings LLC

ARCHITECT:
Gary Moore & Associates

LOCATION:
Morgan Hill
Santa Clara
CA

REVISIONS

NO.	DATE	DESCRIPTION
1	02/02/23	PLAN CHECK
2	11/01/23	PLAN CHECK
3	01/30/24	FIRE COMMENT

SHEET NAME:
EQUIPMENT SCHEDULES

PROJECT NUMBER:
66074

ENGINEER:

DRAFTER:

SHEET NUMBER:
M-0.3

HVAC GENERAL NOTES

1. REFER TO DRAWING M-0.1 FOR LEGENDS, SYMBOLS, ABBREVIATIONS & GENERAL NOTES.
2. REFER TO DRAWING M-0.2 FOR EQUIPMENT SCHEDULES.
3. REFER TO MD SHEETS FOR MECHANICAL DETAILS.
4. DUCT INSULATION R VALUES SHALL BE PER REGISTERED T24 COMPLIANCE DOCUMENTATION. COORDINATE EXACT ROUTING OF DUCTWORK WITH STRUCTURAL AND ALL OTHER TRADES, ROUTING SHOWN IS SCHEMATIC ONLY.
5. PROVIDE CAN AND DUCT COLLAR AS REQUIRED FOR ALL GRILLES AND DIFFUSERS.
6. OPENINGS IN THE ROOF SHALL NOT BE LOCATED WITHIN 5 FEET (1,524 MM) OF THE 1-HOUR FIRE-RESISTANCE-RATED EXTERIOR WALL FOR GROUPS R AND U AND 10 FEET (3,048 MM) OR OTHER OCCUPANCIES, MEASURED FROM THE INTERIOR SIDE OF THE WALL. (CBC 705.11.4.3).
7. FOR DOMESTIC DRYERS PROVIDE A MINIMUM OF 100 SQ. IN FREE AREA OPENING(S) INTO LAUNDRY ROOM FOR MAKE-UP AIR AS REQUIRED BY CODE (CMC 504.4.1). FOR TYPE 2 (COMMERCIAL DRYERS) MAKEUP AIR SHALL BE PROVIDED WITH AREA NOT LESS THAN 1 SQ.IN. FOR EACH 1000 BTUH OF TOTAL INPUT RATING OF THE DRYERS INSTALLED.
8. FIRE SEAL ALL PENETRATIONS AS REQUIRED BY CODE.
9. FIRE DAMPER RATINGS SHALL BE IN ACCORDANCE WITH 717.3.2.1 THROUGH 717.3.2.4. FIRE DAMPERS SHALL HAVE THE MINIMUM FIRE PROTECTIONS RATING SPECIFIED IN TABLE 717.3.2.1 FOR TYPES OF PENETRATION.
10. FOR CEILING HEIGHTS SEE ARCHITECTURAL DRAWINGS.
11. ALL ENVIRONMENTAL AIR VENTS SHALL BE EQUIPPED WITH BACK-DRAFT DAMPERS (SECTION 504.0 CMC).
12. UNLESS NOTED DIFFERENTLY ON THE PLANS, ALL SUPPLY REGISTERS SHALL BE BAR TYPE (TRUAIRE TYPE 210, 220, 230, OR SIMILAR) WITH TOTAL PRESSURE LOSS LESS THAN 0.025 in.w.g. ALL SUPPLY REGISTERS SHALL BE INSTALLED WITH DAMPERS CAPABLE TO ADJUST THE AIRFLOW AND AIR BALANCE WHOLE SYSTEM TO MEET THE DESIGNED PARAMETERS.
13. THE FLUE DUCT FOR SEALED COMBUSTION WATER HEATER IS SIDE-WAL DISCHARGE. 3 FEET AWAY FROM OPENINGS INTO THE BUILDING AND 5' AWAY FROM THE PROPERTY LINE. SEE CIVIL DRAWINGS FOR PROPERTY LINE DETAILS.
14. IF HUMIDISTAT IS REQUIRED, LOCATE IT ADJACENT TO THERMOSTAT OR INTEGRATED IN EXHAUST FAN.
15. "REGISTERED' COPY OF THE CF-2R FORMS SHALL BE SUBMITTED PRIOR TO FINAL INSPECTION, SIGNED BY HERS RATER, FOR FIELD VERIFICATION AND DIAGNOSTIC TESTING.
16. WHEN LOCAL EXHAUST FANS ARE USED FOR "CONTINUOUS" WHOLE BUILDING VENTILATION, READILY ACCESSIBLE SWITCH SHALL BE PROVIDED AS AN OVERRIDE CONTROL (SECTION 4.4 ASHRAE 62.2). FAN SHALL OPERATE AT ALL TIMES WHEN UNIT IS OCCUPIED. LABEL SHALL BE PROVIDED INDICATING SYSTEM'S FUNCTION. FOLLOWING OR EQUIVALENT TEXT SHALL BE DISPLAYED:

    "THIS SWITCH CONTROLS THE INDOOR AIR QUALITY VENTILATION FOR THE HOME. LEAVE IT ON AT ALL TIMES WHEN HOME IS OCCUPIED UNLESS THE OUTDOOR AIR QUALITY IS VERY POOR. "
17. CONTRACTOR TO VERIFY INSTALLED DRYER LENGTHS AND NUMBER OF ELBOWS ON FIELD.
18. PER 2019 CEC FOR MULTIFAMILY LOW-RISE AND HIGH-RISE RESIDENTIAL BUILDINGS, CONTINUOUSLY OPERATED EXHAUST ONLY OR SUPPLY ONLY VENTILATION APPROACH SHALL BE ALLOWED TO BE USED TO PROVIDE THE REQUIRED UNIT VENTILATION AIRFLOW IF ENVELOPE LEAKAGE IS LESS THAN OR EQUAL TO 0.3 CFM AT 50 Pa PER SQUARE FOOT OF DWELLING UNIT ENVELOPE SURFACE. THIS REQUIREMENT SHALL BE FIELD TESTED AND VERIFIED (BLOWER DOOR TEST). THIS IS TO BE USED AS AN ALTERNATIVE TO BALANCED VENTILATION REQUIREMENT PER CEC. 120.1(b)2A iv AND 150.0(o)1C. WHEN THIS OPTION IS SELECTED BY DEVELOPER, GC WILL MAKE SURE THAT ALL NECESSARY BUILDING TECHNIQUES HAVE BEEN USED TO MEET THE LEAKAGE REQUIREMENTS.

HVAC KEY NOTES

1. CAP SHOULD BE LISTED FOR CLOTHES DRYER VENTING (DRYER JACK). DRYER MOISTURE DUCT SHALL BE EQUIPPED WITH BACK DRAFT DAMPER. DRYER MOISTURE DUCT SHALL BE MADE OUT OF METAL WITH SMOOTH INTERIOR FACE. LISTED CONNECTOR SHALL BE MAX. 6 FT. LONG.
2. PROVIDE RS/RL PIPING SIZE PER MANUFACTURER'S GUIDELINES. ROUTE FROM REMOTE CONDENSATE UNIT TO AIR HANDLER (FURNACE, FAN COIL ETC).
3. RUN 3/4" PRIMARY CONDENSATE LINE TO THE LAVATORY TAILPIECE. SECONDARY CONDENSATE TO DRAIN TO THE EXTERIOR ABOVE A WINDOW. OPTIONALLY USE OVERFLOW SWITCH. COORDINATE WITH THE PLUMBER. WHEN CONDENSATE LIFT IS REQUIRED USE CONDENSATE PUMPS.
4. EXHAUST VENT PIPE UP THRU ROOF, INSTALLED PER MANUFACTURER GUIDELINES. ROUTING AND TERMINATION OF VENT FOR HEATING UNIT SHALL COMPLY WITH CH. 8, CMC 2019.
5. PROVIDE WHOLE HOUSE EXHAUST FAN PER 2019 ENERGY CODE SECTION 150(O). SEE HVAC GENERAL NOTE #16 ABOVE FOR CONTROLS.
6. CONNECT KITCHEN HOOD (MIN. 100 CFM) TO 6"Ø KITCHEN HOOD EXHAUST AIR DUCT (MIN. 6"Ø)
7. EXHAUST OUTLET TERMINATES 3' AWAY FROM OPENINGS INTO THE BUILDING AND 3' AWAY FROM THE PROPERTY LINE. SEE CIVIL DRAWINGS FOR PROPERTY LINE DETAILS.
8. PROVIDE FLUE DUCT FOR WATER HEATER. INSTALLED PER MANUFACTURER'S INSTALLATION MANUAL.
9. PROVIDE OPENING NOT LESS THAN 100 SQ. IN. FREE NET AREA FOR DRYER MAKEUP AIR PER CMC 2019 (504.4.1)
10. PROVIDE DOOR UNDERCUT
11. 6"Ø EA DUCT UP THRU ROOF W/ CAP.
12. 4"Ø LINT DUCT UP THRU ROOF W/ CAP
13. ROUTE ALL 3RD FLOOR EXHAUST DUCT THROUGH ROOF.
14. PROVIDE GENERAL EXHAUST OPENINGS TERMINATING TO THE OUTDOORS WITH A PROTECTIVE CORROSION-RESISTANT SCREEN HAVING NOT LESS THAN ¼ OF AN INCH OPENINGS, AND NOT MORE THAN ½ OF AN INCH OPENINGS IN ACCORDANCE WITH CMC 502.1. EXCEPT CLOTH DRYER.
15. PROVIDE A 5"Ø LINT DUCT FOR THE DRYER VENT. A PLACARD IS TO BE ADDED TO SPECIFY 34 FEET IS THE LIMITING LENGTH FOR A 5"Ø DRYER VENT PER DETAIL #11 ON SHEET MD-2.

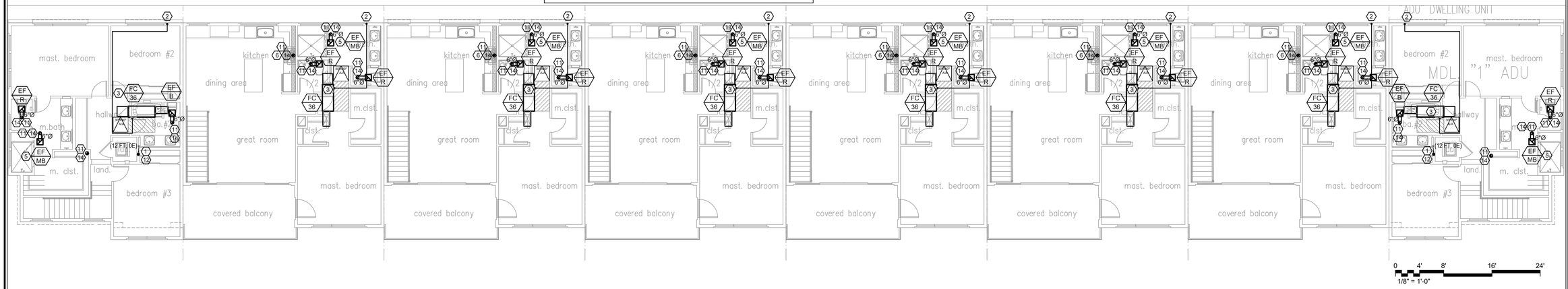

SECOND FLOOR PLAN 2

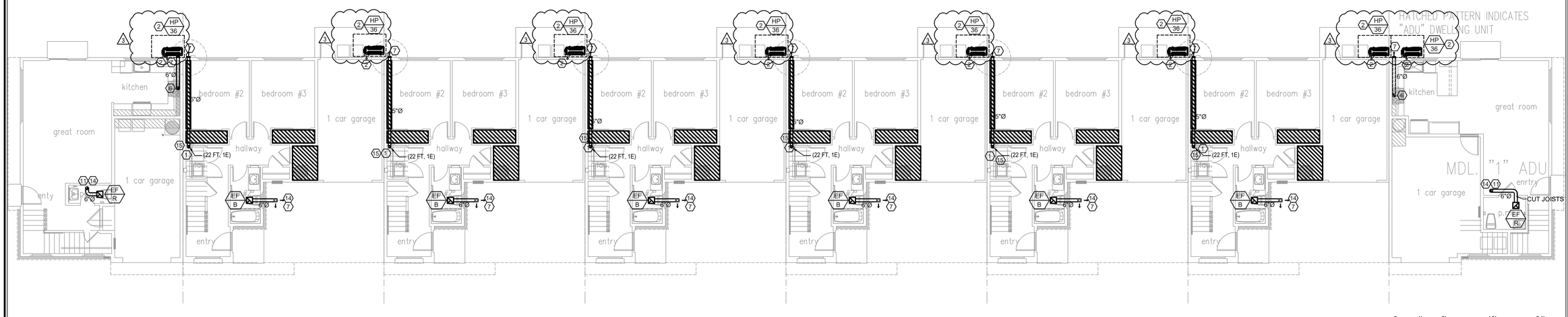

FIRST FLOOR PLAN 1

ISSUED DATE:XX/XX/XX

GOUVIS engineering consulting group, inc.

15 Studebaker
Irvine
CA 92618

Irvine
tel 949.752.1612
fax 949.752.5321

Palm Springs
tel 760.323.5090

REGISTERED PROFESSIONAL ENGINEER
RADE BABIC
No. M38573
MECHANICAL
STATE OF CALIFORNIA

DATE SIGNED: 1/30/24

RESTRICTIVE NOTICE

THESE DESIGNS, DRAWINGS, AND SPECIFICATIONS ARE THE EXCLUSIVE PROPERTY OF GOUVIS ENGINEERING CONSULTING GROUP. THEY ARE THE SUBJECTOF COPYRIGHT AND OTHER LEGAL PROTECTION. THEY MAY BE USED ONLY BY THEIR INTENDED RECIPIENT AND ONLY FOR THE PROJECT DEPICTED HEREIN. NO PART OF THESE DRAWINGS ARE TO BE COPIED, TRANSFERRED, REPRODUCED, NOR CAN THEY BE USED, IN WHOLE OR IN PART, BY ANY OTHER PERSON OR FOR ANY OTHER PROJECT OR STRUCTURE, WITHOUT THE PRIOR EXPRESS WRITTEN CONSENT OF GOUVIS ENGINEERING CONSULTING GROUP

© 2017 GOUVIS ENGINEERING CONSULTING GROUP INC. - ALL RIGHTS RESERVED

PROJECT:
Tenant Square

DEVELOPER:
Osito Holdings LLC

ARCHITECT:
Gary Moore & Associates

LOCATION:
Morgan Hill
Santa Clara
CA

REVISIONS

NO.	DATE	DESCRIPTION
1	02/02/23	PLAN CHECK
2	11/01/23	PLAN CHECK
3	01/30/24	FIRE COMMENT

SHEET NAME:
BUILDING A
FLOOR PLANS

PROJECT NUMBER:
66074

ENGINEER:

DRAFTER:

SHEET NUMBER:
M-2.1

HVAC GENERAL NOTES

1. REFER TO DRAWING M-0.1 FOR LEGENDS, SYMBOLS, ABBREVIATIONS & GENERAL NOTES.
2. REFER TO DRAWING M-0.2 FOR EQUIPMENT SCHEDULES.
3. REFER TO MD SHEETS FOR MECHANICAL DETAILS.
4. DUCT INSULATION R VALUES SHALL BE PER REGISTERED T24 COMPLIANCE DOCUMENTATION. COORDINATE EXACT ROUTING OF DUCTWORK WITH STRUCTURAL AND ALL OTHER TRADES, ROUTING SHOWN IS SCHEMATIC ONLY.
5. PROVIDE CAN AND DUCT COLLAR AS REQUIRED FOR ALL GRILLES AND DIFFUSERS.
6. OPENINGS IN THE ROOF SHALL NOT BE LOCATED WITHIN 5 FEET (1,524 MM) OF THE 1-HOUR FIRE-RESISTANCE-RATED EXTERIOR WALL FOR GROUPS R AND U AND 10 FEET (3,048 MM) OR OTHER OCCUPANCIES, MEASURED FROM THE INTERIOR SIDE OF THE WALL. (CBC 705.11.4.3).
7. FOR DOMESTIC DRYERS PROVIDE A MINIMUM OF 100 SQ. IN FREE AREA OPENING(S) INTO LAUNDRY ROOM FOR MAKE-UP AIR AS REQUIRED BY CODE (CMC 504.4.1). FOR TYPE 2 (COMMERCIAL DRYERS) MAKEUP AIR SHALL BE PROVIDED WITH AREA NOT LESS THAN 1 SQ.IN. FOR EACH 1000 BTUH OF TOTAL INPUT RATING OF THE DRYERS INSTALLED.
8. FIRE SEAL ALL PENETRATIONS AS REQUIRED BY CODE.
9. FIRE DAMPER RATINGS SHALL BE IN ACCORDANCE WITH 717.3.2.1 THROUGH 717.3.2.4. FIRE DAMPERS SHALL HAVE THE MINIMUM FIRE PROTECTIONIS RATING SPECIFIED IN TABLE 717.3.2.1 FOR TYPES OF PENETRATION.
10. FOR CEILING HEIGHTS SEE ARCHITECTURAL DRAWINGS.
11. ALL ENVIRONMENTAL AIR VENTS SHALL BE EQUIPPED WITH BACK-DRAFT DAMPERS (SECTION 504.0 CMC).
12. UNLESS NOTED DIFFERENTLY ON THE PLANS, ALL SUPPLY REGISTERS SHALL BE BAR TYPE (TRUAIRE TYPE 210, 220, 230, OR SIMILAR) WITH TOTAL PRESSURE LOSS LESS THAN. 0.025 in.w.g. ALL SUPPLY REGISTERS SHALL BE INSTALLED WITH DAMPERS CAPABLE TO ADJUST THE AIRFLOW AND AIR BALANCE WHOLE SYSTEM TO MEET THE DESIGNED PARAMETERS.
13. THE FLUE DUCT FOR SEALED COMBUSTION WATER HEATER IS SIDE-WAL DISCHARGE. 3 FEET AWAY FROM OPENINGS INTO THE BUILDING AND 5' AWAY FROM THE PROPERTY LINE. SEE CIVIL DRAWINGS FOR PROPERTY LINE DETAILS.
14. IF HUMIDISTAT IS REQUIRED, LOCATE IT ADJACENT TO THERMOSTAT OR INTEGRATED IN EXHAUST FAN.
15. "REGISTERED' COPY OF THE CF-2R FORMS SHALL BE SUBMITTED PRIOR TO FINAL INSPECTION, SIGNED BY HERS RATER, FOR FIELD VERIFICATION AND DIAGNOSTIC TESTING.
16. WHEN LOCAL EXHAUST FANS ARE USED FOR "CONTINUOUS" WHOLE BUILDING VENTILATION, READILY ACCESSIBLE SWITCH SHALL BE PROVIDED AS AN OVERRIDE CONTROL (SECTION 4.4 ASHRAE 62.2). FAN SHALL OPERATE AT ALL TIMES WHEN UNIT IS OCCUPIED. LABEL SHALL BE PROVIDED INDICATING SYSTEM'S FUNCTION. FOLLOWING OR EQUIVALENT TEXT SHALL BE DISPLAYED:

    "THIS SWITCH CONTROLS THE INDOOR AIR QUALITY VENTILATION FOR THE HOME. LEAVE IT ON AT ALL TIMES WHEN HOME IS OCCUPIED UNLESS THE OUTDOOR AIR QUALITY IS VERY POOR. "
17. CONTRACTOR TO VERIFY INSTALLED DRYER LENGTHS AND NUMBER OF ELBOWS ON FIELD.
18. PER 2019 CEC FOR MULTIFAMILY LOW-RISE AND HIGH-RISE RESIDENTIAL BUILDINGS, CONTINUOUSLY OPERATED EXHAUST ONLY OR SUPPLY ONLY VENTILATION APPROACH SHALL BE ALLOWED TO BE USED TO PROVIDE THE REQUIRED UNIT VENTILATION AIRFLOW IF ENVELOPE LEAKAGE IS LESS THAN OR EQUAL TO 0.3 CFM AT 50 Pa PER SQUARE FOOT OF DWELLING UNIT ENVELOPE SURFACE. THIS REQUIREMENT SHALL BE FIELD TESTED AND VERIFIED (BLOWER DOOR TEST). THIS IS TO BE USED AS AN ALTERNATIVE TO BALANCED VENTILATION REQUIREMENT PER CEC. 120.1(b)2A iv AND 150.0(o)1C. WHEN THIS OPTION IS SELECTED BY DEVELOPER, GC WILL MAKE SURE THAT ALL NECESSARY BUILDING TECHNIQUES HAVE BEEN USED TO MEET THE LEAKAGE REQUIREMENTS.

HVAC KEY NOTES

1. CAP SHOULD BE LISTED FOR CLOTHES DRYER VENTING (DRYER JACK). DRYER MOISTURE DUCT SHALL BE EQUIPPED WITH BACK DRAFT DAMPER. DRYER MOISTURE DUCT SHALL BE MADE OUT OF METAL WITH SMOOTH INTERIOR FACE. LISTED CONNECTOR SHALL BE MAX. 6 FT. LONG.
2. PROVIDE RS/RL PIPING SIZE PER MANUFACTURER'S GUIDELINES. ROUTE FROM REMOTE CONDENSATE UNIT TO AIR HANDLER (FURNACE, FAN COIL ETC).
3. RUN 3/4" PRIMARY CONDENSATE LINE TO THE LAVATORY TAILPIECE. SECONDARY CONDENSATE TO DRAIN TO THE EXTERIOR ABOVE A WINDOW. OPTIONALLY USE OVERFLOW SWITCH. COORDINATE WITH THE PLUMBER. WHEN CONDENSATE LIFT IS REQUIRED USE CONDENSATE PUMPS.
4. EXHAUST VENT PIPE UP THRU ROOF, INSTALLED PER MANUFACTURER GUIDELINES. ROUTING AND TERMINATION OF VENT FOR HEATING UNIT SHALL COMPLY WITH CH. 8, CMC 2019.
5. PROVIDE WHOLE HOUSE EXHAUST FAN PER 2019 ENERGY CODE SECTION 150(O). SEE HVAC GENERAL NOTE #16 ABOVE FOR CONTROLS.
6. CONNECT KITCHEN HOOD (MIN. 100 CFM) TO 6"Ø KITCHEN HOOD EXHAUST AIR DUCT (MIN. 6"Ø)
7. EXHAUST OUTLET TERMINATES 3' AWAY FROM OPENINGS INTO THE BUILDING AND 3' AWAY FROM THE PROPERTY LINE. SEE CIVIL DRAWINGS FOR PROPERTY LINE DETAILS.
8. PROVIDE FLUE DUCT FOR WATER HEATER. INSTALLED PER MANUFACTURER'S INSTALLATION MANUAL.
9. PROVIDE OPENING NOT LESS THAN 100 SQ. IN. FREE NET AREA FOR DRYER MAKEUP AIR PER CMC 2019 (504.4.1)
10. PROVIDE DOOR UNDERCUT
11. 6"Ø EA DUCT UP THRU ROOF W/ CAP.
12. 4"Ø LINT DUCT UP THRU ROOF W/ CAP
13. ROUTE ALL 3RD FLOOR EXHAUST DUCT THROUGH ROOF.
14. PROVIDE GENERAL EXHAUST OPENINGS TERMINATING TO THE OUTDOORS WITH A PROTECTIVE CORROSION-RESISTANT SCREEN HAVING NOT LESS THAN ¼ OF AN INCH OPENINGS, AND NOT MORE THAN ½ OF AN INCH OPENINGS IN ACCORDANCE WITH CMC 502.1. EXCEPT CLOTH DRYER.
15. PROVIDE A 5"Ø LINT DUCT FOR THE DRYER VENT. A PLACARD IS TO BE ADDED TO SPECIFY 34 FEET IS THE LIMITING LENGTH FOR A 5"Ø DRYER VENT PER DETAIL #11 ON SHEET MD-2.

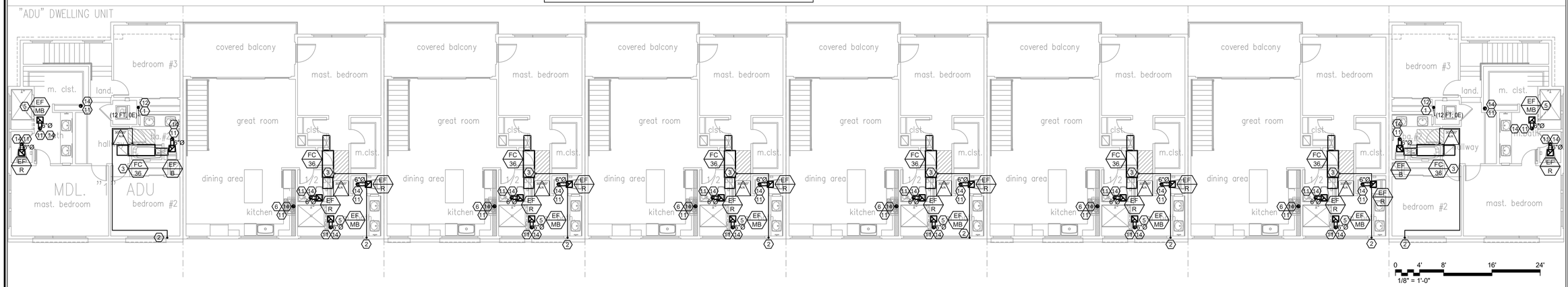

SECOND FLOOR PLAN 2

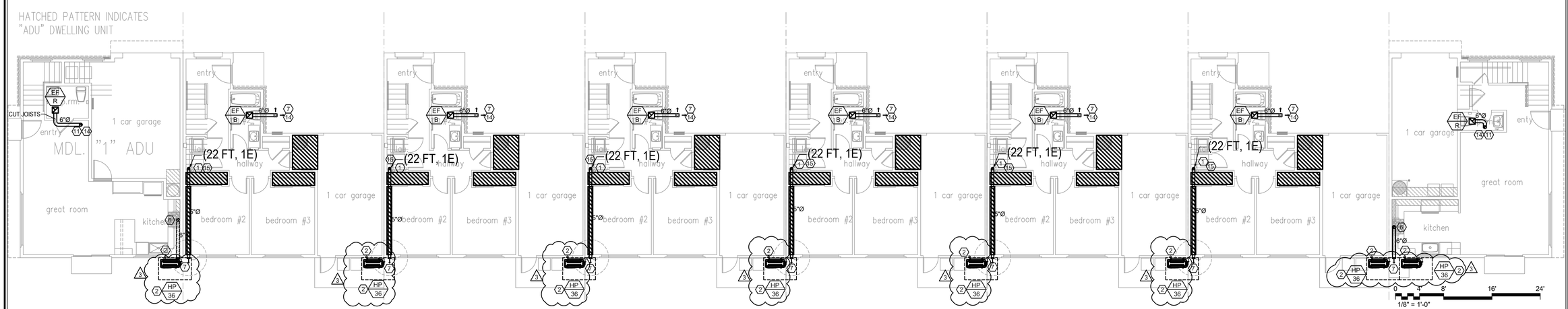

FIRST FLOOR PLAN 1

GOUVIS engineering consulting group, inc.

15 Studebaker
Irvine
CA 92618

Irvine
tel 949.752.1612
fax 949.752.5321

Palm Springs
tel 760.323.5090

REGISTERED PROFESSIONAL ENGINEER
RADE BABIC
No. M38573
MECHANICAL
STATE OF CALIFORNIA

DATE SIGNED: 1/30/24

RESTRICTIVE NOTICE

THESE DESIGNS, DRAWINGS, AND SPECIFICATIONS ARE THE EXCLUSIVE PROPERTY OF GOUVIS ENGINEERING CONSULTING GROUP. THEY ARE THE SUBJECTOF COPYRIGHT AND OTHER LEGAL PROTECTION. THEY MAY BE USED ONLY BY THEIR INTENDED RECIPIENT AND ONLY FOR THE PROJECT DEPICTED HEREIN. NO PART OF THESE DRAWINGS ARE TO BE COPIED, TRANSFERRED, REPRODUCED, NOR CAN THEY BE USED, IN WHOLE OR IN PART, BY ANY OTHER PERSON OR FOR ANY OTHER PROJECT OR STRUCTURE, WITHOUT THE PRIOR EXPRESS WRITTEN CONSENT OF GOUVIS ENGINEERING CONSULTING GROUP

© 2017 GOUVIS ENGINEERING CONSULTING GROUP INC. - ALL RIGHTS RESERVED

PROJECT:
Tenant Square

DEVELOPER:
Osito Holdings LLC

ARCHITECT:
Gary Moore & Associates

LOCATION:
Morgan Hill
Santa Clara
CA

REVISIONS

NO.	DATE	DESCRIPTION
1	02/02/23	PLAN CHECK
2	11/01/23	PLAN CHECK
3	01/30/24	FIRE COMMENT

SHEET NAME:
BUILDING B
FLOOR PLANS

PROJECT NUMBER:
66074

ENGINEER:

DRAFTER:

SHEET NUMBER:
M-2.2

ISSUED DATE: XX/XX/XX

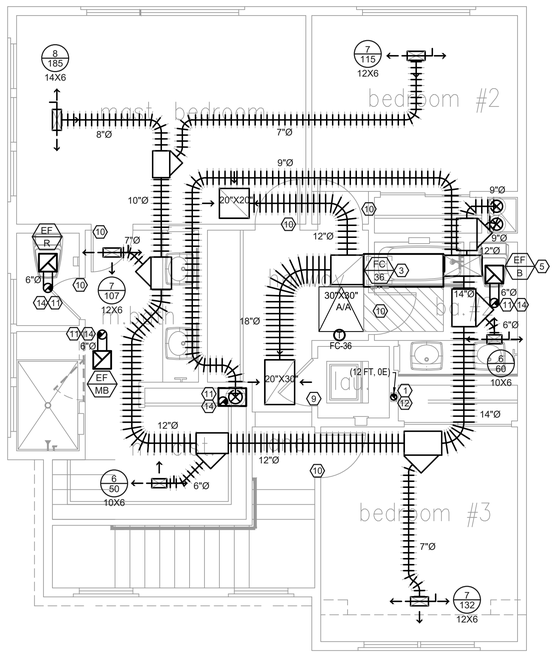

SECOND FLOOR PLAN - UNIT A - ADU | 4

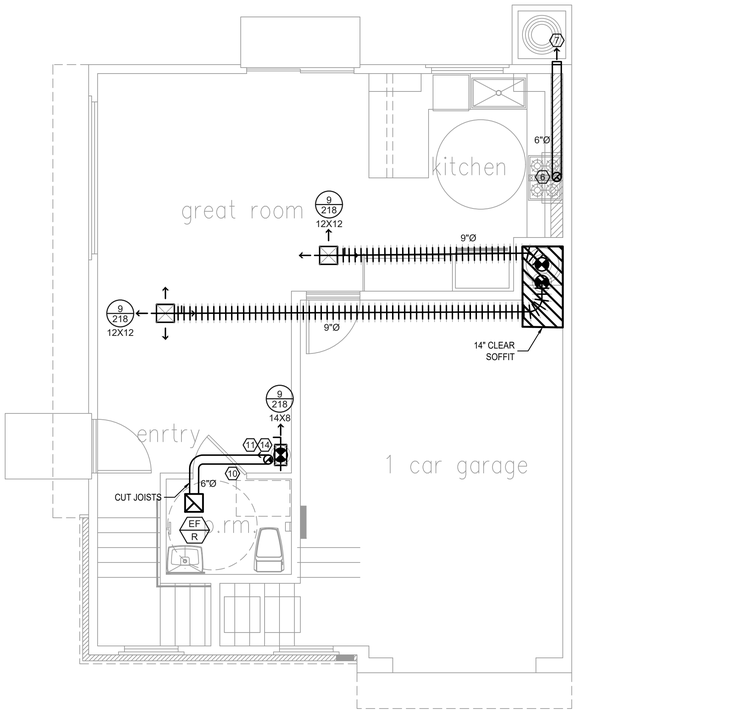

0 2' 4' 8' 12'
1/4" = 1'-0"

FIRST FLOOR PLAN - UNIT A - ADU | 3

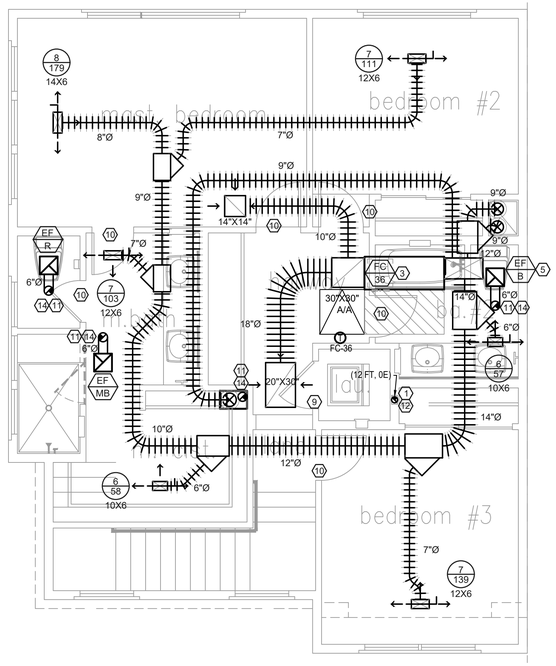

0 2' 4' 8' 12'
1/4" = 1'-0"

SECOND FLOOR PLAN - UNIT A | 2

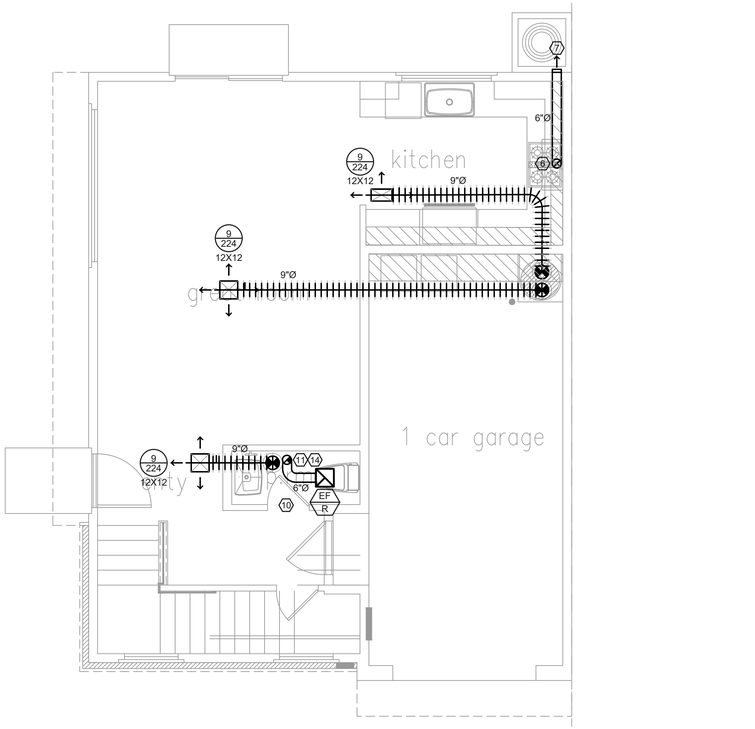

0 2' 4' 8' 12'
1/4" = 1'-0"

FIRST FLOOR PLAN - UNIT A | 1

HVAC GENERAL NOTES

1. REFER TO DRAWING M-0.1 FOR LEGENDS, SYMBOLS, ABBREVIATIONS & GENERAL NOTES.
2. REFER TO DRAWING M-0.2 FOR EQUIPMENT SCHEDULES.
3. REFER TO MD SHEETS FOR MECHANICAL DETAILS.
4. DUCT INSULATION R VALUES SHALL BE PER REGISTERED T24 COMPLIANCE DOCUMENTATION. COORDINATE EXACT ROUTING OF DUCTWORK WITH STRUCTURAL AND ALL OTHER TRADES, ROUTING SHOWN IS SCHEMATIC ONLY.
5. PROVIDE CAN AND DUCT COLLAR AS REQUIRED FOR ALL GRILLES AND DIFFUSERS.
6. OPENINGS IN THE ROOF SHALL NOT BE LOCATED WITHIN 5 FEET (1,524 MM) OF THE 1-HOUR FIRE-RESISTANCE-RATED EXTERIOR WALL FOR GROUPS R AND U AND 10 FEET (3,048 MM) OR OTHER OCCUPANCIES, MEASURED FROM THE INTERIOR SIDE OF THE WALL. (CBC 705.11.4.3).
7. FOR DOMESTIC DRYERS PROVIDE A MINIMUM OF 100 SQ. IN FREE AREA OPENING(S) INTO LAUNDRY ROOM FOR MAKE-UP AIR AS REQUIRED BY CODE (CMC 504.4.1). FOR TYPE 2 (COMMERCIAL DRYERS) MAKEUP AIR SHALL BE PROVIDED WITH AREA NOT LESS THAN 1 SQ.IN. FOR EACH 1000 BTUH OF TOTAL INPUT RATING OF THE DRYERS INSTALLED.
8. FIRE SEAL ALL PENETRATIONS AS REQUIRED BY CODE.
9. FIRE DAMPER RATINGS SHALL BE IN ACCORDANCE WITH 717.3.2.1 THROUGH 717.3.2.4. FIRE DAMPERS SHALL HAVE THE MINIMUM FIRE PROTECTIONS RATING SPECIFIED IN TABLE 717.3.2.1 FOR TYPES OF PENETRATION.
10. FOR CEILING HEIGHTS SEE ARCHITECTURAL DRAWINGS.
11. ALL ENVIRONMENTAL AIR VENTS SHALL BE EQUIPPED WITH BACK-DRAFT DAMPERS (SECTION 504.0 CMC).
12. UNLESS NOTED DIFFERENTLY ON THE PLANS, ALL SUPPLY REGISTERS SHALL BE BAR TYPE (TRUAIRE TYPE 210, 220, 230, OR SIMILAR) WITH TOTAL PRESSURE LOSS LESS THAN 0.025 in.w.g. ALL SUPPLY REGISTERS SHALL BE INSTALLED WITH DAMPERS CAPABLE TO ADJUST THE AIRFLOW AND AIR BALANCE WHOLE SYSTEM TO MEET THE DESIGNED PARAMETERS.
13. THE FLUE DUCT FOR SEALED COMBUSTION WATER HEATER IS SIDE-WAL DISCHARGE. 3 FEET AWAY FROM OPENINGS INTO THE BUILDING AND 5' AWAY FROM THE PROPERTY LINE. SEE CIVIL DRAWINGS FOR PROPERTY LINE DETAILS.
14. IF HUMIDISTAT IS REQUIRED, LOCATE IT ADJACENT TO THERMOSTAT OR INTEGRATED IN EXHAUST FAN.
15. "REGISTERED' COPY OF THE CF-2R FORMS SHALL BE SUBMITTED PRIOR TO FINAL INSPECTION, SIGNED BY HERS RATER, FOR FIELD VERIFICATION AND DIAGNOSTIC TESTING.
16. WHEN LOCAL EXHAUST FANS ARE USED FOR "CONTINUOUS" WHOLE BUILDING VENTILATION, READILY ACCESSIBLE SWITCH SHALL BE PROVIDED AS AN OVERRIDE CONTROL (SECTION 4.4 ASHRAE 62.2). FAN SHALL OPERATE AT ALL TIMES WHEN UNIT IS OCCUPIED. LABEL SHALL BE PROVIDED INDICATING SYSTEM'S FUNCTION. FOLLOWING OR EQUIVALENT TEXT SHALL BE DISPLAYED:

    "THIS SWITCH CONTROLS THE INDOOR AIR QUALITY VENTILATION FOR THE HOME. LEAVE IT ON AT ALL TIMES WHEN HOME IS OCCUPIED UNLESS THE OUTDOOR AIR QUALITY IS VERY POOR. "
17. CONTRACTOR TO VERIFY INSTALLED DRYER LENGTHS AND NUMBER OF ELBOWS ON FIELD.
18. PER 2019 CEC FOR MULTIFAMILY LOW-RISE AND HIGH-RISE RESIDENTIAL BUILDINGS, CONTINUOUSLY OPERATED EXHAUST ONLY OR SUPPLY ONLY VENTILATION APPROACH SHALL BE ALLOWED TO BE USED TO PROVIDE THE REQUIRED UNIT VENTILATION AIRFLOW IF ENVELOPE LEAKAGE IS LESS THAN OR EQUAL TO 0.3 CFM AT 50 Pa PER SQUARE FOOT OF DWELLING UNIT ENVELOPE SURFACE. THIS REQUIREMENT SHALL BE FIELD TESTED AND VERIFIED (BLOWER DOOR TEST). THIS IS TO BE USED AS AN ALTERNATIVE TO BALANCED VENTILATION REQUIREMENT PER CEC. 120.1(b)2A iv AND 150.0(o)1C. WHEN THIS OPTION IS SELECTED BY DEVELOPER, GC WILL MAKE SURE THAT ALL NECESSARY BUILDING TECHNIQUES HAVE BEEN USED TO MEET THE LEAKAGE REQUIREMENTS.

HVAC KEY NOTES

1. CAP SHOULD BE LISTED FOR CLOTHES DRYER VENTING (DRYER JACK). DRYER MOISTURE DUCT SHALL BE EQUIPPED WITH BACK DRAFT DAMPER. DRYER MOISTURE DUCT SHALL BE MADE OUT OF METAL WITH SMOOTH INTERIOR FACE. LISTED CONNECTOR SHALL BE MAX. 6 FT. LONG.
2. PROVIDE RS/RL PIPING SIZE PER MANUFACTURER'S GUIDELINES. ROUTE FROM REMOTE CONDENSATE UNIT TO AIR HANDLER (FURNACE, FAN COIL ETC).
3. RUN 3/4" PRIMARY CONDENSATE LINE TO THE LAVATORY TAILPIECE. SECONDARY CONDENSATE TO DRAIN TO THE EXTERIOR ABOVE A WINDOW. OPTIONALLY USE OVERFLOW SWITCH. COORDINATE WITH THE PLUMBER. WHEN CONDENSATE LIFT IS REQUIRED USE CONDENSATE PUMPS.
4. EXHAUST VENT PIPE UP THRU ROOF, INSTALLED PER MANUFACTURER GUIDELINES. ROUTING AND TERMINATION OF VENT FOR HEATING UNIT SHALL COMPLY WITH CH. 8, CMC 2019.
5. PROVIDE WHOLE HOUSE EXHAUST FAN PER 2019 ENERGY CODE SECTION 150(O). SEE HVAC GENERAL NOTE #16 ABOVE FOR CONTROLS.
6. CONNECT KITCHEN HOOD (MIN. 100 CFM) TO 6"Ø KITCHEN HOOD EXHAUST AIR DUCT (MIN. 6"Ø)
7. EXHAUST OUTLET TERMINATES 3' AWAY FROM OPENINGS INTO THE BUILDING AND 3' AWAY FROM THE PROPERTY LINE. SEE CIVIL DRAWINGS FOR PROPERTY LINE DETAILS.
8. PROVIDE FLUE DUCT FOR WATER HEATER. INSTALLED PER MANUFACTURER'S INSTALLATION MANUAL.
9. PROVIDE OPENING NOT LESS THAN 100 SQ. IN. FREE NET AREA FOR DRYER MAKEUP AIR PER CMC 2019 (504.4.1)
10. PROVIDE DOOR UNDERCUT
11. 6"Ø EA DUCT UP THRU ROOF W/ CAP.
12. 4"Ø LINT DUCT UP THRU ROOF W/ CAP
13. ROUTE ALL 3RD FLOOR EXHAUST DUCT THROUGH ROOF.
14. PROVIDE GENERAL EXHAUST OPENINGS TERMINATING TO THE OUTDOORS WITH A PROTECTIVE CORROSION-RESISTANT SCREEN HAVING NOT LESS THAN ¼ OF AN INCH OPENINGS, AND NOT MORE THAN ½ OF AN INCH OPENINGS IN ACCORDANCE WITH CMC 502.1. EXCEPT CLOTH DRYER.
15. PROVIDE A 5"Ø LINT DUCT FOR THE DRYER VENT. A PLACARD IS TO BE ADDED TO SPECIFY 34 FEET IS THE LIMITING LENGTH FOR A 5"Ø DRYER VENT PER DETAIL #11 ON SHEET MD-2.

ISSUED DATE: XX/XX/XX

GOUVIS engineering consulting group, inc.
15 Studebaker
Irvine
CA 92618

Irvine
tel 949.752.1612
fax 949.752.5321

Palm Springs
tel 760.323.5090

REGISTERED PROFESSIONAL ENGINEER
RADE BABIC
No. M38573
MECHANICAL
STATE OF CALIFORNIA

DATE SIGNED: 1/30/24

RESTRICTIVE NOTICE

THESE DESIGNS, DRAWINGS, AND SPECIFICATIONS ARE THE EXCLUSIVE PROPERTY OF GOUVIS ENGINEERING CONSULTING GROUP. THEY ARE THE SUBJECTOF COPYRIGHT AND OTHER LEGAL PROTECTION. THEY MAY BE USED ONLY BY THEIR INTENDED RECIPIENT AND ONLY FOR THE PROJECT DEPICTED HEREIN. NO PART OF THESE DRAWINGS ARE TO BE COPIED, TRANSFERRED, REPRODUCED, NOR CAN THEY BE USED, IN WHOLE OR IN PART, BY ANY OTHER PERSON OR FOR ANY OTHER PROJECT OR STRUCTURE, WITHOUT THE PRIOR EXPRESS WRITTEN CONSENT OF GOUVIS ENGINEERING CONSULTING GROUP

© 2017 GOUVIS ENGINEERING CONSULTING GROUP INC. - ALL RIGHTS RESERVED

PROJECT:
Tenant Square

DEVELOPER:
Osito Holdings LLC

ARCHITECT:
Gary Moore & Associates

1A.DWG

LOCATION:
Morgan Hill
Santa Clara
CA

REVISIONS

NO.	DATE	DESCRIPTION
1	02/02/23	PLAN CHECK
2	11/01/23	PLAN CHECK
3	01/30/24	FIRE COMMENT

SHEET NAME:
UNIT A & A - ADU
FLOOR PLANS

PROJECT NUMBER:
66074

ENGINEER:

DRAFTER:

SHEET NUMBER:
M-3.1

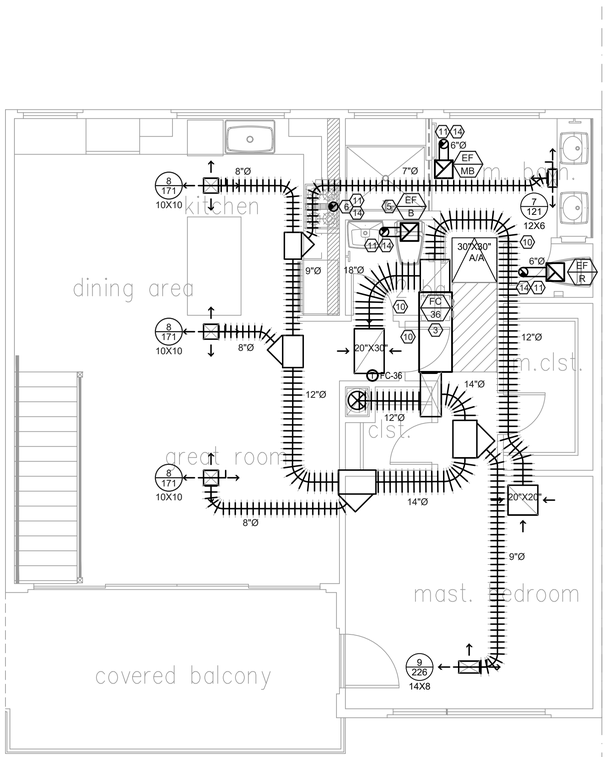

0 2' 4' 8' 12'
1/4" = 1'-0"

SECOND FLOOR PLAN - UNIT B 2

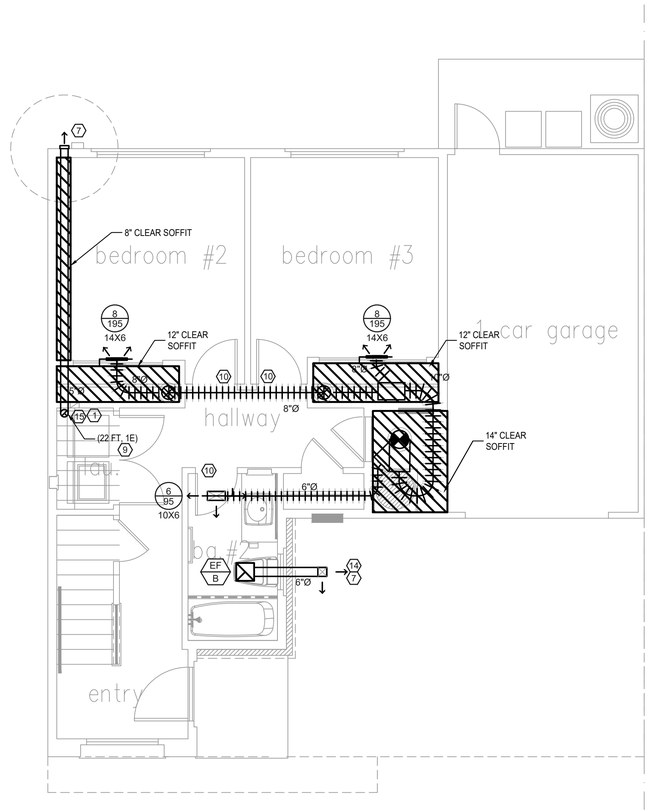

0 2' 4' 8' 12'
1/4" = 1'-0"

FIRST FLOOR PLAN - UNIT B 1

HVAC GENERAL NOTES

1. REFER TO DRAWING M-0.1 FOR LEGENDS, SYMBOLS, ABBREVIATIONS & GENERAL NOTES.
2. REFER TO DRAWING M-0.2 FOR EQUIPMENT SCHEDULES.
3. REFER TO MD SHEETS FOR MECHANICAL DETAILS.
4. DUCT INSULATION R VALUES SHALL BE PER REGISTERED T24 COMPLIANCE DOCUMENTATION. COORDINATE EXACT ROUTING OF DUCTWORK WITH STRUCTURAL AND ALL OTHER TRADES, ROUTING SHOWN IS SCHEMATIC ONLY.
5. PROVIDE CAN AND DUCT COLLAR AS REQUIRED FOR ALL GRILLES AND DIFFUSERS.
6. OPENINGS IN THE ROOF SHALL NOT BE LOCATED WITHIN 5 FEET (1,524 MM) OF THE 1-HOUR FIRE-RESISTANCE-RATED EXTERIOR WALL FOR GROUPS R AND U AND 10 FEET (3,048 MM) OR OTHER OCCUPANCIES, MEASURED FROM THE INTERIOR SIDE OF THE WALL. (CBC 705.11.4.3).
7. FOR DOMESTIC DRYERS PROVIDE A MINIMUM OF 100 SQ. IN FREE AREA OPENING(S) INTO LAUNDRY ROOM FOR MAKE-UP AIR AS REQUIRED BY CODE (CMC 504.4.1). FOR TYPE 2 (COMMERCIAL DRYERS) MAKEUP AIR SHALL BE PROVIDED WITH AREA NOT LESS THAN 1 SQ.IN. FOR EACH 1000 BTUH OF TOTAL INPUT RATING OF THE DRYERS INSTALLED.
8. FIRE SEAL ALL PENETRATIONS AS REQUIRED BY CODE.
9. FIRE DAMPER RATINGS SHALL BE IN ACCORDANCE WITH 717.3.2.1 THROUGH 717.3.2.4. FIRE DAMPERS SHALL HAVE THE MINIMUM FIRE PROTECTIONS RATING SPECIFIED IN TABLE 717.3.2.1 FOR TYPES OF PENETRATION.
10. FOR CEILING HEIGHTS SEE ARCHITECTURAL DRAWINGS.
11. ALL ENVIRONMENTAL AIR VENTS SHALL BE EQUIPPED WITH BACK-DRAFT DAMPERS (SECTION 504.0 CMC).
12. UNLESS NOTED DIFFERENTLY ON THE PLANS, ALL SUPPLY REGISTERS SHALL BE BAR TYPE (TRUAIRE TYPE 210, 220, 230, OR SIMILAR) WITH TOTAL PRESSURE LOSS LESS THAN 0.025 in.w.g. ALL SUPPLY REGISTERS SHALL BE INSTALLED WITH DAMPERS CAPABLE TO ADJUST THE AIRFLOW AND AIR BALANCE WHOLE SYSTEM TO MEET THE DESIGNED PARAMETERS.
13. THE FLUE DUCT FOR SEALED COMBUSTION WATER HEATER IS SIDE-WAL DISCHARGE. 3 FEET AWAY FROM OPENINGS INTO THE BUILDING AND 5' AWAY FROM THE PROPERTY LINE. SEE CIVIL DRAWINGS FOR PROPERTY LINE DETAILS.
14. IF HUMIDISTAT IS REQUIRED, LOCATE IT ADJACENT TO THERMOSTAT OR INTEGRATED IN EXHAUST FAN.
15. "REGISTERED' COPY OF THE CF-2R FORMS SHALL BE SUBMITTED PRIOR TO FINAL INSPECTION, SIGNED BY HERS RATER, FOR FIELD VERIFICATION AND DIAGNOSTIC TESTING.
16. WHEN LOCAL EXHAUST FANS ARE USED FOR "CONTINUOUS" WHOLE BUILDING VENTILATION, READILY ACCESSIBLE SWITCH SHALL BE PROVIDED AS AN OVERRIDE CONTROL (SECTION 4.4 ASHRAE 62.2). FAN SHALL OPERATE AT ALL TIMES WHEN UNIT IS OCCUPIED. LABEL SHALL BE PROVIDED INDICATING SYSTEM'S FUNCTION. FOLLOWING OR EQUIVALENT TEXT SHALL BE DISPLAYED:

    "THIS SWITCH CONTROLS THE INDOOR AIR QUALITY VENTILATION FOR THE HOME. LEAVE IT ON AT ALL TIMES WHEN HOME IS OCCUPIED UNLESS THE OUTDOOR AIR QUALITY IS VERY POOR. "
17. CONTRACTOR TO VERIFY INSTALLED DRYER LENGTHS AND NUMBER OF ELBOWS ON FIELD.
18. PER 2019 CEC FOR MULTIFAMILY LOW-RISE AND HIGH-RISE RESIDENTIAL BUILDINGS, CONTINUOUSLY OPERATED EXHAUST ONLY OR SUPPLY ONLY VENTILATION APPROACH SHALL BE ALLOWED TO BE USED TO PROVIDE THE REQUIRED UNIT VENTILATION AIRFLOW IF ENVELOPE LEAKAGE IS LESS THAN OR EQUAL TO 0.3 CFM AT 50 Pa PER SQUARE FOOT OF DWELLING UNIT ENVELOPE SURFACE. THIS REQUIREMENT SHALL BE FIELD TESTED AND VERIFIED (BLOWER DOOR TEST). THIS IS TO BE USED AS AN ALTERNATIVE TO BALANCED VENTILATION REQUIREMENT PER CEC. 120.1(b)2A iv AND 150.0(o)1C. WHEN THIS OPTION IS SELECTED BY DEVELOPER, GC WILL MAKE SURE THAT ALL NECESSARY BUILDING TECHNIQUES HAVE BEEN USED TO MEET THE LEAKAGE REQUIREMENTS.

HVAC KEY NOTES

1. CAP SHOULD BE LISTED FOR CLOTHES DRYER VENTING (DRYER JACK). DRYER MOISTURE DUCT SHALL BE EQUIPPED WITH BACK DRAFT DAMPER. DRYER MOISTURE DUCT SHALL BE MADE OUT OF METAL WITH SMOOTH INTERIOR FACE. LISTED CONNECTOR SHALL BE MAX. 6 FT. LONG.
2. PROVIDE RS/RL PIPING SIZE PER MANUFACTURER'S GUIDELINES. ROUTE FROM REMOTE CONDENSATE UNIT TO AIR HANDLER (FURNACE, FAN COIL ETC).
3. RUN 3/4" PRIMARY CONDENSATE LINE TO THE LAVATORY TAILPIECE. SECONDARY CONDENSATE TO DRAIN TO THE EXTERIOR ABOVE A WINDOW. OPTIONALLY USE OVERFLOW SWITCH. COORDINATE WITH THE PLUMBER. WHEN CONDENSATE LIFT IS REQUIRED USE CONDENSATE PUMPS.
4. EXHAUST VENT PIPE UP THRU ROOF, INSTALLED PER MANUFACTURER GUIDELINES. ROUTING AND TERMINATION OF VENT FOR HEATING UNIT SHALL COMPLY WITH CH. 8, CMC 2019.
5. PROVIDE WHOLE HOUSE EXHAUST FAN PER 2019 ENERGY CODE SECTION 150(O). SEE HVAC GENERAL NOTE #16 ABOVE FOR CONTROLS.
6. CONNECT KITCHEN HOOD (MIN. 100 CFM) TO 6"Ø KITCHEN HOOD EXHAUST AIR DUCT (MIN. 6"Ø)
7. EXHAUST OUTLET TERMINATES 3' AWAY FROM OPENINGS INTO THE BUILDING AND 3' AWAY FROM THE PROPERTY LINE. SEE CIVIL DRAWINGS FOR PROPERTY LINE DETAILS.
8. PROVIDE FLUE DUCT FOR WATER HEATER. INSTALLED PER MANUFACTURER'S INSTALLATION MANUAL.
9. PROVIDE OPENING NOT LESS THAN 100 SQ. IN. FREE NET AREA FOR DRYER MAKEUP AIR PER CMC 2019 (504.4.1)
10. PROVIDE DOOR UNDERCUT
11. 6"Ø EA DUCT UP THRU ROOF W/ CAP.
12. 4"Ø LINT DUCT UP THRU ROOF W/ CAP
13. ROUTE ALL 3RD FLOOR EXHAUST DUCT THROUGH ROOF.
14. PROVIDE GENERAL EXHAUST OPENINGS TERMINATING TO THE OUTDOORS WITH A PROTECTIVE CORROSION-RESISTANT SCREEN HAVING NOT LESS THAN ¼ OF AN INCH OPENINGS, AND NOT MORE THAN ½ OF AN INCH OPENINGS IN ACCORDANCE WITH CMC 502.1. EXCEPT CLOTH DRYER.
15. PROVIDE A 5"Ø LINT DUCT FOR THE DRYER VENT. A PLACARD IS TO BE ADDED TO SPECIFY 34 FEET IS THE LIMITING LENGTH FOR A 5"Ø DRYER VENT PER DETAIL #11 ON SHEET MD-2.

GOUVIS engineering consulting group, inc.®
15 Studebaker
Irvine
CA 92618

Irvine
tel 949.752.1612
fax 949.752.5321

Palm Springs
tel 760.323.5090

REGISTERED PROFESSIONAL ENGINEER
RADE BABIC
No. M38573
MECHANICAL
STATE OF CALIFORNIA

DATE SIGNED: 1/30/24

RESTRICTIVE NOTICE

THESE DESIGNS, DRAWINGS, AND SPECIFICATIONS ARE THE EXCLUSIVE PROPERTY OF GOUVIS ENGINEERING CONSULTING GROUP. THEY ARE THE SUBJECTOF COPYRIGHT AND OTHER LEGAL PROTECTION. THEY MAY BE USED ONLY BY THEIR INTENDED RECIPIENT AND ONLY FOR THE PROJECT DEPICTED HEREIN. NO PART OF THESE DRAWINGS ARE TO BE COPIED, TRANSFERRED, REPRODUCED, NOR CAN THEY BE USED, IN WHOLE OR IN PART, BY ANY OTHER PERSON OR FOR ANY OTHER PROJECT OR STRUCTURE, WITHOUT THE PRIOR EXPRESS WRITTEN CONSENT OF GOUVIS ENGINEERING CONSULTING GROUP

© 2017 GOUVIS ENGINEERING CONSULTING GROUP INC. - ALL RIGHTS RESERVED

PROJECT:
Tenant Square

DEVELOPER:
Osito Holdings LLC

ARCHITECT:
Gary Moore & Associates

1A DWG

LOCATION:
Morgan Hill
Santa Clara
CA

REVISIONS

NO.	DATE	DESCRIPTION
1	02/02/23	PLAN CHECK
2	11/01/23	PLAN CHECK
3	01/30/24	FIRE COMMENT

SHEET NAME:
UNIT B
FLOOR PLANS

PROJECT NUMBER:
66074

ENGINEER:

DRAFTER:

SHEET NUMBER:
M-3.2

ISSUED DATE: XX/XX/XX

BEND SHALL BE MADE WITH NOT LESS THAN 1 DUCT DIAMETER CENTERLINE RADIUS. DUCTS SHOULD EXTEND A FEW INCHES BEYOND THE END OF A SHEET METAL CONNECTION BEFORE BENDING. DUCTS SHOULD NOT BE COMPRESSED.

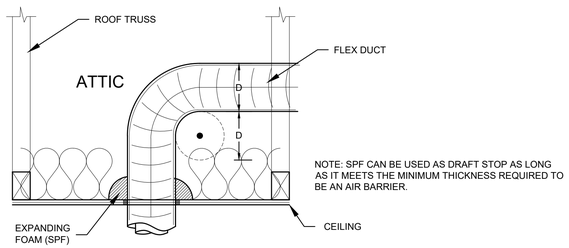

A.
SUPPORTED AT LEAST EVERY 4 FEET.

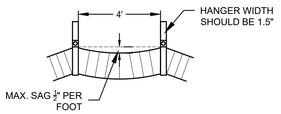

B.
VERTICALLY INSTALLED DUCT SHALL BE STABILIZED BY SUPPORT STRAPS AT A MAX. OF 6 FEET ON CENTER.

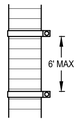

C.
SUPPORT DUCT BETWEEN METAL CONNECTION AND A BEND BY ALLOWING DUCT TO EXTEND STRAIGHT FOR A FEW INCHES BEFORE BENDING

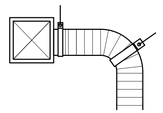

D.
FLEX DUCTS MAY REST ON CEILING JOISTS OR TRUSS SUPPORTS IN DRY CLIMATES IF SUPPORTED AT LEAST EVERY 4 FEET.

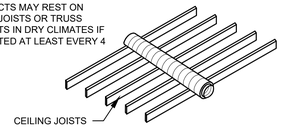

FLEX DUCT DETAIL | 6

WALL PENETRATION DETAIL

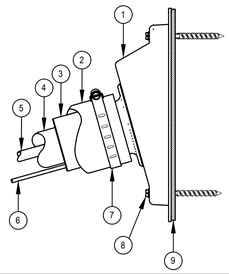

1. EXTERIOR WALL OR PARAPET WALL SEAL PENETRATION OUTLET WITH ELASTOMERIC LINE-SET COMPRESSION SLEEVE TYPE "TITANGS30" BY AIREX MANUFACTURING INC.
2. INSULATION PROTECTIVE PVC COVER TYPE "E-FLEX GUARD" BY AIREX MANUFACTURING INC OR SIMILAR
3. ELASTOMERIC LINE-SET COMPRESSION & ANTI-VIBRATION SLEEVE (COMPONENT OF REFERENCE 1 "TITAN GS30")
4. INSULATION FOR REFRIGERATION SUCTION LINE
5. REFRIGERATION SUCTION LINE
6. REFRIGERATION LIQUID LINE
7. MECHANICAL CONNECTION SECURED WITH STAINLESS STEEL CLAMP (COMPONENT OF REFERENCE 1 "TITAN GS30")
8. WALL FASTENERS SELF-TAPPING 3/8" HEX HEAD 1/4" DIAMETER ALL MATERIAL ANCHORS SCREWS WITH ELASTOMERIC WASHERS (COMPONENT OF REFERENCE 1 "TITAN GS30")
9. WALL SURFACE SEAL ELASTOMERIC GASKET (COMPONENT OF REFERENCE 1 "TITAN GS30")

FLAT ROOF PENETRATION DETAIL

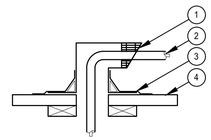

1. "PELICAN HOOD", "BIRDHOUSE" OR SIMILAR SHEET METAL RAIN HOOD PRODUCT
2. REFRIGERANT PIPES
3. SHEET METAL FLASHING WATER PROOFING PER ARCHITECTURAL DRAWINGS
4. ROOF

"PELICAN HOOD"

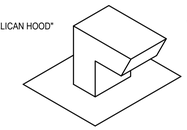

"BIRDHOUSE"

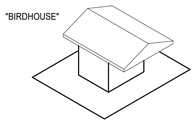

REFRIGERANT PIPE PENETRATION DETAIL | 4

EXHAUST FAN IN ATTIC

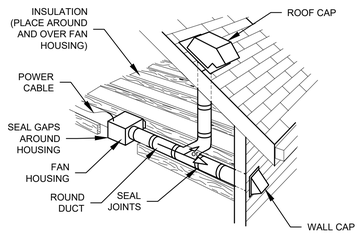

EXHAUST FAN MOUNTING IN FLOOR / ROOF FRAMING

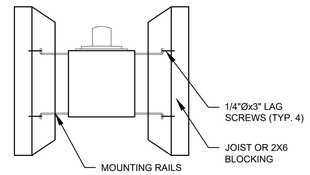

ENSURE DUCT JOINTS AND EXTERIOR PENETRATIONS ARE SEALED WITH CAULK OR OTHER SIMILAR MATERIAL TO CREATE AN AIR-TIGHT PATH. WHEN DUCTS IS LOCATED IN UNCONDITIONED SPACE PLACE /WRAP INSULATION AROUND THE DUCT AND FAN TO MINIMIZE POSSIBLE CONDENSATION BUILDUP WITHIN THE DUCT

EXHAUST FAN IN SOFFIT

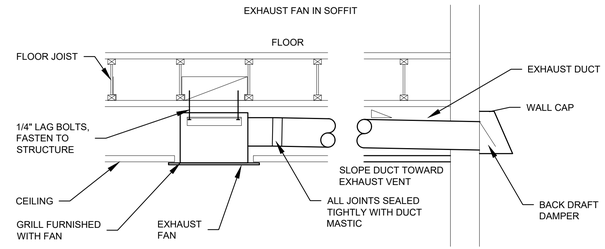

CEILING TYPE EXHAUST FAN DETAIL | 2

CONDENSING / HEAT PUMP UNIT ON THE GROUND

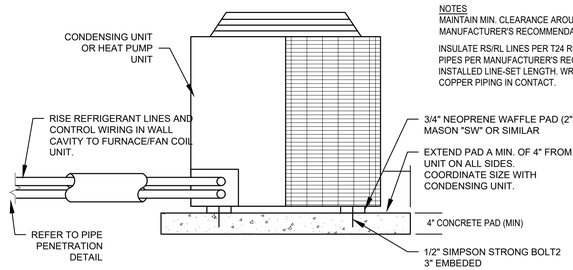

NOTES
MAINTAIN MIN. CLEARANCE AROUND THE UNIT PER MANUFACTURER'S RECOMMENDATIONS.

INSULATE RS/RL LINES PER T24 REQUIREMENTS . SIZE PIPES PER MANUFACTURER'S RECOMMENDATIONS FOR INSTALLED LINE-SET LENGTH. WRAP ALL EXPOSED COPPER PIPING IN CONTACT.

ROOF/DECK MOUNTED CONDENSING/ HEAT PUMP UNIT

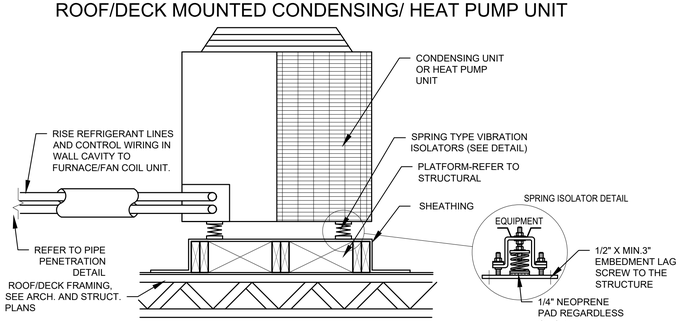

CONDENSING UNIT INSTALLATION | 5

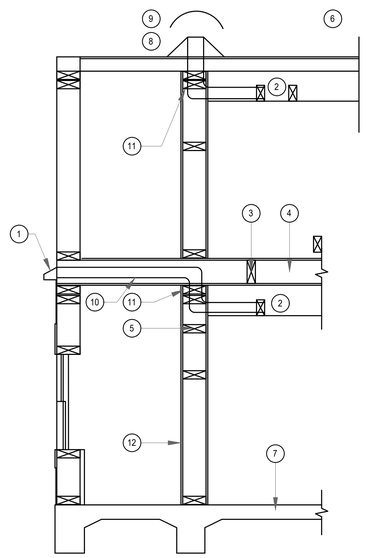

1. EYEBROW W/ BACKDRAFT DAMPER MAINTAIN MINIMUM THREE FEET AWAY FROM BUILDING OPENINGS (TYP.)
2. EXHAUST FAN IN CEILING OR WALL. SEE MECH DWSS.
3. 2X JOIST SEE STRUCT, DWSS. (TYP)
4. FLOOR CEILING ASSEMBLY
5. BLOCKING BY OTHERS (TYP)
6. ROOF - CEILING ASSEMBLY
7. FINISHED FLOOR
8. SHEET METAL FLASHING
9. TEE-TOP SHEET METAL ROOF JACK W/ WIRE MESH SCREEN
10. MIN 26 GAUGE SHEET METAL EXHAUST DUCT (TYP)
11. FIRE CAULK AT PLATE PENETRATION (TYP)
12. WALL (TYP)

NOTE:
1. SIMILAR FOR ADDITIONAL LEVELS.
2. SEE LINED JOIST BAY DETAIL WHEN DUCT DOES NOT ENTER FLOOR-CEILING. ASSEMBLY FROM WALL CAVITY.
3. SEE EXHAUST/ VENT TERMINATION DETAIL.

BATHROOM EXHAUST VENTING | 3

38MBRC: Installation Instructions

CLEARANCES

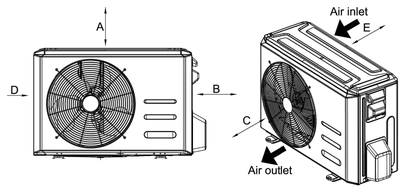

Fig. 6 — Outdoor Unit Clearances

Table 4 — Outdoor Unit Clearance Dimensions

UNIT	MINIMUM VALUE in. (mm)
A	24 (610)
B	24 (610)
C	24 (610)
D	4 (101)
E	4 (101)

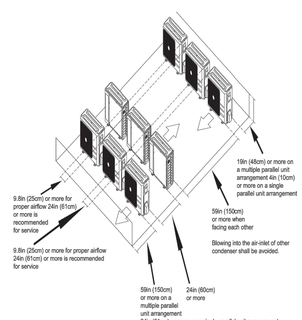

Fig. 7 —Clearances for multiple units

Manufacturer reserves the right to change, at any time, specifications and designs without notice and without obligations.

CONDENSING UNIT CLEARANCES (38MBRC) | 1

GOUVIS engineering consulting group, inc.

15 Studebaker
Irvine
CA 92618

Irvine
tel 949.752.1612
fax 949.752.5321

Palm Springs
tel 760.323.5090

REGISTERED PROFESSIONAL ENGINEER
RADE BABIC
No. M38573
MECHANICAL
STATE OF CALIFORNIA

DATE SIGNED: 1/30/24

RESTRICTIVE NOTICE

THESE DESIGNS, DRAWINGS, AND SPECIFICATIONS ARE THE EXCLUSIVE PROPERTY OF GOUVIS ENGINEERING CONSULTING GROUP. THEY ARE THE SUBJECTOF COPYRIGHT AND OTHER LEGAL PROTECTION. THEY MAY BE USED ONLY BY THEIR INTENDED RECIPIENT AND ONLY FOR THE PROJECT DEPICTED HEREIN. NO PART OF THESE DRAWINGS ARE TO BE COPIED, TRANSFERRED, REPRODUCED, NOR CAN THEY BE USED, IN WHOLE OR IN PART, BY ANY OTHER PERSON OR FOR ANY OTHER PROJECT OR STRUCTURE, WITHOUT THE PRIOR EXPRESS WRITTEN CONSENT OF GOUVIS ENGINEERING CONSULTING GROUP

© 2017 GOUVIS ENGINEERING CONSULTING GROUP INC. - ALL RIGHTS RESERVED

PROJECT:
Tenant Square

DEVELOPER:
Osito Holdings LLC

ARCHITECT:
Gary Moore & Associates

LOCATION:
Morgan Hill
Santa Clara
CA

REVISIONS

NO.	DATE	DESCRIPTION
1	02/02/23	PLAN CHECK
2	11/01/23	PLAN CHECK
3	01/30/24	FIRE COMMENT

SHEET NAME:
DETAILS

PROJECT NUMBER:
66074

ENGINEER:

DRAFTER:

SHEET NUMBER:
MD-1

ISSUED DATE:XX/XX/XX

ATTIC FAN COIL INSTALLATION 10

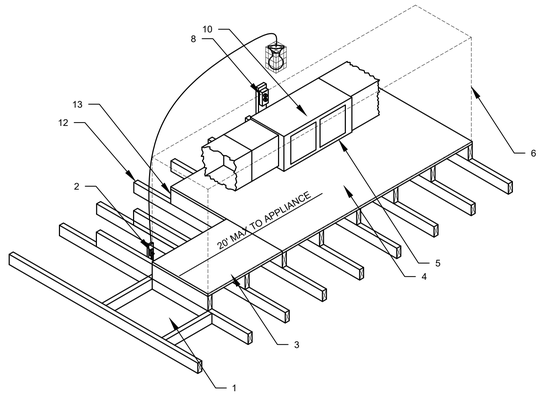

1. 22" x 30" MINIMUM ATTIC OPENING
2. LIGHT SWITCH LOCATED AT THE ENTRANCE
3. SOLID FLOORING MINIMUM 24" WIDE
4. MINIMUM 30"x30" FLOOR AREA AT REQUIRED ACCESS SIDE
   EXCEPTION: A WORKING PLATFORM NEED NOT BE PROVIDED WHERE THE FAN COIL IS CAPABLE OF BEING SERVICED FROM THE REQUIRED ACCESS OPENING AND INSTALLED PER MANUFACTURER INSTALLATION MANUAL COMPLYING WITH ALL REQUIRED SERVICE CLEARANCES
5. SERVICE SIDE
6. WHERE HEIGHT OF PASSAGEWAY IS LESS THAN 6 FEET MAX. DISTANCE FROM ACCESS SHALL NOT EXCEED 20 FT.
7. NOT USED
8. 120 V RECEPTACLE OUTLET (WITHIN 25 FT)
9. LIGHTING FIXTURE W/ LAMP PROTECTION CAGE BY ELECTRICAL
10. FAN COIL
11. NOT USED
12. ATTIC TRUSS (TYP.) REFER TO TRUSS SHOP DRAWINGS
13. 2"X6" SLEEPERS (TYP.) REFER TO TRUSS SHOP DRAWINGS

CONDENSATE DRAIN DETAIL 8

BLOW THROUGH UNIT
(COIL AT POSITIVE PRESSURE)

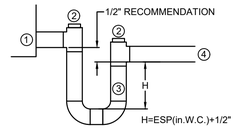

DRAW THROUGH UNIT
(COIL AT NEGATIVE PRESSURE)

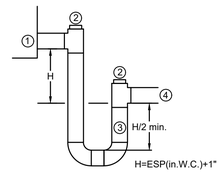

1. CONDENSATE DRAIN CONNECTION
2. HAND TIGHT PLUG
3. P-TRAP WITH WATER SEAL
4. CONDENSATE LINE. MIN 1% (1/8" PER 1') SLOPE
   PVC OR COPPER PIPE

ESP = EXTERNAL STATIC PRESSURE (SEE MECHANICAL SCHEDULE).

PIPE MATERIAL - PVC/COPPER OR ANY OTHER MATERIAL APPROVED FOR DRAIN PIPES PER CPC

MANUFACTURER'S APPROVED CONDENSATE DRAIN KITS ARE ACCEPTABLE ALTERNATIVE TO THIS P TRAP.

DRYER VENT MAXIMUM LENGTH CALCULATIONS (5 INCH) 11

PER CALIFORNIA MECHANICAL CODE, SECTION THE MAXIMUM DRYER VENT DUCT LENGTH FOR A 4"Ø DUCT IS 14 FEET WITH TWO 90° ELBOWS. TWO (2) FEET SHALL BE DEDUCTED FOR EACH 90° ELBOW.

CFM = VELOCITY x CROSS SECTIONAL AREA

$$CFM_{4"} = \pi \times \frac{r_{4"}^2 \times V_{4"}}{4} \qquad CFM_{5"} = \pi \times \frac{r_{5"}^2 \times V_{5"}}{4}$$

CFM IS CONSTANT FOR THE DRYER AT A GIVEN STATIC PRESSURE, THEREFORE

$$CFM_{4"} = CFM_{5"}$$

$$\frac{\pi \times r_{4"}^2 \times V_{4"}}{4} = \frac{\pi \times r_{5"}^2 \times V_{5"}}{4} \quad \Rightarrow \quad V_{4"} = \frac{25}{16} \times V_{5"} \quad \Rightarrow \quad V_{4"} = 1.5625 \times V_{5"}$$

FRICTION = $\frac{\text{COEFFICIENT OF FRICTION x VELOCITY SQUARED x DUCT LENGTH}}{\text{TWO TIMES GRAVITY}}$

$$FRICTION_{4"} = F \times V_{4"}^2 \times \frac{L_{4"}}{2g} \qquad FRICTION_{5"} = F \times V_{5"}^2 \times \frac{L_{5"}}{2g}$$

$$FRICTION_{4"} = FRICTION_{5"} \leq \text{DRYER EXHAUST ESP}$$

$$\frac{F \times V_{4"}^2 \times L_{4"}}{2g} = \frac{F \times V_{5"}^2 \times L_{5"}}{2g} \quad \Rightarrow \quad L_{4"} = \frac{V_{5"}^2 \times L_{5"}}{V_{4"}^2} \quad \Rightarrow \quad L_{4"} = \frac{V_{5"}^2 \times L_{5"}}{(1.5625 \times V_{5"})^2}$$

$$\Rightarrow \quad L_{5"} = 2.44\ L_{4"}.$$

$$L_{5"} = 2.44\ L_{4"} = (2.44 \times 14') = 34.18' \approx 34 \text{ FEET}$$

MAXIMUM LENGTH OF A 5"Ø DRYER VENT DUCT IS 34 FEET TO MAINTAIN THE SAME CFM AND PRESSURE LOSS AS A 4"Ø DRYER VENT WITH A LENGTH OF 14 FEET.

DRYER VENT DETAIL 9

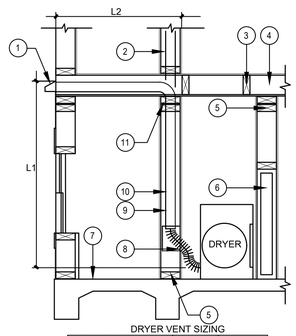

DRYER VENT SIZING

DRYER VENT SIZE	LT	NOTES
4"	14'-0"	(1)
5"	34'-0"	SEE MD-2

1. EYEBROW W/ BACKDRAFT DAMPER MAINTAIN MINIMUM THREE FEET AWAY FROM BUILDING OPENINGS (TYP.)
2. DRYER VENT TO ROOF WHERE SHOWN OR NOTED ON MECH. DWGS.
3. FLOOR JOISTS SEE STRUCT. DWGS. (TYP.)
4. FLOOR. CEILING ASSEMBLY
5. WALL TOP PLATES AND BOTTOM PLATES
6. LOUVERED DOOR BY OTHERS SEE ARCH. DWGS. OR TRANSFER LOUVER MIN. 100 SQ. IN. PER DRYER (NET FREE AREA)
7. FINISHED FLOOR.
8. APPROVED FLEXIBLE DUCT CONNECTORS NOT MORE THAN 6FT. IN LENGTH TO DRYER MAY BE USED (FLEXIBLE DUCT CONNECTOR SHALL NOT BE CONCEALED WITHIN BLDG. CONSTRUCTION). ILLUSTRATION DEPICTS USE OF DRYER BOX WITH THE FLEX DUCT CONNECTION.
   FLEX DUCT CONNECTOR SHALL NOT BE DEFORMED OR COMPRESSED.
9. DRYER DUCT SHALL NOT BE CONNECTED W/ SHEET METAL SCREWS OR OTHER FASTENERS WHICH WILL OBSTRUCT THE AIR FOW (TYP.)
10. DRYER DUCT SHALL BE OF MIN. 26 GAUGE SHEET METAL AND SHALL HAVE SMOOTH INTERIOR SURFACES (TYP.)
11. FIRECAULK TOP PLATE PENETRATION WHEN PENETRATE RATED FLOOR CEILING ASSEMBLY (TYP.)

NOTES:
1. FOR A 4" GALVANIZED DRYER VENT DUCT IF:L1 = 8' THEN: L2 = 14'-8" = 6'

UNLESS OTHERWISE PERMITTED OR REQUIRED BY MANUFACTURER'S INSTRUCTIONS AND APPROVED BY AUTHORITY HAVING JURISDICTION, CLOTHES DRYER VENT SHALL NOT EXCEED A TOTAL COMBINED HORIZ. AND VERT. LENGTH OF 14' . TWO FEET SHALL BE DEDUCTED FOR EACH 90- DEGREE ELBOW IN EXCESS OF TWO. SECTION 504.4.2.1 OF THE CMC.

WHEN DUCT LENGTHS EXCEED CODE MINIMUM DRYER WITH LONG VENT OPTION SHALL BE SELECTED.

WHEN DUCT LENGTH EXCEED MANUFACTURER'S RECOMMENDED MAX. LENGTH UL LISTED POWER VENTILATORS SHALL BE USED IN ACCORDANCE WITH UL705 AND IN ACCORDANCE WITH THE MANUFACTURER'S INSTALLATION MANUAL.

SOFFIT FAN COIL INSTALLATION 7

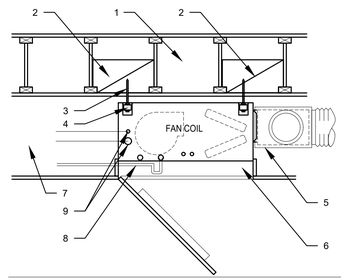

1. FLOOR OR ROOF FRAMING PER PLANS (SEE DIFFERENT CONDITIONS BELOW)
2. 2"x6" BLOCKING WITH 2-16d's TOE NAILS AT ENDS. NOTCHED AT TRUSS / TJI BOTTOM CORD
3. 1/4"Ø LAG SCREW WITH MIN. 2-1/2" PENETRATION
4. NEOPRENE HANGER MOUNT TYPE MASON HMIB OR SIMILAR
5. INSULATED SUPPLY PLENUM
6. SEALED RETURN AIR PLENUM (WHEN BOTTOM RETURN OPTION IS USED.
7. NON RATED SOFFIT
8. 3/4" CONDENSATE LINE WITH TRAP
9. REFRIGERANT PIPES (LIQUID AND SUCTION)
10. FACTORY SUPPLIED LOUVERED ACCESS PANEL (REFER TO PLAN) OR (2) STD STAMPFACE FILTER RETURN AIR GRILLS.

NOTE:
UNLESS DWELLING UNIT, MATERIALS EXPOSED WITHIN DUCTS OR PLENUMS SHALL BE NONCOMBUSTIBLE OR SHALL HAVE A FLAME SPREAD INDEX NOT TO EXCEED 25 AND A SMOKE-DEVELOPED INDEX NOT TO EXCEED 50, WHERE TESTED AS A COMPOSITE PRODUCT IN ACCORDANCE WITH ASTM E84 OR UL 723.

STRUCTURAL ATTACHMENTS

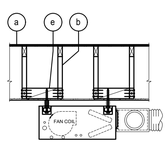

ROOF TRUSS SYSTEM: FAN COIL IN SOFFIT

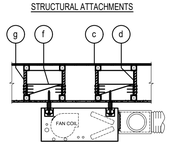

TJI-FLOOR SYSTEM: FAN COIL IN SOFFIT

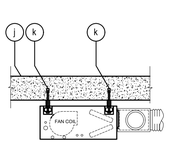

CONCRETE / LWT CONCRETE DECK
(FOR PT SLAB

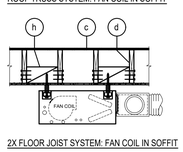

2X FLOOR JOIST SYSTEM: FAN COIL IN SOFFIT

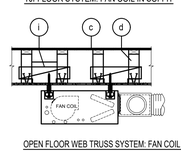

OPEN FLOOR WEB TRUSS SYSTEM: FAN COIL IN SOFFIT

a. ROOF SHEATHING.
b. ROOF SYSTEM PER PLAN.
c. FLOOR SHEATHING.
d. FLOOR SYSTEM PER PLAN.
e. 2X4 BLK'G W/ (3) 16d's FACE NAILS AT ENDS.
f. 2X6 BLK'G W/ (3) 16d's FACE NAILS AT ENDS. NOTCHED AT TJ BOTTOM CHORD.
g. ADD 1X WEB STIFFENER.
h. 2X6 BLK'G W/ (3) 16d's FACE NAILS AT ENDS.
i. 2X6 BLK'G W/ (2) 16d's TOE NAILS AT ENDS. NOTCHED AT FLOOR TRUSS BOTTOM CHORD.
j. CONCRETE SLAB / LIGHT WEIGHT CONCRETE DECK
k. HILTI KWIK BOLT 3 (KB3) 3/8" - 3" EMBEDED

ISSUED DATE:XX/XX/XX

GOUVIS engineering consulting group, inc.®
15 Studebaker
Irvine
CA 92618

Irvine
tel 949.752.1612
fax 949.752.5321

Palm Springs
tel 760.323.5090

REGISTERED PROFESSIONAL ENGINEER
RADE BABIC
No. M38573
MECHANICAL
STATE OF CALIFORNIA

DATE SIGNED: 1/30/24

RESTRICTIVE NOTICE

THESE DESIGNS, DRAWINGS, AND SPECIFICATIONS ARE THE EXCLUSIVE PROPERTY OF GOUVIS ENGINEERING CONSULTING GROUP. THEY ARE THE SUBJECTOF COPYRIGHT AND OTHER LEGAL PROTECTION. THEY MAY BE USED ONLY BY THEIR INTENDED RECIPIENT AND ONLY FOR THE PROJECT DEPICTED HEREIN. NO PART OF THESE DRAWINGS ARE TO BE COPIED, TRANSFERRED, REPRODUCED, NOR CAN THEY BE USED, IN WHOLE OR IN PART, BY ANY OTHER PERSON OR FOR ANY OTHER PROJECT OR STRUCTURE, WITHOUT THE PRIOR EXPRESS WRITTEN CONSENT OF GOUVIS ENGINEERING CONSULTING GROUP

© 2017 GOUVIS ENGINEERING CONSULTING GROUP INC. - ALL RIGHTS RESERVED

PROJECT:
Tenant Square

DEVELOPER:
Osito Holdings LLC

ARCHITECT:
Gary Moore & Associates

LOCATION:
Morgan Hill
Santa Clara
CA

REVISIONS

NO.	DATE	DESCRIPTION
1	02/02/23	PLAN CHECK
2	11/01/23	PLAN CHECK
3	01/30/24	FIRE COMMENT

SHEET NAME:
DETAILS

PROJECT NUMBER:
66074

ENGINEER:

DRAFTER:

SHEET NUMBER:
MD-2

PLUMBING GENERAL NOTES

A. GENERAL

1. ALL WORK SHALL COMPLY WITH CALIFORNIA PLUMBING CODE, CALIFORNIA ENERGY CODE, CALIFORNIA GREEN BUILDING CODE AND APPLICABLE LOCAL, STATE CODES AND REGULATIONS WITH AMENDMENTS (LATEST EDITION).

2. WHEN SUPPLIED, DESIGN ENGINEER SHALL REVIEW AND APPROVE SUBMITTALS FOR ALL EQUIPMENT. IN THE CASE WHERE A SUGGESTED SUBSTITUTE IS NOT ADEQUATE, SUBMITTAL SHALL BE RETURNED TO CONTRACTOR AND STAMPED AS "REVIEW AND RESUBMIT". SUBMITTAL APPROVAL CONFIRMS ONLY THAT THE SUGGESTED SUBSTITUTE HAS EQUIVALENT TECHNICAL PARAMETERS AND DESIGN CONSULTANT IS NOT RESPONSIBLE FOR ANY FINANCIAL IMPACT THAT THE SUBSTITUTE CAUSES.

3. PLUMBING DRAWINGS SHOW ONLY PERTINENT INFORMATION FOR LOCATION, SIZE AND CLASS OF PIPING, EQUIPMENT AND FIXTURES TO BE INSTALLED. SPECIFICATIONS WHICH FORM A PART OF THE DRAWINGS, SPECIFY MATERIAL TO BE USED FOR VARIOUS SIZES AND CLASSES OF PIPING, EQUIPMENT AND FIXTURES.

4. ELEVATIONS SHOWN ON PLUMBING DRAWINGS ARE REFERENCED FROM NOMINAL FINISHED FLOOR ELEVATION.

B. CONTRACTOR NOTES

1. BEFORE SUBMITTING THE BID, CONTRACTOR SHALL SURVEY THE ENTIRE PROJECT SITE AND BECOME THOROUGHLY FAMILIAR WITH ACTUAL EXISTING CONDITIONS. THE INTENT OF WORK IS SHOWN ON THE DRAWINGS AND DESCRIBED HEREIN. BY THE ACT OF SUBMITTING A BID PROPOSAL FOR WORK, THE CONTRACTOR SHALL BE DEEMED TO HAVE MADE SUCH A STUDY AND EXAMINATION AND TO ACCEPT ALL CONDITIONS PRESENT AT SITE. NO REQUEST FOR ADDITIONAL PAYMENT SHALL BE CONSIDERED VALID, DUE TO CONTRACTOR FAILURE TO ALLOW COST ESTIMATES FOR CONDITIONS WHICH MAY EXIST.

2. CONTRACTOR BID SHALL NOT BE LIMITED TO THE WORK SHOWN ON THE PLANS AND SPECIFICATIONS. ALL PREMIUM OVERTIME COSTS, UTILITY CHARGES, COST FOR TEMPORARY UTILITIES, ALL ALTERATIONS, ALL DEMOLITION AND EXTENSION WORKS, PERMITS, INSPECTION FEES, MISCELLANEOUS CONTINGENCY COSTS, ETC., SHALL BE INCLUDED IN BID.

3. THIS LEGEND DRAWING IS GENERAL COMPILATION OF NOTES AND SYMBOLS THAT ARE REGULARLY REQUIRED ON PLUMBING DRAWINGS. SOME INFORMATION SHOWN ON THIS DRAWING MAY NOT NECESSARILY BE APPLICABLE TO THIS SPECIFIC PROJECT. CONTRACTOR SHALL BE RESPONSIBLE FOR COORDINATING INFORMATION ON PLANS WITH PERTINENT DATA ON THIS DRAWING.

4. CONTRACTOR SHALL COORDINATE HIS WORK HARMONIOUSLY WITH ALL OTHER TRADES.

5. IF THE CONTRACTOR REQUIRES A SOFFIT OR PLUMBING WALL THAT IS NOT SPECIFIED ON THE ARCHITECTURAL PLANS, THE CONTRACTOR SHALL IMMEDIATELY NOTIFY THE ARCHITECT AND DESIGN ENGINEER PRIOR TO THE INSTALLATION OF THE RELATED PIPING.

6. VALVE HANDLE ORIENTATION SHALL BE BY CONTRACTOR UNLESS SPECIFICALLY SHOWN ON DRAWINGS OR DIRECTED BY CONSTRUCTION MANAGER. VALVE HANDLE SHALL CLEAR VEHICLE AND/OR PERSONNEL TRAFFIC AND SHALL BE EASILY ACCESSIBLE.

7. CONTRACTOR SHALL SEAL PENETRATIONS THROUGH FIRE WALLS AND FLOORS WITH APPROVED FIRE SEALANT. REFER TO SPECIFICATION. INSTALL PER MANUFACTURERS INSTRUCTIONS FOR APPLICABLE PIPE MATERIAL AND SIZE.

8. ANY DIMENSIONS SHOWN ON THESE DRAWINGS ARE APPROXIMATE, AND MUST BE CONFIRMED AT THE SITE BY THE CONTRACTOR PRIOR TO CONSTRUCTION. ARCHITECT AND ENGINEER SHALL BE NOTIFIED IN WRITING IMMEDIATELY FOR CLARIFICATION.

9. ALL FIXTURE LOCATIONS, INCLUDING BUT NOT LIMITED TO FLOOR DRAINS, AREA DRAINS, ROOF DRAINS, PLANTER DRAINS, SCUPPERS, DOWNSPOUTS, WATER-CLOSETS, LAVATORIES, SINKS, WASHER BOXES, BATHTUBS AND SHOWERS, SHALL BE LOCATED BY THE ARCHITECTURAL PLANS OR LANDSCAPE PLANS. ROUTING FROM FIXTURES TO THE APPROPRIATE DRAIN SYSTEM IS SHOWN ON THESE PLANS. CONTRACTOR SHALL CONTACT EOR IMMEDIATELY IF LOCATIONS DO NOT MATCH BETWEEN ARCHITECTURAL AND PLUMBING PLANS.

10. PLASTIC AND COPPER OR COPPER ALLOY PIPING PENETRATING FRAMING MEMBERS TO WITHIN 1 INCH OF THE EXPOSED FRAMING SHALL BE PROTECTED BY STEEL NAIL PLATES NOT LESS THAN NO. 18 GAUGE IN THICKNESS. THE STEEL NAIL PLATE SHALL EXTEND ALONG THE FRAMING MEMBER NOT LESS THAN 1-1/2 INCHES BEYONE THE OUTSIDE DIAMETER OF THE PIPE OR TUBING. CPC 312.9.

C. POTABLE WATER

1. POTABLE WATER SYSTEM SHALL BE DISINFECTED PRIOR TO USE IF REQUIRED BY THE LOCAL AUTHORITY HAVING JURISDICTION AND OUTLINED IN THE PLUMBING CODE.

2. ALL INSTALLATIONS OF PEX PIPE AND CPVC PIPE SHALL BE FLUSHED TWICE OVER A PERIOD OF AT LEAST ONE WEEK. CONTRACTOR SHALL FOLLOW THE FLUSHING REQUIREMENTS AS OUTLINED IN CPC SECTIONS 604.1.1(h)(i) AND 604.1.2.

3. ALL PLUMBING FIXTURES SHALL BE CONNECTED TO AN APPROVED WATER SUPPLY. LAVATORIES, BATHTUBS, SHOWERS, AND OTHER SHALL BE PROVIDED WITH HOT AND COLD WATER. CRBC R306.4

4. DOMESTIC HOT WATER DELIVERED TO PUBLIC-USE LAVATORIES SHALL BE LIMITED TO A MAXIMUM TEMPERATURE OF 120°F BY A DEVICE THAT COMPLIES WITH ASSE 1070, AMSE A112.1070 AND/OR CSA B125.70. THE WATER HEATER SHALL NOT BE CONSIDERED A CONTROL FOR MEETING THIS PROVISION. CPC SECTION 407.3.

5. PROVIDE WATER HAMMER ARRESTORS FOR ALL QUICK-ACTING VALVES.

6. PIPES, PIPE FITTING, VALVES, AND FAUCETS UTILIZED IN THE WATER SUPPLY SYSTEM FOR NON-DRINKING WATER APPLICATIONS SHALL HAVE A MAXIMUM OF 8 PERCENT LEAD CONTENT. CPC SECTION §604.2.1

7. POTABLE WATER SUPPLY TO BEVERAGE DISPENSERS CARBONATED BEVERAGE DISPENSERS, OR COFFEE MACHINES SHALL BE PROTECTED BY AN AIR GAP OR A VENTED BACK-FLOW PREVENTER THAT COMPLIES WITH ASSE 1022.

8. POTABLE WATER MAKE UP SUPPLY FOR SWIMMING POOLS, SPAS AND HOT TUBS SHALL BE PROTECTED FROM BACK-FLOW USING AN APPROPRIATED REDUCED PRESSURE PRINCIPLE BACK-FLOW PREVENTER.

9. WHERE MORE THAN ONE BUILDING IS BEING SUPPLIED ON A SINGLE PREMISE, EACH BUILDING SHALL BE PROVIDED A FULL WAY SHUT OFF VALVE IN AN ACCESSIBLE LOCATION. THIS REQUIREMENT DOES NOT APPLY FOR SINGLE FAMILY RESIDENCES WITH ACCESSORY STRUCTURES.

10. IN MULTI-DWELLING UNITS, ONE OR MORE SHUT OFF VALVES SHALL BE PROVIDED IN EACH DWELLING UNIT SO THAT THE WATER MAY BE SHUT OFF WITHOUT AFFECTING THE WATER SUPPLY TO OTHER DWELLING UNITS.

11. WHERE A BOOSTER PUMP IS CONNECTED TO A BUILDING SUPPLY OR UNDERGROUND WATER PIPE, A LOW-PRESSURE CUTOFF SWITCH ON THE INLET SIDE OF THE PUMP SHALL BE INSTALLED NOT MORE THAN 5 FEET OF THE INLET. THE CUTOFF SWITCH SHALL BE SET FOR NOT LESS THAN 10 PSI. A PRESSURE GAUGE SHALL BE INSTALLED BETWEEN THE SHUTOFF VALVE AND THE PUMP.

12. A CONTROL VALVE SHALL BE INSTALLED IMMEDIATELY AHEAD OF EACH WATER-SUPPLIED APPLIANCE AND IMMEDIATELY AHEAD OF EACH SLIP JOINT OF APPLIANCE SUPPLY. CPC 606.5

13. WHERE DOMESTIC WATER PIPING IS REQUIRED TO BE ROUTED UNDER A CONCRETE FLOOR SLAB WITHIN A BUILDING, PRIOR APPROVAL FROM THE AUTHORITY HAVING JURISDICTION MAY BE REQUIRED. IF APPROVED, SUCH PIPING SHALL BE INSTALLED IN ACCORDANCE WITH CPC 609.3(1) AND 609.3(2).

14. WATER PIPING SHALL NOT BE INSTALLED DIRECTLY IN OR UNDER A CONCRETE FLOOR SLAB WITHIN A BUILDING WITHOUT PRIOR APPROVAL OF THE BUILDING OFFICIAL. ON PLANS PER THE REQUIREMENTS OF CITY MUNI COD "15.20.060 - SECTIONS 609.3 AMENDED - UNDER CONCRETE SLAB". 1

D. SANITARY AND STORM DRAINAGE

15. SANITARY DRAINAGE PIPING SHALL SLOPE 1/4" PER FOOT UNLESS OTHERWISE APPROVED BY THE BUILDING OFFICIAL. DRAINAGE PIPING 4" & LARGER SHALL SLOPE 1/8" PER FOOT WHERE IT IS IMPRACTICAL DUE TO STREET SEWER ELEVATION OR STRUCTURAL FEATURES TO OBTAIN 1/4" PER FOOT.

16. FLOOR DRAINS OR SIMILAR TRAPS DIRECTLY CONNECTED TO THE DRAINAGE SYSTEM AND SUBJECT TO INFREQUENT USE SHALL BE PROVIDED WITH AN APPROVED AUTOMATIC MEANS OF MAINTAINING THEIR WATER SEALS.

17. FLOOR DRAIN & HUB DRAIN P-TRAPS SHALL BE DEEP SEAL TYPE UNLESS NOTED OTHERWISE. FLOOR DRAIN AND HUB DRAIN P-TRAPS WITH TRAP PRIMER SHALL BE STANDARD SEAL TYPE UNLESS NOTED OTHERWISE.

18. TOP OF FLOOR CLEANOUTS SHALL BE FLUSH WITH FINISHED FLOOR UNLESS NOTED OTHERWISE.

19. VENT PIPE EXTENSIONS THRU ROOF SHALL TERMINATE 1'-0" (MINIMUM) ABOVE FINISHED ROOF.

20. ALL SANITARY SYSTEM MATERIALS SHALL BE LISTED BY AN APPROVED LISTING AGENCY.

21. ALL PLUMBING FIXTURES SHALL BE CONNECTED TO A SANITARY SEWER SYSTEM. CRBC R3.063

22. COPPER ALLOY OR CAST-IRON DRAINAGE BODY CLEANOUTS SHALL NOT BE USED AS A REDUCER OR ADAPTER FROM CAST-IRON DRAINAGE PIPE TO IRON PIPE SIZE (IPS) PIPE. CPC SECTION §316.1

23. EACH CLEAN-OUT IN PIPING 2 INCHES OR LESS IN SIZE SHALL BE INSTALLED SO THAT THERE IS A CLEARANCE OF NOT LESS THAN 18 INCHES IN FRONT OF THE CLEAN-OUT. CLEANOUTS IN PIPING EXCEEDING 2 INCHES SHALL HAVE A CLEARANCE OF NOT LESS THAN 24 INCHES IN FRONT OF THE CLEAN-OUT. CPC SECTION §707.9

24. ANY CLEANOUTS SHOWN ON PLANS THAT DO NOT SPECIFY A SIZE SHALL BE SIZED PER CPC TABLE 707.1. ANY ADDITIONAL CLEAN-OUTS INSTALLED BY CONTRACTOR SHALL BE SIZED PER CPC TABLE 707.1.

25. BUILDING DRAIN AND VENT PIPING MATERIALS SHALL COMPLY WITH SECTIONS 701.0 AND 903.0 OF THE CPC.

26. EACH VENT SHALL RISE VERTICALLY TO A POINT NOT LESS THAN SIX(6) INCHES ABOVE THE FLOOD-LEVEL RIM OF THE FIXTURE SERVED BEFORE OFFSETTING HORIZONTALLY OR BEFORE BEING CONNECTED TO ANY OTHER VENT.

27. DRAINAGE CONNECTIONS SHALL NOT BE MADE INTO A DRAINAGE PIPING SYSTEM WITHIN EIGHT (8) FEET OF A VERTICAL TO HORIZONTAL CHANGE OF DIRECTION OF A STACK CONTAINING SUDS PRODUCING FIXTURES. BATHTUBS, LAUNDRIES, WASHING MACHINE STANDPIPES, KITCHEN SINKS, AND DISHWASHERS SHALL BE CONSIDERED SUDS-PRODUCING FIXTURES. WHERE PARALLEL VENT STACKS ARE REQUIRED, THEY SHALL CONNECT TO THE DRAINAGE STACK AT A POINT EIGHT (8) FEET ABOVE THE LOWEST POINT OF THE DRAINAGE STACK. CPC SECTION 711.0

27.1. EXCEPTIONS: (1) SINGLE FAMILY RESIDENCES. (2) STACKS RECEIVING THE DISCHARGE FROM LESS THAN THREE STORIES OF PLUMBING FIXTURES.

F. PLUMBING FIXTURES, EQUIPMENT AND APPLIANCES

5. EXACT LOCATION OF PLUMBING EQUIPMENT, DEVICES AND FIXTURES SHALL BE CONFIRMED BY CONTRACTOR PRIOR TO INSTALLATION. CONTRACTOR SHALL REFER TO ARCHITECTURAL DRAWINGS FOR FIXTURE LOCATIONS AND MOUNTING HEIGHTS.

6. WATER HEATER SHALL BE ANCHORED OR STRAPPED TO RESIST HORIZONTAL DISPLACEMENT DUE TO EARTHQUAKE MOTION PER SECTION 507.2 CPC.

7. ROUTING AND TERMINATION OF FLUE AND COMBUSTION AIR INTAKE FOR WATER HEATER SHALL COMPLY WITH CH.5 CPC 2019 AND MANUFACTURERS SPECIFICATIONS.

8. INSTANTANEOUS WATER HEATERS WITH AN INPUT RATING GREATER THAN 6.8 kBTU/HR (2kW) SHALL HAVE ISOLATION VALVES ON BOTH THE COLD WATER SUPPLY AND THE HOT WATER PIPE LEAVING THE WATER HEATER, AND HOSE BIBBS OR OTHER FITTINGS ON EACH VALVE FOR FLUSHING THE WATER HEATER WHEN THE VALVES ARE CLOSED. CBEES 110.3(C)6.

9. BATHTUB, SHOWER, AND TUB-SHOWER COMBINATIONS REQUIRE INDIVIDUAL CONTROL VALVES OF THE PRESSURE BALANCE OR THERMOSTATIC MIXING VALVE TYPE. HANDLE POSITION STOPS SHOULD BE PROVIDED ON THE VALVES AND SHOULD BE ADJUSTED PER MANUFACTURER'S INSTRUCTIONS TO DELIVER A MAXIMUM 120°F.

10. FLEXIBLE PVC HOSES AND TUBING INTENDED TO BE USED ON WHIRLPOOL BATH-TUB WATER CIRCULATION SYSTEMS OR PNEUMATIC SYSTEMS SHALL BE IN ACCORDANCE WITH IAPMO Z1033. CPC SECTION §409.6.1

11. CONTROL VALVES AND SHOWERHEADS SHALL BE LOCATED ON THE SIDEWALL OF SHOWER COMPARTMENTS OR OTHERWISE ARRANGED SO THAT THE SHOWERHEAD DOES NOT DISCHARGE DIRECTION AT THE ENTRANCE TO THE COMPARTMENT SO THAT THE BATHER CAN ADJUST THE VALVES BEFORE STEPPING INTO THE SHOWER SPRAY.

12. WHERE A WATER HEATER IS LOCATED IN AN ATTIC, IN OR ON AN ATTIC CEILING ASSEMBLY, FLOOR-CEILING ASSEMBLY, OR FLOOR-SUBFLOOR ASSEMBLY WHERE DAMAGE RESULTS FROM A LEAKING WATER HEATER, A WATERTIGHT PAN OF CORROSION-RESISTANT MATERIAL SHALL BE INSTALLED BENEATH THE WATER HEATER WITH NOT LESS THAN 3/4" DIAMETER DRAIN TO AN APPROVED LOCATION. SUCH PAN SHALL BE NOT LESS THAN 1-1/2" IN DEPTH.

G. PIPING

1. ELEVATIONS BELOW GROUND LEVEL ARE NOTED IN FEET AND DECIMALS OF FEET AND SHALL DENOTE INVERT ELEVATION OF PIPE. ELEVATIONS ABOVE GROUND LEVEL ARE NOTED IN FEET & INCHES AND SHALL DENOTE WORK POINT ELEVATION OF PIPE, UNLESS NOTED OTHERWISE. BOTTOM OF PIPE ELEVATIONS REFER TO BOTTOM OF PIPE ON UNINSULATED LINES AND TO BOTTOM OF SADDLE ON INSULATED LINES.

2. PIPING SHOWN ON DRAWINGS WITHOUT DIMENSIONAL LOCATION SHALL BE FIELD ROUTED BY CONTRACTOR. CONTRACTOR SHALL VERIFY PROPOSED PIPE ROUTINGS AND CHECK OTHER TRADES WORK PRIOR TO INSTALLATION, INCLUDING INTERFERENCE WITH BUILDING STRUCTURES, EQUIPMENT AND WORK OF OTHER TRADES WHETHER NEW OR EXISTING. PROPOSED ROUTINGS SHALL BE REVIEWED WITH THE CONSTRUCTION MANAGER.

3. REDUCERS, REDUCING INSERTS, UNIONS & APPURTENANCES NOT SHOWN ON DRAWINGS BUT REQUIRED FOR PROPER INSTALLATION SHALL BE PROVIDED BY CONTRACTOR.

4. PLUMBING LINE SIZE REDUCTIONS NOT SHOWN WITH REDUCERS SHALL BE MADE WITH REDUCING FITTINGS.

5. PIPE SLEEVES FOR PLUMBING LINES SHALL BE FURNISHED AND INSTALLED BY CONTRACTOR. PROVIDE LOCATION AND SIZE TO CONCRETE CONTRACTOR AND STRUCTURAL ENGINEER PRIOR TO INSTALLATION.

6. PIPE PENETRATION THROUGH NON-RATED WALLS AND FLOORS SHALL BE SEALED AIR TIGHT.

7. ANNULAR SPACES AROUND PIPES, ELECTRIC CABLES, OR OTHER OPENINGS IN PLATES AT EXTERIOR WALLS SHALL BE PROTECTED AGAINST THE PASSAGE OF RODENTS BY CLOSING SUCH OPENINGS WITH CEMENT MORTAR, CONCRETE MASONRY OR A SIMILAR METHOD ACCEPTABLE TO THE ENFORCING AGENCY.

8. PVC PIPING EXPOSED TO SUNLIGHT MUST BE PROTECTED BY WATER BASED SYNTHETIC LATEX PAINT OR WRAPPED WITH NOT LESS THAN 0.04 INCH(1.02 MM) THICK TAPE OR OTHERWISE PROTECTED FROM UV DEGRADATION. CPC SECTION §312.14

9. WATER SUPPLY AND DRAIN PIPES UNDER ACCESSIBLE LAVATORIES AND SINKS SHALL BE INSULATED OR OTHERWISE BE CONFIGURED TO PROTECT AGAINST CONTACT. PROTECTORS, INSULATORS, OR BOTH SHALL COMPLY WITH ASME A112.18.9. CPC SECTION §403.3

10. TRENCHES DEEPER THAT THE FOOTING OF A BUILDING OR STRUCTURE, AND PARALLELING THE SAME, SHALL BE LOCATED NOT LESS THAN 45 DEGREES FROM THE BOTTOM EXTERIOR OF FOOTING, OR AS APPROVED IN ACCORDANCE WITH SECTION 301.2. CPC SECTION §314.1

11. PLASTIC PIPE AND FITTINGS JOINED WITH SOLVENT CEMENT SHALL UTILIZE LOW VOC PRIMER(S), IF A PRIMER IS REQUIRED, AND LOW VOC CEMENT(S) AS DEFINED IN SECTION 214.0. CPC SECTION §705.1.2

12. FIXTURES HAVING CONCEALED SLIP JOINT CONNECTIONS SHALL BE PROVIDED WITH AN ACCESS PANEL OR UTILITY SPACE NOT LESS THAN 12 INCHES IN ITS LEAST DIMENSION AND SO ARRANGED WITHOUT OBSTRUCTIONS AS TO MAKE SUCH CONNECTIONS ACCESSIBLE FOR INSPECTION AND REPAIR.

CAL GREEN AND CALIFORNIA ENERGY NOTES

1. WATER HEATERS, SHOWERHEADS, FAUCETS AND ALL OTHER REGULATED APPLIANCES ARE CERTIFIED BY THE ENERGY COMMISSION. CEC §110-§113:

2. SUBMETERS SHALL BE INSTALLED TO MEASURE WATER USAGE OF INDIVIDUAL RENTAL DWELLING UNITS IN ACCORDANCE WITH THE CALIFORNIA PLUMBING CODE. REFER TO CALIFORNIA SENATE BILL 7 SECTION 537 FOR APPLICABLE EXEMPTIONS TO THIS REQUIREMENT.

3. WATER HEATING RECIRCULATION LOOPS SERVING MULTIPLE DWELLING UNITS AND HIGH-RISE RESIDENTIAL OCCUPANCIES SHALL MEET THE AIR RELEASE VALVE, BACKFLOW PREVENTION, PUMP ISOLATION VALVE, AND RECIRCULATION LOOP CONNECTION REQUIREMENTS OF CEC SECTION §110.3(c)4.

4. CONTINUOUSLY BURNING PILOT LIGHTS ARE PROHIBITED FOR NATURAL GAS: FAN-TYPE CENTRAL FURNACES, HOUSEHOLD COOKING APPLIANCES (APPLIANCES WITH AN ELECTRICAL SUPPLY VOLTAGE CONNECTION WITH PILOT LIGHTS THAT CONSUME LESS THAN 150 BTU/HR ARE EXEMPT), AND POOL AND SPA HEATERS. CEC SECTION §110.5.

5. STORAGE GAS WATER HEATERS RATED WITH AN ENERGY FACTOR NO GREATER THAN THE FEDERAL MINIMAL STANDARD ARE EXTERNALLY WRAPPED WITH INSULATION HAVING AN INSTALLED THERMAL RESISTANCE OF R-12 OR GREATER. CEC SECTION §150(J)1A.

6. UNFIRED STORAGE TANKS, SUCH AS STORAGE TANKS OR BACKUP TANKS FOR SOLAR WATER-HEATING SYSTEM, OR OTHER INDIRECT HOT WATER TANKS HAVE R-12 EXTERNAL INSULATION OR R-16 INTERNAL INSULATION WHERE THE INTERNAL INSULATION R-VALUE IS INDICATED ON THE EXTERIOR OF THE TANK. CEC SECTION §150(J)1B.

7. ANY INSTALLED GAS FIREPLACE SHALL BE A DIRECT-VENT SEALED-COMBUSTION TYPE.

8. COOLING SYSTEM PIPING (SUCTION, CHILLED WATER, OR BRINE LINES),AND PIPING INSULATED BETWEEN HEATING SOURCE AND INDIRECT HOT WATER TANK SHALL BE INSULATED TO TABLE 120.3-A AND EQUATION 120.3-A. CEC SECTION §120.3(a).

9. PIPE INSULATION FOR STEAM HYDRONIC HEATING SYSTEMS OR HOT WATER SYSTEMS >15 PSI, MEETS THE REQUIREMENTS OF STANDARDS TABLE 120.3-A. CEC SECTION §120.3(a).

10. SOLAR WATER-HEATING SYSTEMS AND/OR COLLECTORS ARE CERTIFIED BY THE SOLAR RATING AND CERTIFICATION CORPORATION. CEC SECTION §150(n)4.

11. INSULATION SHALL BE PROTECTED FROM DAMAGE, INCLUDING THAT DUE TO SUNLIGHT, MOISTURE, EQUIPMENT MAINTENANCE, AND WIND. CELLULAR FOAM INSULATION SHALL BE PROTECTED AS ABOVE OR PAINTED WITH A COATING THAT IS WATER RETARDANT AND PROVIDES SHIELDING FROM SOLAR RADIATION THAT CAN CAUSE DEGRADATION OF THE MATERIAL. CEC SECTION §120.3(b).

12. ALL PLUMBING FIXTURES SHALL BE CERTIFIED BY THE CALIFORNIA ENERGY COMMISSION AND MEET THE CALIFORNIA GREEN BUILDING STANDARDS CODE WATER CONSUMPTION RATES.

13. CIRCULATING SERVICE WATER-HEATING SYSTEMS SHALL HAVE A CONTROL CAPABLE OF AUTOMATICALLY TURNING OFF THE CIRCULATING PUMP WHEN HOT WATER IS NOT REQUIRED. CEC SECTION §110.3(c)2.

14. ALL DOMESTIC HOT WATER PIPING SHALL BE INSULATED AS SPECIFIED IN SECTION 609.11 OF THE CALIFORNIA PLUMBING CODE. IN ADDITION, THE FOLLOWING PIPING CONDITIONS SHALL HAVE A MINIMUM INSULATION WALL THICKNESS OF 1 INCH OR A MINIMUM INSULATION R-VALUE OF 7.7:

i. THE FIRST 5 FEET (1.5 METERS) OF HOT AND COLD WATER PIPES FROM THE STORAGE TANK.

ii. ALL HOT WATER PIPING WITH A NOMINAL DIAMETER EQUAL TO OR GREATER THAN ¾ INCH AND LESS THAN 1 INCH.

iii. ALL HOT WATER PIPING WITH A NOMINAL DIAMETER LESS THAN ¾ INCH THAT IS:

A. ADDOSIACTED WITH A DOMESTIC HOT WATER RECIRCULATION SYSTEM
B. FROM THE HEATING SOURCE TO THE KITCHEN FIXTURES
C. FROM THE HEATER SOURCE TO A STORAGE TANK OR BETWEEN STORAGE TANKS; OR
D. BURIED BELOW GRADE

PLUMBING SHEET INDEX

NO.	SHEET	DESCRIPTION
1	P-0.1	GENERAL NOTES & SHEET INDEX
2	P-0.2	MATERIAL AND FIXTURE SCHEDULES AND CALCULATIONS
3	P-0.3	CALCULATIONS
4	P-2.1	BUILDING TYPE 1 - FLOOR PLANS - WATER LATERAL AND SEWER LATERAL AND NATURAL GAS
5	P-2.2	BUILDING TYPE 2 - FLOOR PLANS - WATER LATERAL AND SEWER LATERAL AND NATURAL GAS
6	P-3.1A	UNIT A - FLOOR PLANS - COLD / HOT WATER
7	P-3.1B	UNIT A - FLOOR PLANS - WASTE / VENT PIPING AND FC CONDENSATE
8	P-3.2A	UNIT B - FLOOR PLANS - COLD / HOT WATER
9	P-3.2B	UNIT B - FLOOR PLANS - WASTE / VENT PIPING AND FC CONDENSATE
10	P-4.1	DIAGRAMS - UNIT A
11	P-4.1	DIAGRAMS - UNIT A - ADU
12	P-4.1	DIAGRAMS - UNIT B
13	P-D.1	DETAILS

ISSUED DATE: XX/XX/XX

GOUVIS engineering consulting group, inc.®

15 Studebaker
Irvine
CA 92618

Irvine
tel 949.752.1612
fax 949.752.5321

Palm Springs
tel 760.323.5090

LICENSED PROFESSIONAL ENGINEER — LAWRENCE PAUL CAVANAUGH — M 39147 — MECHANICAL — STATE OF CALIFORNIA

DATE SIGNED: 2/1/23

RESTRICTIVE NOTICE

THESE DESIGNS, DRAWINGS, AND SPECIFICATIONS ARE THE EXCLUSIVE PROPERTY OF GOUVIS ENGINEERING CONSULTING GROUP. THEY ARE THE SUBJECTOF COPYRIGHT AND OTHER LEGAL PROTECTION. THEY MAY BE USED ONLY BY THEIR INTENDED RECIPIENT AND ONLY FOR THE PROJECT DEPICTED HEREIN. NO PART OF THESE DRAWINGS ARE TO BE COPIED, TRANSFERRED, REPRODUCED, NOR CAN THEY BE USED, IN WHOLE OR IN PART, BY ANY OTHER PERSON OR FOR ANY OTHER PROJECT OR STRUCTURE, WITHOUT THE PRIOR EXPRESS WRITTEN CONSENT OF GOUVIS ENGINEERING CONSULTING GROUP

© 2017 GOUVIS ENGINEERING CONSULTING GROUP INC. - ALL RIGHTS RESERVED

PROJECT:
Tenant Square

DEVELOPER:
Osito Holdings LLC

ARCHITECT:
Gary Moore & Associates

LOCATION:
Morgan Hill
Santa Clara
CA

REVISIONS

NO.	DATE	DESCRIPTION
1	02/02/23	PLAN CHECK

SHEET NAME:
GENERAL NOTES & SHEET INDEX

PROJECT NUMBER:
66074

ENGINEER:

DRAFTER:

SHEET NUMBER:
P-0.1

GENERAL PIPE SIZING TABLES

DRAINAGE AND VENT PIPE SIZING TABLE

CPC TABLE 703.2

NOMINAL PIPE DIAMETER	DRAINAGE PIPING MAXIMUM UNITS (DFU) ①			DRAINAGE PIPING MAX VERTICAL LENGTH (FT)	VENT PIPING HORIZONTAL AND VERTICAL (SEE NOTE)	
	VERTICAL	2% SLOPE	1% SLOPE		MAXIMUM UNITS (DFU)	MAXIMUM LENGTH (FT)
1-1/4"	1	1		45	1	45
1-1/2"	2 ②	1		65	8 ③	60
2"	16 ②	8 ③		85	24	120
3"	48 ②	35 ③		212	84	212
4"	256	216 ③	172 ③	300	256	300
5"	600	428 ③	342 ③	390	600	390
6"	1380	720 ③	576 ③	510	1380	510
8"	3600	2640 ③	2112 ③	750	3600	750

① EXCLUDING TRAP ARM.
② EXCEPT SINKS, URINALS AND DISHWASHERS - EXCEEDING 1 FIXTURE UNIT.
③ EXCEPT SIX-UNIT TRAPS OR WATER CLOSETS.
④ ONLY FOUR (4) WATER CLOSETS OR SIX-UNIT TRAPS ALLOWED ON ANY VERTICAL PIPE OR STACK, AND NOT TO EXCEED THREE (3) WATER CLOSETS OR SIX-UNIT TRAPS ON ANY HORIZONTAL BRANCH OR DRAIN.
⑤ BASED ON ONE-FOURTH (1/4) INCH PER FOOT (2%) SLOPE. FOR ONE-EIGHTH (1/8) INCH PER FOOT (1%) SLOPE, MULTIPLY HORIZONTAL FIXTURE UNITS BY A FACTOR OF 0.8.
⑥ WHERE IMPRACTICAL TO MAINTAIN 1/4 INCH PER FOOT UNIFORM SLOPE, DRAINAGE PIPE FOUR (4) INCHES OR LARGER MAY HAVE A SLOPE NOT LESS THAN 1/8 INCH PER FOOT, WHEN FIRST APPROVED BY AUTHORITY HAVING JURISDICTION.

NOTES:
THE DIAMETER OF AN INDIVIDUAL VENT SHALL NOT BE LESS THAN ONE AND ONE-FOURTH (1-1/4) INCHES NOR LESS THAN ONE-HALF (1/2) THE DIAMETER OF THE DRAIN TO WHICH IT IS CONNECTED. FIXTURE UNIT LOAD VALUES FOR DRAINAGE AND VENT PIPING SHALL BE COMPUTED FROM CALIFORNIA PLUMBING CODE TABLES 702.1 AND 702.2(b). NOT TO EXCEED ONE-THIRD (1/3) OF THE TOTAL PERMITTED LENGTH OF ANY VENT MAY BE INSTALLED IN A HORIZONTAL POSITION. WHEN VENTS ARE INCREASED ONE (1) PIPE SIZE FOR THEIR ENTIRE LENGTH, THE MAXIMUM LENGTH LIMITATIONS SPECIFIED IN THIS TABLE DO NOT APPLY.

PIPE INSULATION THICKNESS

WATER HEATING SYTEMS (105°-140° OPERATING RANGE)	NOMINAL PIPE DIAMETER (INCHES)					
	LESS THAN 1"	1" TO 1.5"	1.75"	2 TO <4"	4" TO <8"	8" & LARGER
INSULATION WALL THICKNESS	1"	1.5"	1.75"	2"	2"	2"
R-VALUE	R 7.7	R 12.5	R 11	R 11	R 9	R 8

1. THE INSULATION FOR HOT WATER PIPES SHALL MEET THE MINIMUM THICKNESS PER CPC 609.11 AND CEC TABLE 120.3-A OR THE MINIMUM R-VALUE PER CEC TABLE 120.3.-A.
2. INSULATION THICKNESSES SHOWN REPRESENT THE LARGER REQUIREMENT FOR DESIGNATED PIPE SIZES PER CPC SECTION 609.11 AND CEC TABLE 120.3-A.
3. THE R-VALUES FOR ALL PIPE DIAMETERS ARE BASED ON TABLE 120.3-A OF THE CALIFORNIA ENERGY CODE.

FIXTURE UNITS VS. GPM CONVERSION TABLE

FLOW IN GPM		1	2	3	4	5	6	7	8	9	10	11	12	13	14	15
FIXTURE UNITS	FLUSH TANK	0	1	3	4	6	7	8	10	12	13	15	16	18	20	21
	FLUSH VALVE	-	-	-	-	-	-	-	-	-	-	-	-	-	-	-
FLOW IN GPM		16	17	18	19	20	21	22	23	24	25	26	27	28	29	30
FIXTURE UNITS	FLUSH TANK	23	24	26	28	30	32	34	36	39	42	44	46	49	51	54
	FLUSH VALVE	-	-	-	-	-	-	5	6	7	8	9	10	11	12	13
FLOW IN GPM		31	32	33	34	35	36	37	38	39	40	41	42	43	44	45
FIXTURE UNITS	FLUSH TANK	56	58	60	63	66	69	74	78	83	86	90	95	99	103	107
	FLUSH VALVE	14	15	16	18	20	21	23	25	26	28	30	31	33	35	37
FLOW IN GPM		46	47	48	49	50	51	52	53	54	55	56	57	58	59	60
FIXTURE UNITS	FLUSH TANK	111	115	119	123	127	130	135	141	146	151	155	160	165	170	175
	FLUSH VALVE	39	42	44	46	48	50	52	54	57	60	63	66	69	73	76
FLOW IN GPM		62	64	66	68	70	72	74	76	78	80	82	84	86	88	90
FIXTURE UNITS	FLUSH TANK	185	195	205	215	225	236	245	254	264	275	284	294	305	315	326
	FLUSH VALVE	82	88	95	102	108	116	124	132	140	148	158	168	176	186	195
FLOW IN GPM		92	94	96	98	100	105	110	115	120	125	130	135	140	145	150
FIXTURE UNITS	FLUSH TANK	337	348	359	370	380	406	431	455	479	506	533	559	585	611	638
	FLUSH VALVE	205	214	223	234	245	270	295	329	365	396	430	460	490	521	559
FLOW IN GPM		155	160	165	170	175	180	185	190	200	210	220	230	240	250	260
FIXTURE UNITS	FLUSH TANK	665	692	719	748	778	809	840	879	945	1018	1091	1173	1254	1335	1418
	FLUSH VALVE	596	631	666	700	739	775	811	850	931	1009	1091	1173	1254	1335	1418
FLOW IN GPM		270	280	290	300	310	320	330	340	350	360	370	380	390	400	410
FIXTURE UNITS	FLUSH TANK FLUSH VALVE	1500	1583	1668	1755	1845	1926	2018	2110	2204	2298	2388	2480	2575	2670	2765
FLOW IN GPM		420	430	440	450	500	550	600	650	700	750	800	850	900	950	1000
FIXTURE UNITS	FLUSH TANK FLUSH VALVE	2862	2960	3060	3150	3620	4070	4480	4930	5380	5830	6280	6780	7280	7790	8300

GPM EQUIVALENTS ARE BASED ON CPC CHARTS A 103.1(1) AND A 103.1(2).

FIXTURE FLOW RATES (2019 CAL GREEN MANDATORY MEASURES)

FIXTURE TYPE	MAXIMUM FLOW RATE	
SHOWERHEADS, RESIDENTIAL	1.8 GPM @ 80 PSI	WHEN A SHOWER IS SERVED BY MORE THAN ONE SHOWERHEAD, THE COMBINED FLOW RATE OF ALL SHOWERHEADS AND/OR OTHER SHOWER OUTLETS CONTROLLED BY A SINGLE VALVE SHALL NOT EXCEED 1.8 GPM AT 80 PSI, OR THE SHOWER SHALL BE DESIGNED TO ALLOW ONLY ONE SHOWER OUTLET TO BE IN OPERATION AT A TIME
LAVATORY FAUCETS, RESIDENTIAL	1.2 GPM @ 60 PSI	THE MINIMUM FLOW RATE OF RESIDENTIAL LAVATORY FAUCETS SHALL NOT BE LESS THAN 0.8 GPM AT 20 PSI.
LAVATORY FAUCETS, PUBLIC AREAS	0.5 GPM @ 60 PSI	
KITCHEN FAUCETS	1.8 GPM @ 60 PSI	KITCHEN FAUCETS MAY TEMPORARILY INCREASE THE FLOW ABOVE THE MAXIMUM RATE, BUT NOT TO EXCEED 2.2 GPM AT 60 PSI, AND MUST DEFAULT TO A MAXIMUM FLOW RATE OF 1.8 GPM AT 60 PSI.
WATER CLOSETS	1.28 GALLONS/FLUSH	THE EFFECTIVE FLUSH VOLUME OF DUAL FLUSH TOILETS IS DEFINED AS THE COMPOSITE, AVERAGE FLUSH VOLUME OF TWO REDUCED FLUSHES AND ONE FULL FLUSH.
URINALS	0.125 GALLON/FLUSH	
METERING FAUCETS	0.2 GALLON/CYCLE	
1. FLOW RATES ARE BASED ON THE 2019 CALIFORNIA GREEN BUILDING CODE STANDARDS SECTION 4.303 & 5.303.		

MATERIAL AND FIXTURE SCHEDULES

PIPING MATERIAL SCHEDULE

DOMESTIC WATER PIPING INSIDE BUILDING ABOVE FLOOR SIZES 1/2" TO 2"	UPONOR 'AQUAPEX' PEX TUBING WITH PROPEX (EP) FITTINGS, OR ALTERNATE BRANDS CONFORMING TO ASTM F876 AND ASTM F877 STANDARDS AND SDR9 DIMENSIONAL STANDARD
SEWER, WASTE AND VENT PIPING INSIDE BUILDING ABOVE FLOOR	HUBLESS CAST IRON PIPE & FITTINGS WITH NEOPRENE SLEEVES & STAINLESS STEEL COUPLINGS OR SCHEDULE 40 PVC OR ABS PLASTIC PIPE WITH DWV TYPE FITTINGS.
SEWER, WASTE AND VENT PIPING INSIDE BUILDING BELOW GRADE	SCHEDULE 40 PVC OR ABS PLASTIC PIPE WITH DWV TYPE FITTINGS.

1. BUILDING DRAIN AND VENT PIPING MATERIALS SHALL COMPLY WITH CPC SECTIONS 701.0 AND 903.0.
2. ALL SANITARY SYSTEM MATERIALS SHALL BE LISTED BY AN APPROVED LISTING AGENCY.
3. ANY COPPER PIPING JOINTS UNDER CONCRETE SLAB SHALL BE BRAZED INSTEAD OF SOLDERED.
4. TYPE L COPPER TUBING MAY BE USED FOR ABOVE GROUND WATER PIPING INSIDE OR ON THE BUILDING.
5. CPVC TUBING MAY BE USED FOR CONDENSATE DRAIN PIPING WHEN DISCHARGE FROM FLUE-BURNING APPLIANCES IS ACIDIC OR CORROSIVE.
6. ALL COPPER PIPING INSTALLED BELOW GRADE SHALL BE COATED.

FIXTURE SCHEDULE

ITEM	FIXTURE	COLD WATER	HOT WATER	WASTE	VENT	STORM DRAIN	DESCRIPTION
BT 1	TUB/SHOWER COMBO	3/4"	3/4"	2"	1-1/2"	-	SELECTION TBD BY OWNER.1.8 GPM SHOWER HEAD. PROVIDE A THERMOSTATIC OR PRESSURE BALANCE TYPE MIXING VALVE FOR THERMAL SHOCK AND SCALD PROTECTION.
WSH 1	CLOTHES WASHER BOX	3/4"	3/4"	2"	1-1/2"	-	SELECTION TBD BY OWNER. PROVIDE WATER HAMMER ARRESTOR.
HB 1	HOSE BIBB	3/4"	-	-	-	-	WALL MOUNTED WITH ATMOSPHERIC VACUUM BREAKER. ARROWHEAD ARROWBREAKER MODEL OR EQUIVALENT.
HD 1	HUB DRAIN	-	-	2"	1-1/2"	-	SIOUX CHIEF OXBOX DRAIN BOX WITH SECONDARY DRAIN FUNNEL. PROVIDE TRAP PRIMER.
IMB 1	ICE MAKER BOX	1/2"	-	-	-	-	SELECTION TBD BY OWNER. PROVIDE WATER HAMMER ARRESTOR.
KS 1	KITCHEN SINK	3/4"	3/4"	2"	1-1/2"	-	1.8 GPM FAUCET. SELECTION TBD BY OWNER.
DW 1	DISHWASHER	-	3/4"	-	-	-	SELECTION TBD BY OWNER. DRAIN TO KITCHEN SINK VIA APPROVED AIR GAP. PROVIDE WATER HAMMER ARRESTOR.
L 1	LAVATORY	1/2"	1/2"	2"	1-1/2"	-	1.2 GPM FAUCET. SELECTION TBD BY OWNER.
SH 1	SHOWER	3/4"	3/4"	2"	1-1/2"	-	1.8 GPM SHOWER HEAD. PROVIDE A THERMOSTATIC OR PRESSURE BALANCE TYPE MIXING VALVE FOR THERMAL SHOCK AND SCALD PROTECTION.
WC 1	WATER CLOSET	3/4"	-	3"	2"	-	1.28 GPF, GRAVITY TANK TYPE SELECTION TBD BY OWNER.

HYBRID ELECTRIC WATER HEATER SCHEDULE

EQUIPMENT NUMBER		WH 1
LOCATION		GARAGE
MANUFACTURER		RUUD
MODEL		PROUH80 T2 RU375-30
TYPE		HYBRID ELECTRIC
1ST HOUR RATING GPH		89
RECOVERY 90°F RISE, GPH		27
AMBIENT OPERATING RANGE		37-145°F
ENERGY FACTOR (ELECTRIC)		N/A
ENERGY FACTOR (EFFICIENT)		4.0
PHYS DATA	DIMENSIONS	24-1/4"D X 74-3/16"H
	WEIGHT (EMPTY)	244
CONN. SIZE	WATER CONN.	3/4" NPT
ELEC. DATA	SUPPLY	208-240V - 1PH
	BREAKER SIZE	30 AMP

EXPANSION TANK SCHEDULE

EQUIP. NUMBER		ET 1
LOCATION		NEAR WH
MANUFACTURER		AMTROL
SERIES		THERM-X-TROL
MODEL		ST-5
TYPE		IN-LINE
TOTAL VOLUME		2.0 GALLONS
ACCEPTANCE FACTOR		0.45
MAX TEMPERATURE		200°F
MAX PRESSURE		150 PSIG
FACTORY PRECHARGE		50 PSIG
PHYS DATA	DIAMETER	8"
	HEIGHT	13"
	CONNECTION	3/4" NPT
	SHIPPING WEIGHT	5 LBS

*ANY WATER SYSTEM PROVIDED WITH A CHECK VALVE OR BACKFLOW PREVENTER SHALL BE PROVIDED WITH AN APPROVED, LISTED, ADEQUATELY SIZED EXPANSION TANK OR OTHER APPROVED DEVICE HAVING A SIMILAR FUNCTION TO CONTROL THERMAL EXPANSION.

PLUMBING FIXTURES

- FLOOR DRAIN, SQUARE
- FLOOR SINK, KITCHEN
- FLOOR DRAIN
- TAG # RISER ID TAG
- TAG # EQUIPMENT ID TAG
- CONNECT TO EXISTING
- P-TRAP
- VENT
- WALL CLEANOUT
- SANITARY TEE
- WYE
- WYE W/CLEANOUT PLUG
- GROUND CLEANOUT

SUPPLY FIXTURES

- 90 DEG ELBOW DOWN
- 90 DEG ELBOW UP
- TEE, SIDE
- TEE, DOWN
- TEE, UP
- PIPE CAP
- UNION
- WATER HAMMER ARRESTER
- HOSE BIBB
- PIPE STUB
- BUILDING SUPPLY
- PIPE POINT OF CONNECTION
- BACKFLOW PREVENTOR
- WATER SUB-METER
- TWH TERMINATION

PLUMBING LEGEND

SYMBOL	REMARKS	SYMBOL	REMARKS
CD	CONDENSATE DRAIN		WASTE_BELOW
			WASTE_ABOVE
		GW	GREY_BELOW
	SYMBOLS	GW GW	GREY_ABOVE
	TEXT	GSW	GREASE_BELOW
CW	CW	GSW GSW	GREASE_ABOVE
HW	HW		VENT
HWR	HW_RETURN	RD	ROOF DRAIN
RW	RECYCLED WATER		SUBSURFACE
	EQUIP	SD	SD_ABOVE
		OFD	OVERFLOW STORM DRAIN

ABBREVIATIONS

SYMBOL	REMARKS	SYMBOL	REMARKS	SYMBOL	REMARKS
ABV	ABOVE	FAU	FORCED AIR UNIT	POC	POINT OF CONNECTION
BLW	BELOW	FLR	FLOOR	PSI	POUND PER SQUARE INCH
BTUH	BRITISH THERMAL UNITS PER HOUR	FPS	FEET PER SECOND	RW	RECYCLED WATER
CD	CONDENSATE DRAIN	GPM	GALLONS PER MINUTE	SD	STORM DRAIN
CLG	CEILING	GSW	GREASE WASTE	SSD	SUBSURFACE DRAIN
CPC	CA PLUMBING CODE	GW	GREYWATER	SOV	SHUTOFF VALVE
CEC	CA ENERGY CODE	GCO	GROUND CLEANOUT	SQ FT	SQUARE FEET
CW	DOMESTIC COLD WATER	IE	INVERT ELEVATION	TBD	TO BE DETERMINED
HW	DOMESTIC HOT WATER			V	VENT
HWR	DOMESTIC HW RETURN			VTR	VENT TO ROOF
DN	DOWN	(N)	NEW	W	WASTE
(E)	EXISTING	OFD	OVERFLOW DRAIN	WCO	WALL CLEANOUT

VALVE SYMBOL

SYMBOL	REMARKS	SYMBOL	REMARKS	SYMBOL	REMARKS
	GATE		3-WAY		PRESSURE REDUCING VALVE (PRV)
	BALL		4-WAY		RELIEF OR SAFETY (NORMALLY CLOSED)
	GLOBE		ANGLE GATE		TRIPLE DUTY VALVE
	DIAPHRAGM		ANGLE GLOBE	S	SOLENOID
	BUTTERFLY		CHECK		DIAPHRAGM VALVE W/PURGE PORTS

GOUVIS engineering consulting group, inc.®
15 Studebaker
Irvine
CA 92618

Irvine
tel 949.752.1612
fax 949.752.5321

Palm Springs
tel 760.323.5090

LICENSED PROFESSIONAL ENGINEER — LAWRENCE PAUL CAVANAUGH — M 39147 — MECHANICAL — STATE OF CALIFORNIA

DATE SIGNED: 2/1/23

RESTRICTIVE NOTICE

THESE DESIGNS, DRAWINGS, AND SPECIFICATIONS ARE THE EXCLUSIVE PROPERTY OF GOUVIS ENGINEERING CONSULTING GROUP. THEY ARE THE SUBJECTOF COPYRIGHT AND OTHER LEGAL PROTECTION. THEY MAY BE USED ONLY BY THEIR INTENDED RECIPIENT AND ONLY FOR THE PROJECT DEPICTED HEREIN. NO PART OF THESE DRAWINGS ARE TO BE COPIED, TRANSFERRED, REPRODUCED, NOR CAN THEY BE USED, IN WHOLE OR IN PART, BY ANY OTHER PERSON OR FOR ANY OTHER PROJECT OR STRUCTURE, WITHOUT THE PRIOR EXPRESS WRITTEN CONSENT OF GOUVIS ENGINEERING CONSULTING GROUP

© 2017 GOUVIS ENGINEERING CONSULTING GROUP INC. - ALL RIGHTS RESERVED

PROJECT:
Tenant Square

DEVELOPER:
Osito Holdings LLC

ARCHITECT:
Gary Moore & Associates

LOCATION:
Morgan Hill
Santa Clara
CA

REVISIONS

NO.	DATE	DESCRIPTION

SHEET NAME:
MATERIAL AND FIXTURE SCHEDULES

PROJECT NUMBER:
66074

ENGINEER:

DRAFTER:

SHEET NUMBER:
P-0.2

ISSUED DATE:XX/XX/XX

WATER AND SEWER DEMAND CALCULATIONS

FIXTURE UNIT CALCULATION - UNIT A, A - ADU

FIXTURE TYPE	QTY	DEMAND WEIGHT IN WSFU[1]						DRAINAGE[1]	
		FIXTURE DEMAND	HOT OR 75%[2]	COLD OR 75%[2]	TOTAL SUPPLY DEMAND	TOTAL HOT WATER DEMAND	TOTAL COLD BRANCH DEMAND	DFU	TOTAL
WATER CLOSET, FLUSH TANK	3	2.5	0	2.5	7.5	0	7.5	3	9
BATHTUB OR TUB-SHOWER COMBO	1	4	3	3	4.0	3.0	3.0	2	2
SHOWER, PER HEAD	1	2	1.5	1.5	2.0	1.5	1.5	2	2.0
LAVATORY	5	1	0.8	0.8	5.0	4.0	4.0	1	5.0
KITCHEN SINK	1	1.5	1.2	1.2	1.5	1.2	1.2	2	2
DISHWASHER (DRAIN TO KITCHEN SINK)	1	1.5	1.5	0	1.5	1.5	0.0	N/A	
CLOTHES WASHER	1	4	3	3	4.0	3.0	3.0	3	3
HUB DRAIN	1	0	0	0	0.0	0.0	0.0	1	1.0
PRIMARY HOSE BIBB	1	2.5	0	2.5	2.5	0.0	2.5	0	0.0
ADDITIONAL HOSE BIBB	1	1	0	1	1.0	0.0	1.0	0	0.0
TOTAL FIXTURE UNITS					29.0	14.2	23.7		24.0
EQUIVALENT WATER DEMAND IN GPM[3]					20	11	17		
EQUIVALENT WATER DEMAND FOR FIRE SPRINKLER IN GPM[3]					32				
EQUIVALENT WATER DEMAND IN GPM[3] OF MAIN WATER CONNECTION					32				

FIXTURE UNIT CALCULATION - UNIT B

FIXTURE TYPE	QTY	DEMAND WEIGHT IN WSFU[1]						DRAINAGE[1]	
		FIXTURE DEMAND	HOT OR 75%[2]	COLD OR 75%[2]	TOTAL SUPPLY DEMAND	TOTAL HOT WATER DEMAND	TOTAL COLD BRANCH DEMAND	DFU	TOTAL
WATER CLOSET, FLUSH TANK	3	2.5	0	2.5	7.5	0	7.5	3	9
BATHTUB OR TUB-SHOWER COMBO	1	4	3	3	4.0	3.0	3.0	2	2
SHOWER, PER HEAD	1	2	1.5	1.5	2.0	1.5	1.5	2	2.0
LAVATORY	4	1	0.8	0.8	4.0	3.2	3.2	1	4.0
KITCHEN SINK	1	1.5	1.2	1.2	1.5	1.2	1.2	2	2
DISHWASHER (DRAIN TO KITCHEN SINK)	1	1.5	1.5	0	1.5	1.5	0.0	N/A	
CLOTHES WASHER	1	4	3	3	4.0	3.0	3.0	3	3
HUB DRAIN	1	0	0	0	0.0	0.0	0.0	1	1.0
PRIMARY HOSE BIBB	1	2.5	0	2.5	2.5	0.0	2.5	0	0.0
ADDITIONAL HOSE BIBB	1	1	0	1	1.0	0.0	1.0	0	0.0
TOTAL FIXTURE UNITS					28.0	13.4	22.9		23.0
EQUIVALENT WATER DEMAND IN GPM[3]					19	11	16		
EQUIVALENT WATER DEMAND FOR FIRE SPRINKLER IN GPM[3]					32				
EQUIVALENT WATER DEMAND IN GPM[3] OF MAIN WATER CONNECTION					32				

BUILDING SUMMARY - BUILDING 1

FIXTURE TYPE	QTY	DEMAND WEIGHT IN WSFU[1]		DRAINAGE[1]	
		FIXTURE DEMAND	TOTAL SUPPLY DEMAND	DFU	TOTAL
UNIT A	1	29.0	29.0	24	24
UNIT A-ADU	1	29	29.0	24	24
UNIT B	6	28	168.0	23	138.0
TOTAL FIXTURE UNITS			226.0		186.0
EQUIVALENT WATER DEMAND IN GPM[3]			72		

BUILDING SUMMARY - BUILDING 2

FIXTURE TYPE	QTY	DEMAND WEIGHT IN WSFU[1]		DRAINAGE[1]	
		FIXTURE DEMAND	TOTAL SUPPLY DEMAND	DFU	TOTAL
UNIT A	1	29.0	29.0	24	24
UNIT A-ADU	1	29	29.0	24	24
UNIT B	6	28	168.0	23	138.0
TOTAL FIXTURE UNITS			226.0		186.0
EQUIVALENT WATER DEMAND IN GPM[3]			72		

1. FIXTURE UNITS ARE BASED ON CPC TABLE A 103.1 FOR WATER SUPPLY AND TABLE 702.1 FOR DRAINAGE.
2. SEPERATE HOT AND COLD WATER FIXTURE UNITS ARE TAKEN AS AT LEAST THREE-QUARTERS (3/4) OF TOTAL FIXTURE DEMAND, PER CPC TABLE A 103.1, NOTE 3.
3. GPM EQUIVALENTS ARE BASED ON CPC CHARTS A 103.1(1) AND A 103.1(2).

WATER PRESSURE CALCULATIONS

WATER PRESSURE CALCULATIONS - UNIT A & ADU

PLUMBING SYSTEM	PIPING ELEVATION DIFFERENCE	23	FT
	DEVELOPED RUN OF PIPE FROM WATER METER TO BUILDING FACE	335	FT
	DEVELOPED RUN OF PIPE FROM BUILDING FACE TO FURTHEST FIXTURE	150	FT
	MIN PRESSURE AT MAIN[1] (PER FIREFLOW TEST RECEIVED 06/27/22)	67	PSIG
PRESSURE LOSSES	PIPE LOSSES FROM SITE ROUTING PER 2" CPVC @ 32 GPM (1.0 PSI/100FT)	3.35	PSIG
	1" WATER METER @ 32 GPM (PER NEPTUNE T-10)	3	PSIG
	1" BACKFLOW PREVENTOR @ 32 GPM (PER FEBCO 860)	12	PSIG
	WATER HEATER LOSSES	5	PSIG
	X" PRV @ 32 GPM (INSTALL PRV IF STREET PRESSURE EXCEEDS 80 PSI)	0	PSIG
	ELEVATION HEAD LOSS	9.9	PSIG
REQUIRED PRESSURE	PRESSURE BALANCE SHOWER CONTROL VALVE	20	PSIG
PRESSURE AVAILABLE FOR FRICTION LOSS	SUPPLY PRESS - [PRESS LOSSES + REQ'D PRESS]	13.8	PSIG
ALLOWABLE FRICTION LOSS PER 100 FT	[100 * PRESS AVAILABLE FOR FRICTION LOSS] ÷ [LONGEST DEVELOPED RUN OF PIPE]	9.2	PSIG

WATER PRESSURE CALCULATIONS - UNIT B

PLUMBING SYSTEM	PIPING ELEVATION DIFFERENCE	23	FT
	DEVELOPED RUN OF PIPE FROM WATER METER TO BUILDING FACE	300	FT
	DEVELOPED RUN OF PIPE FROM BUILDING FACE TO FURTHEST FIXTURE	150	FT
	MIN PRESSURE AT MAIN[1] (PER FIREFLOW TEST RECEIVED 06/27/22)	67	PSIG
PRESSURE LOSSES	PIPE LOSSES FROM SITE ROUTING PER 2" CPVC @ 32 GPM (1.0 PSI/100FT)	3	PSIG
	1" WATER METER @ 32 GPM (PER NEPTUNE T-10)	3	PSIG
	1" BACKFLOW PREVENTOR @ 32 GPM (PER FEBCO 860)	12	PSIG
	WATER HEATER LOSSES	5	PSIG
	X" PRV @ 32 GPM (INSTALL PRV IF STREET PRESSURE EXCEEDS 80 PSI)	0	PSIG
	ELEVATION HEAD LOSS	9.9	PSIG
REQUIRED PRESSURE	PRESSURE BALANCE SHOWER CONTROL VALVE	20	PSIG
PRESSURE AVAILABLE FOR FRICTION LOSS	SUPPLY PRESS - [PRESS LOSSES + REQ'D PRESS]	14.1	PSIG
ALLOWABLE FRICTION LOSS PER 100 FT	[100 * PRESS AVAILABLE FOR FRICTION LOSS] ÷ [LONGEST DEVELOPED RUN OF PIPE]	9.4	PSIG

1. CONTRACTOR SHALL VERIFY WATER PRESSURE AT A LOCATION BETWEEN THE POINT OF CONNECTION SHOWN ON THE CIVIL PLANS AND THE ENTRANCE TO THE BUILDING PRIOR TO INSTALLING WATER PIPING. IF THE FIELD MEASURED WATER PRESSURE IS DISCOVERED TO BE LOWER THAN THE PRESSURE INDICATED ABOVE, IMMEDIATELY CONTACT THE PLUMBING ENGINEER ON RECORD. SHOULD THE CONTRACTOR FAIL TO VERIFY WATER PRESSURE PRIOR TO INSTALLING PIPING, ANY CHANGES REQUIRED BY LOW PRESSURE OR VOLUME SHALL BE THE SOLE RESPONSIBILITY OF THE CONTRACTOR. IF THE DOMESTIC SYSTEM IS TO BE COMBINED WITH FIRE SPRINKLERS, REFER TO FIRE SPRINKLER PLANS FOR ANY ADDITIONAL PRESSURE REQUIREMENTS.

PIPE SIZING CHART, PEX

FOR VELOCITY OF 8FPS (CW) AND 5FPS(HW); PRESSURE LOSS PER 100FT IN PSI=8.0

PIPE SIZE	PIPE ID	COLD WATER			HOT WATER	
		TANK FU	VALVE FU	GPM	FU	GPM
1/2"	.475"	1	-	2.21	1	2.4
3/4"	.671"	6	-	5.6	6	5.5
1"	.862"	15	-	11.1	12	9.1
1-1/4"	1.054"	28	-	19.0	19	13.6
1-1/2"	1.244"	54	13	30.3	27	18.9
2"	1.629"	130	50	51.9	58	32.4

BASED ON UPONOR AQUAPEX PRESSURE LOSS TABLES IN CH 4 OF THE PLUMBING DESIGN ASSISTANCE MANUAL

ISSUED DATE: XX/XX/XX

GOUVIS engineering consulting group, inc.®

15 Studebaker
Irvine
CA 92618

Irvine
tel 949.752.1612
fax 949.752.5321

Palm Springs
tel 760.323.5090

LICENSED PROFESSIONAL ENGINEER
LAWRENCE PAUL CAVANAUGH
M 39147
MECHANICAL
STATE OF CALIFORNIA

DATE SIGNED: 2/1/23

RESTRICTIVE NOTICE

THESE DESIGNS, DRAWINGS, AND SPECIFICATIONS ARE THE EXCLUSIVE PROPERTY OF GOUVIS ENGINEERING CONSULTING GROUP. THEY ARE THE SUBJECTOF COPYRIGHT AND OTHER LEGAL PROTECTION. THEY MAY BE USED ONLY BY THEIR INTENDED RECIPIENT AND ONLY FOR THE PROJECT DEPICTED HEREIN. NO PART OF THESE DRAWINGS ARE TO BE COPIED, TRANSFERRED, REPRODUCED, NOR CAN THEY BE USED, IN WHOLE OR IN PART, BY ANY OTHER PERSON OR FOR ANY OTHER PROJECT OR STRUCTURE, WITHOUT THE PRIOR EXPRESS WRITTEN CONSENT OF GOUVIS ENGINEERING CONSULTING GROUP

© 2017 GOUVIS ENGINEERING CONSULTING GROUP INC. - ALL RIGHTS RESERVED

PROJECT:
Tenant Square

DEVELOPER:
Osito Holdings LLC

ARCHITECT:
Gary Moore & Associates

LOCATION:
Morgan Hill
Santa Clara
CA

REVISIONS

NO.	DATE	DESCRIPTION

SHEET NAME:
CALCULATIONS

PROJECT NUMBER:
66074

ENGINEER:

DRAFTER:

SHEET NUMBER:
P-0.3

KEY NOTES

1. REFER TO UNIT FOR CONTINUATION
2. REFER TO CIVIL PLAN FOR CONTINUATION

KEY NOTES - WASTE

2. 2" WASTE PIPE WITH DWV FITTINGS
3. 3" WASTE PIPE WITH DWV FITTINGS
4. 4" WASTE PIPE WITH DWV FITTINGS
6. 6" WASTE PIPE WITH DWV FITTINGS
8. 8" WASTE PIPE WITH DWV FITTINGS

KEY NOTES - VENT

1-1/2. 1-1/2" VENT PIPE WITH DWV FITTINGS
2. 2" VENT PIPE WITH DWV FITTINGS
3. 3" VENT PIPE WITH DWV FITTINGS
4. 4" VENT PIPE WITH DWV FITTINGS

KEY NOTES - WATER

1/2. 1/2" NOMINAL I.D. DOMESTIC WATER PIPE
3/4. 3/4" NOMINAL I.D. DOMESTIC WATER PIPE
1. 1" NOMINAL I.D. DOMESTIC WATER PIPE
1-1/4. 1-1/4" NOMINAL I.D. DOMESTIC WATER PIPE
1-1/2. 1-1/2" NOMINAL I.D. DOMESTIC WATER PIPE
2. 2" NOMINAL I.D. DOMESTIC WATER PIPE
2-1/2. 2-1/2" NOMINAL I.D. DOMESTIC WATER PIPE
3. 3" NOMINAL I.D. DOMESTIC WATER PIPE
4. 4" NOMINAL I.D. DOMESTIC WATER PIPE
5. 5" NOMINAL I.D. DOMESTIC WATER PIPE
6. 6" NOMINAL I.D. DOMESTIC WATER PIPE

SYMBOLS LEGEND

- 90 DEG ELBOW DOWN
- 90 DEG ELBOW UP
- TEE, DOWN
- TEE, UP
- PIPE CAP
- WALL CLEANOUT
- WYE
- GROUND CLEANOUT
- RISER ID TAG (TAG / #)
- EQUIPMENT ID TAG (TAG / #)

- CW — CW
- HW — HW
- HWR — HW_RETURN
- G — GAS_LPG
- MPG — GAS_MPG
- WASTE_BELOW
- WASTE_ABOVE
- VENT
- CD — COND. DRAIN
- GREY_ABOVE
- GREY_BELOW
- GREASE_ABOVE
- GREASE_BELOW

A "BELOW MARKET RATE" UNIT

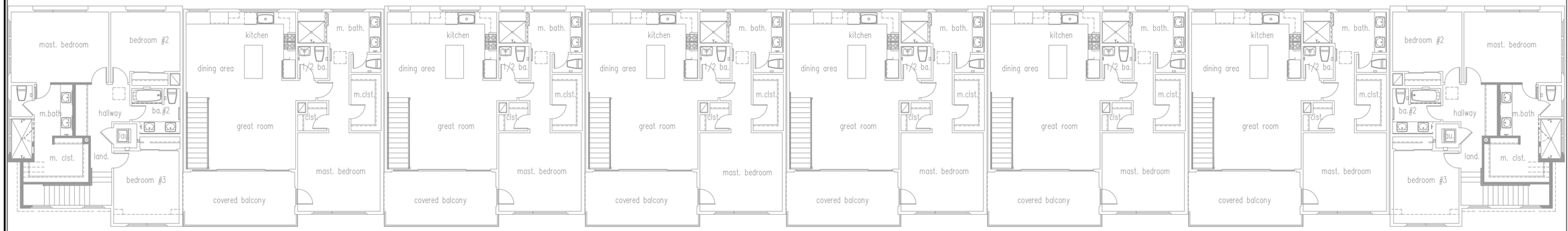

0 4' 8' 16' 24'
1/8" = 1'-0"

SECOND FLOOR PLAN 2

HATCHED UNIT INDICATES
A "BELOW MARKET RATE" UNIT

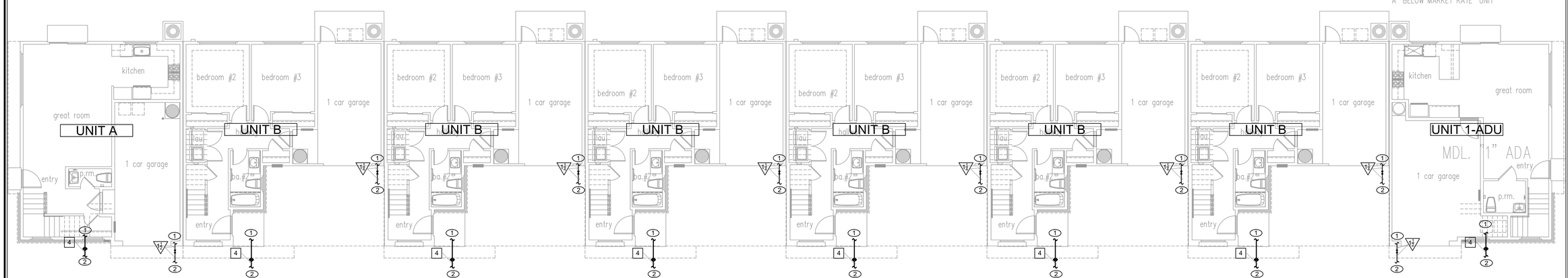

0 4' 8' 16' 24'
1/8" = 1'-0"

FIRST FLOOR PLAN 1

ISSUED DATE: XX/XX/XX

GOUVIS engineering consulting group, inc.®

15 Studebaker
Irvine
CA 92618

Irvine
tel 949.752.1612
fax 949.752.5321

Palm Springs
tel 760.323.5090

LICENSED PROFESSIONAL ENGINEER
LAWRENCE PAUL CAVANAUGH
M 39147
MECHANICAL
STATE OF CALIFORNIA

DATE SIGNED: 2/1/23

RESTRICTIVE NOTICE

THESE DESIGNS, DRAWINGS, AND SPECIFICATIONS ARE THE EXCLUSIVE PROPERTY OF GOUVIS ENGINEERING CONSULTING GROUP. THEY ARE THE SUBJECTOF COPYRIGHT AND OTHER LEGAL PROTECTION. THEY MAY BE USED ONLY BY THEIR INTENDED RECIPIENT AND ONLY FOR THE PROJECT DEPICTED HEREIN. NO PART OF THESE DRAWINGS ARE TO BE COPIED, TRANSFERRED, REPRODUCED, NOR CAN THEY BE USED, IN WHOLE OR IN PART, BY ANY OTHER PERSON OR FOR ANY OTHER PROJECT OR STRUCTURE, WITHOUT THE PRIOR EXPRESS WRITTEN CONSENT OF GOUVIS ENGINEERING CONSULTING GROUP

© 2017 GOUVIS ENGINEERING CONSULTING GROUP INC. - ALL RIGHTS RESERVED

PROJECT:
Tenant Square

DEVELOPER:
Osito Holdings LLC

ARCHITECT:
Gary Moore & Associates

LOCATION:
Morgan Hill
Santa Clara
CA

REVISIONS

NO.	DATE	DESCRIPTION

SHEET NAME:
BUILDING 1
FLOOR PLANS
WATER LATERAL
AND SEWER LATERAL

PROJECT NUMBER:
66074

ENGINEER:

DRAFTER:

SHEET NUMBER:
P-2.1

KEY NOTES

1. REFER TO UNIT FOR CONTINUATION
2. REFER TO CIVIL PLAN FOR CONTINUATION

KEY NOTES - WASTE

2. 2" WASTE PIPE WITH DWV FITTINGS
3. 3" WASTE PIPE WITH DWV FITTINGS
4. 4" WASTE PIPE WITH DWV FITTINGS
6. 6" WASTE PIPE WITH DWV FITTINGS
8. 8" WASTE PIPE WITH DWV FITTINGS

KEY NOTES - VENT

1. 1-1/2" VENT PIPE WITH DWV FITTINGS
2. 2" VENT PIPE WITH DWV FITTINGS
3. 3" VENT PIPE WITH DWV FITTINGS
4. 4" VENT PIPE WITH DWV FITTINGS

KEY NOTES - WATER

1. 1/2" NOMINAL I.D. DOMESTIC WATER PIPE
2. 3/4" NOMINAL I.D. DOMESTIC WATER PIPE
3. 1" NOMINAL I.D. DOMESTIC WATER PIPE
4. 1-1/4" NOMINAL I.D. DOMESTIC WATER PIPE
5. 1-1/2" NOMINAL I.D. DOMESTIC WATER PIPE
6. 2" NOMINAL I.D. DOMESTIC WATER PIPE
7. 2-1/2" NOMINAL I.D. DOMESTIC WATER PIPE
8. 3" NOMINAL I.D. DOMESTIC WATER PIPE
9. 4" NOMINAL I.D. DOMESTIC WATER PIPE
10. 5" NOMINAL I.D. DOMESTIC WATER PIPE
11. 6" NOMINAL I.D. DOMESTIC WATER PIPE

SYMBOLS LEGEND

- 90 DEG ELBOW DOWN
- 90 DEG ELBOW UP
- TEE, DOWN
- TEE, UP
- PIPE CAP
- WALL CLEANOUT
- WYE
- GROUND CLEANOUT
- TAG # — RISER ID TAG
- TAG # — EQUIPMENT ID TAG
- CW
- HW
- HWR — HW_RETURN
- WASTE_BELOW
- WASTE_ABOVE
- VENT
- CD — COND. DRAIN
- GREY_ABOVE
- GREY_BELOW
- GREASE_ABOVE
- GREASE_BELOW

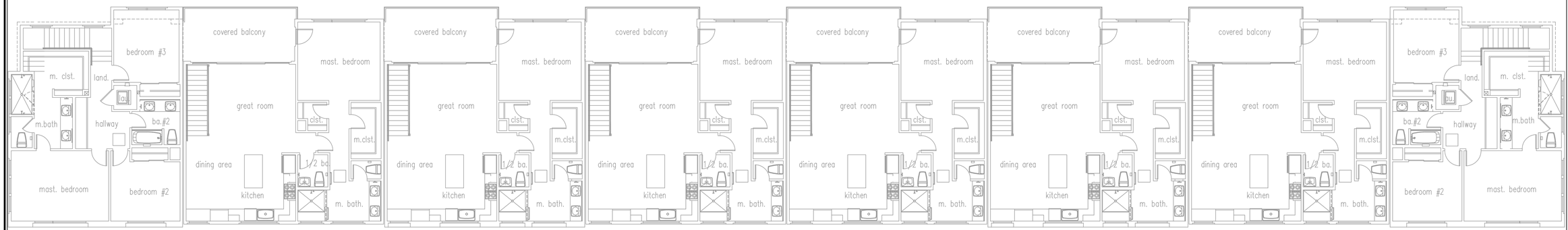

SECOND FLOOR PLAN 2

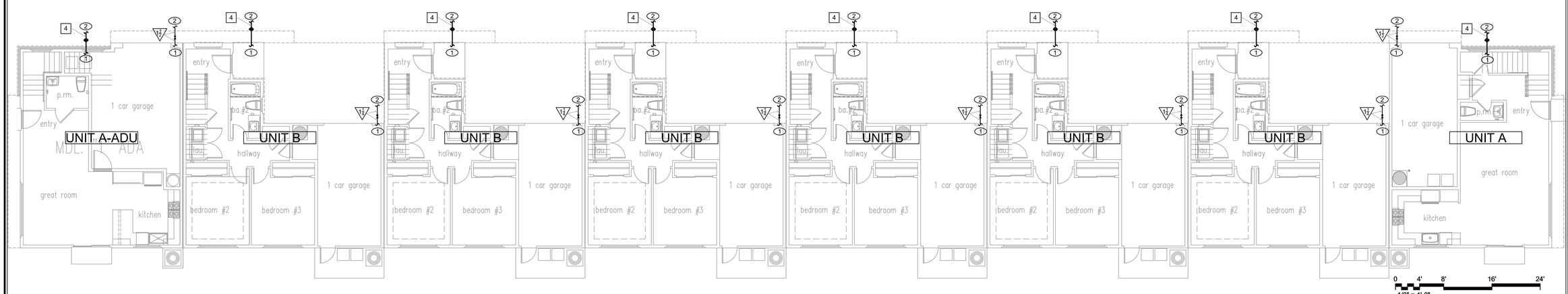

FIRST FLOOR PLAN 1

ISSUED DATE: XX/XX/XX

GOUVIS engineering consulting group, inc.®

15 Studebaker
Irvine
CA 92618

Irvine
tel 949.752.1612
fax 949.752.5321

Palm Springs
tel 760.323.5090

LICENSED PROFESSIONAL ENGINEER
LAWRENCE PAUL CAVANAUGH
M 39147
MECHANICAL
STATE OF CALIFORNIA

DATE SIGNED: 2/1/23

RESTRICTIVE NOTICE

THESE DESIGNS, DRAWINGS, AND SPECIFICATIONS ARE THE EXCLUSIVE PROPERTY OF GOUVIS ENGINEERING CONSULTING GROUP. THEY ARE THE SUBJECTOF COPYRIGHT AND OTHER LEGAL PROTECTION. THEY MAY BE USED ONLY BY THEIR INTENDED RECIPIENT AND ONLY FOR THE PROJECT DEPICTED HEREIN. NO PART OF THESE DRAWINGS ARE TO BE COPIED, TRANSFERRED, REPRODUCED, NOR CAN THEY BE USED, IN WHOLE OR IN PART, BY ANY OTHER PERSON OR FOR ANY OTHER PROJECT OR STRUCTURE, WITHOUT THE PRIOR EXPRESS WRITTEN CONSENT OF GOUVIS ENGINEERING CONSULTING GROUP

© 2017 GOUVIS ENGINEERING CONSULTING GROUP INC. - ALL RIGHTS RESERVED

PROJECT:
Tenant Square

DEVELOPER:
Osito Holdings LLC

ARCHITECT:
Gary Moore & Associates

LOCATION:
Morgan Hill
Santa Clara
CA

REVISIONS

NO.	DATE	DESCRIPTION

SHEET NAME:
BUILDING 2
FLOOR PLANS
WATER LATERAL
AND SEWER LATERAL

PROJECT NUMBER:
66074

ENGINEER:

DRAFTER:

SHEET NUMBER:
P-2.2

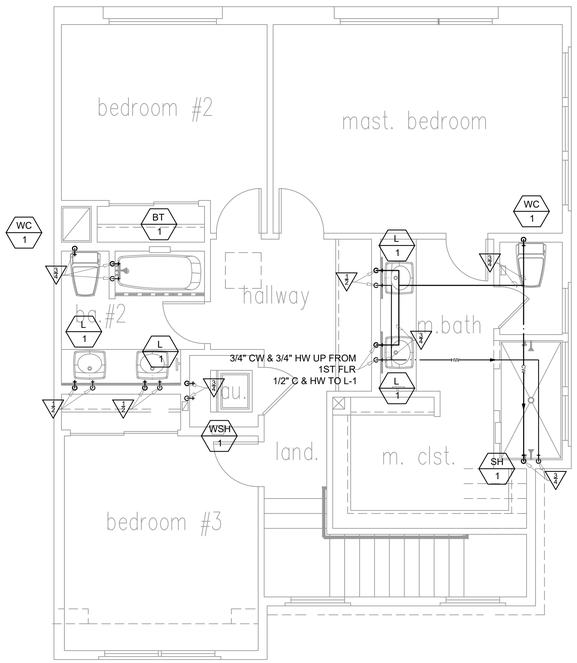

0 2' 4' 8' 12'
1/4" = 1'-0"

SECOND FLOOR PLAN - UNIT A - ADA 4

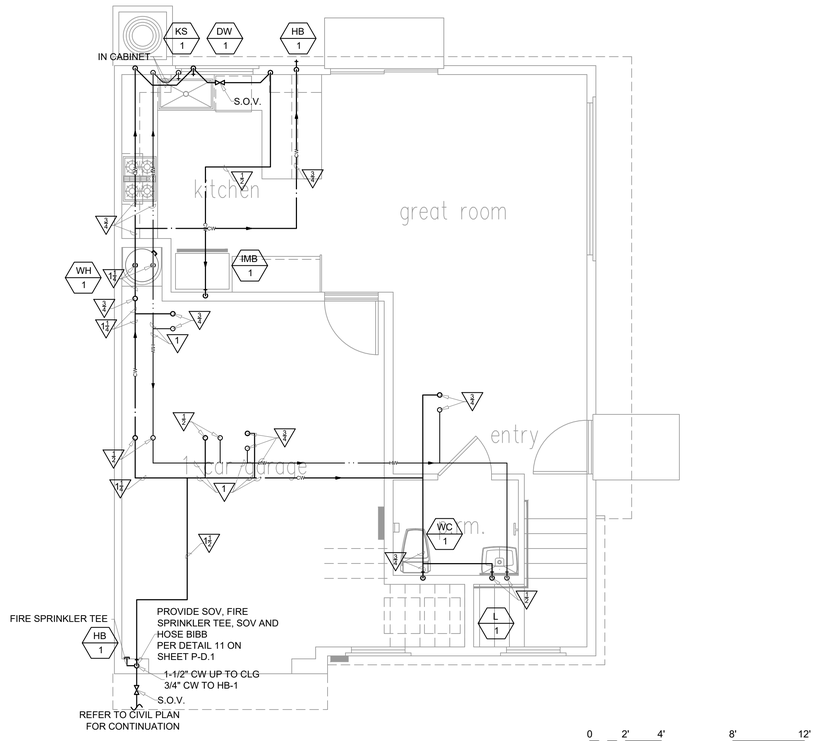

0 2' 4' 8' 12'
1/4" = 1'-0"

FIRST FLOOR PLAN - UNIT A - ADA 3

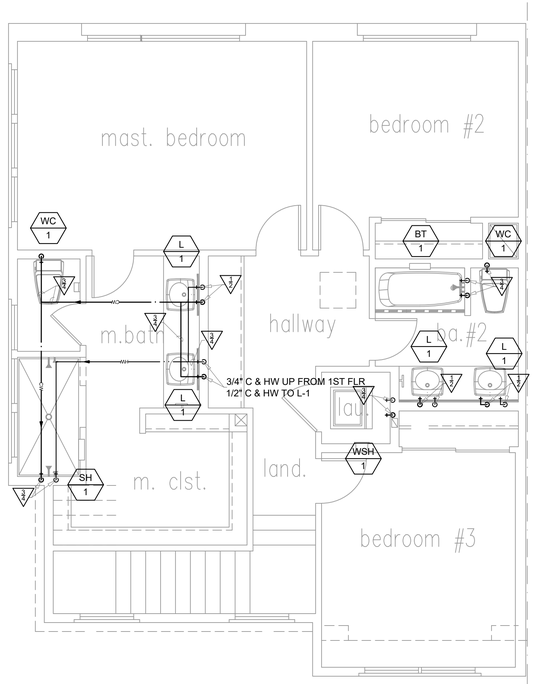

0 2' 4' 8' 12'
1/4" = 1'-0"

SECOND FLOOR PLAN - UNIT A 2

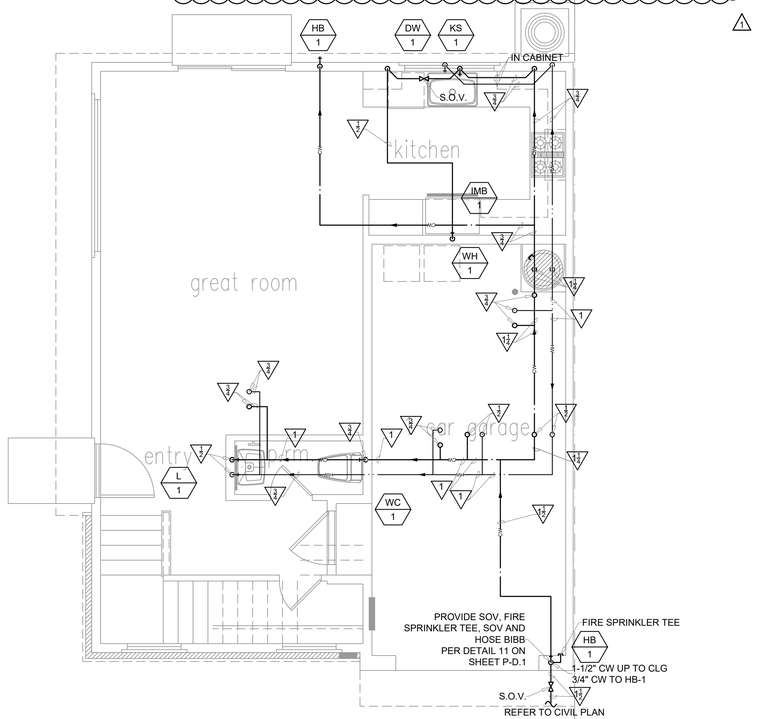

0 2' 4' 8' 12'
1/4" = 1'-0"

FIRST FLOOR PLAN - UNIT A 1

SYMBOLS LEGEND

- 90 DEG ELBOW DOWN
- 90 DEG ELBOW UP
- TEE, DOWN
- TEE, UP
- PIPE CAP
- TAG # — RISER ID TAG
- TAG # — EQUIPMENT ID TAG
- CW
- HW
- HWR — HW_RETURN

KEY NOTES - WATER

- 1/2" NOMINAL I.D. DOMESTIC WATER PIPE
- 3/4" NOMINAL I.D. DOMESTIC WATER PIPE
- 1" NOMINAL I.D. DOMESTIC WATER PIPE
- 1-1/4" NOMINAL I.D. DOMESTIC WATER PIPE
- 1-1/2" NOMINAL I.D. DOMESTIC WATER PIPE
- 2" NOMINAL I.D. DOMESTIC WATER PIPE
- 2-1/2" NOMINAL I.D. DOMESTIC WATER PIPE
- 3" NOMINAL I.D. DOMESTIC WATER PIPE
- 4" NOMINAL I.D. DOMESTIC WATER PIPE
- 5" NOMINAL I.D. DOMESTIC WATER PIPE
- 6" NOMINAL I.D. DOMESTIC WATER PIPE

ISSUED DATE: XX/XX/XX

GOUVIS engineering consulting group, inc.®
15 Studebaker
Irvine
CA 92618

Irvine
tel 949.752.1612
fax 949.752.5321

Palm Springs
tel 760.323.5090

LICENSED PROFESSIONAL ENGINEER — LAWRENCE PAUL CAVANAUGH — M 39147 — MECHANICAL — STATE OF CALIFORNIA

DATE SIGNED: 2/1/23

RESTRICTIVE NOTICE

THESE DESIGNS, DRAWINGS, AND SPECIFICATIONS ARE THE EXCLUSIVE PROPERTY OF GOUVIS ENGINEERING CONSULTING GROUP. THEY ARE THE SUBJECTOF COPYRIGHT AND OTHER LEGAL PROTECTION. THEY MAY BE USED ONLY BY THEIR INTENDED RECIPIENT AND ONLY FOR THE PROJECT DEPICTED HEREIN. NO PART OF THESE DRAWINGS ARE TO BE COPIED, TRANSFERRED, REPRODUCED, NOR CAN THEY BE USED, IN WHOLE OR IN PART, BY ANY OTHER PERSON OR FOR ANY OTHER PROJECT OR STRUCTURE, WITHOUT THE PRIOR EXPRESS WRITTEN CONSENT OF GOUVIS ENGINEERING CONSULTING GROUP

© 2017 GOUVIS ENGINEERING CONSULTING GROUP INC. - ALL RIGHTS RESERVED

PROJECT:
Tenant Square

DEVELOPER:
Osito Holdings LLC

ARCHITECT:
Gary Moore & Associates

LOCATION:
Morgan Hill
Santa Clara
CA

REVISIONS

NO.	DATE	DESCRIPTION

SHEET NAME:
UNIT A
FLOOR PLANS
COLD / HOT WATER

PROJECT NUMBER:
66074

ENGINEER:

DRAFTER:

SHEET NUMBER:
P-3.1A

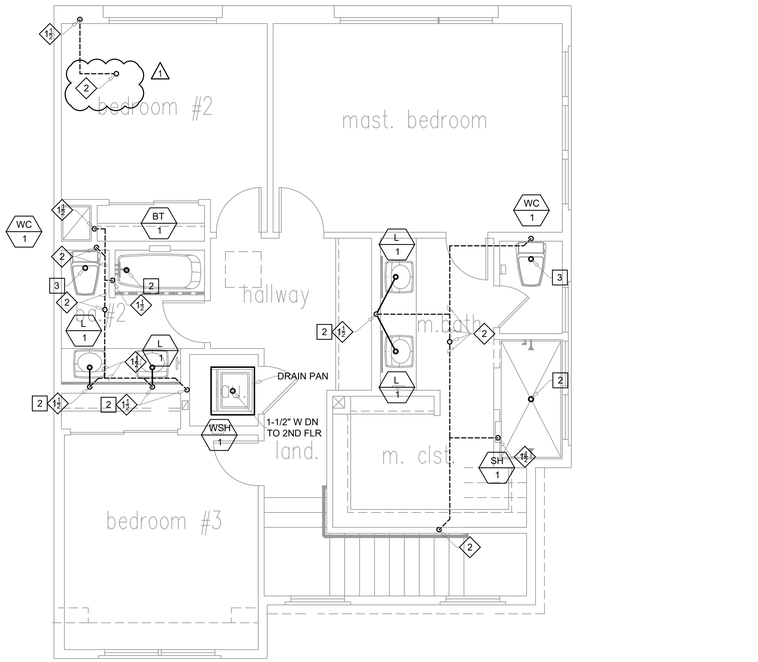

0 2' 4' 8' 12'
1/4" = 1'-0"

SECOND FLOOR PLAN - UNIT A - ADA 4

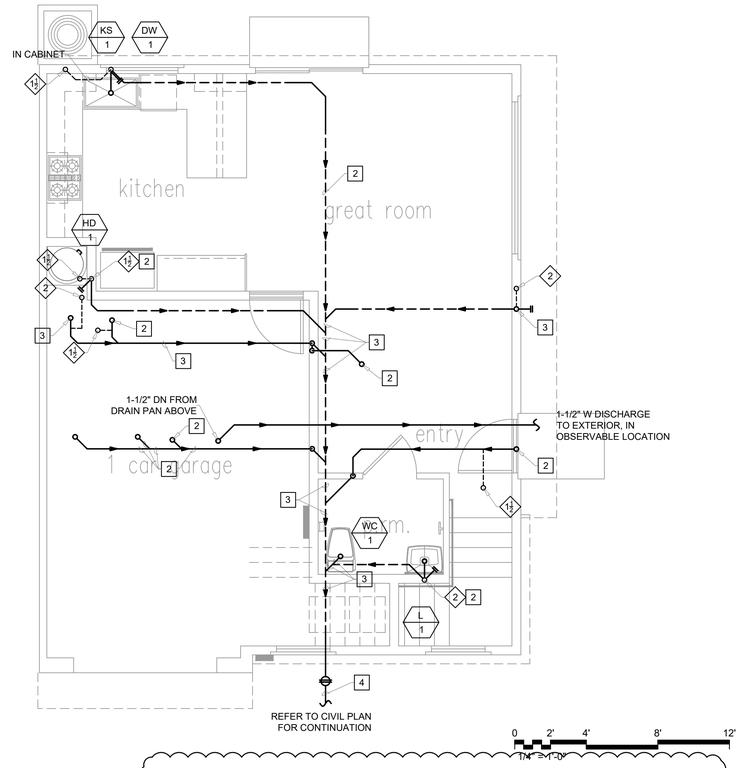

0 2' 4' 8' 12'
1/4" = 1'-0"

FIRST FLOOR PLAN - UNIT A - ADA 3

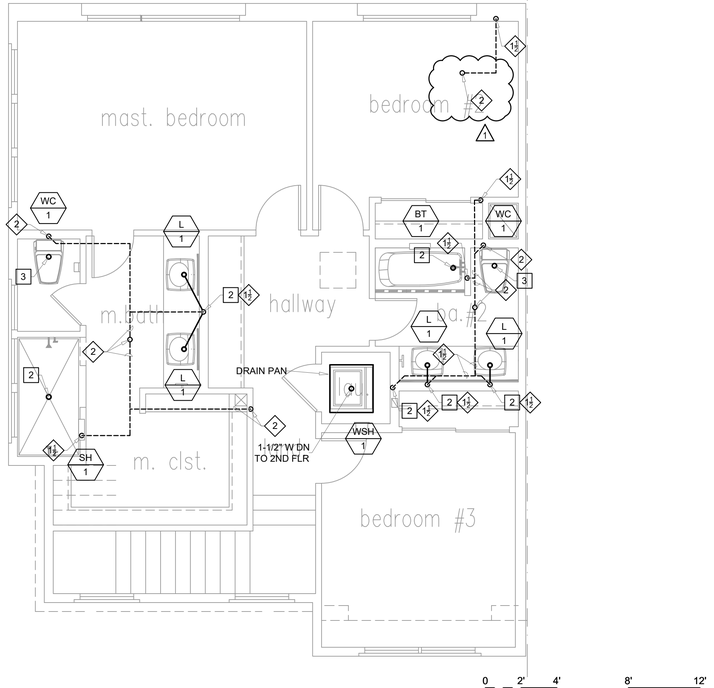

0 2' 4' 8' 12'
1/4" = 1'-0"

SECOND FLOOR PLAN - UNIT A 2

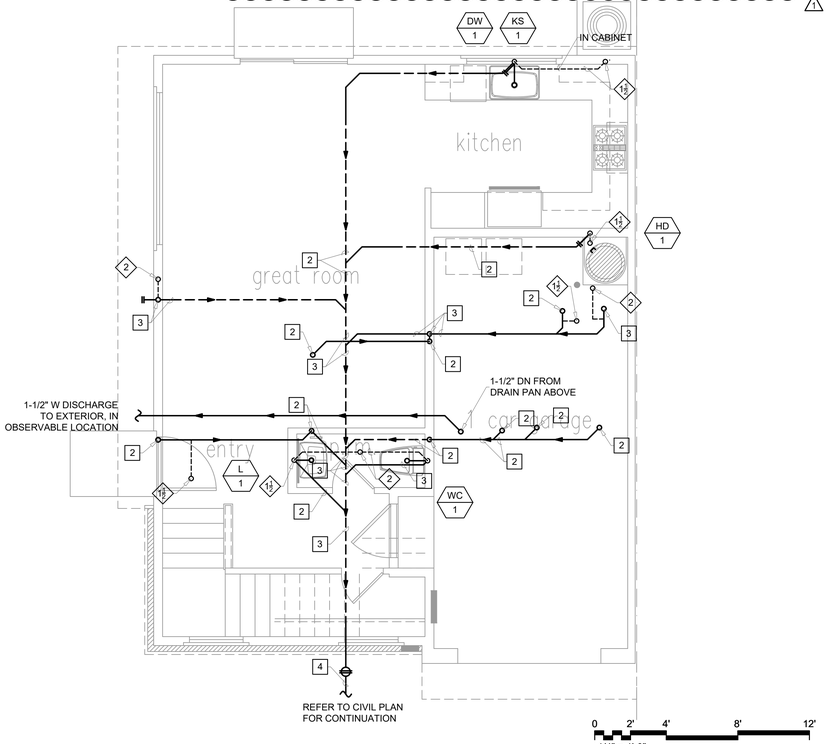

0 2' 4' 8' 12'
1/4" = 1'-0"

FIRST FLOOR PLAN - UNIT A 1

SYMBOLS LEGEND

- 90 DEG ELBOW DOWN
- 90 DEG ELBOW UP
- TEE, DOWN
- TEE, UP
- PIPE CAP
- WALL CLEANOUT
- WYE
- GROUND CLEANOUT
- RISER ID TAG
- EQUIPMENT ID TAG
- WASTE_BELOW
- WASTE_ABOVE
- VENT
- COND. DRAIN
- GREY_ABOVE
- GREY_BELOW
- GREASE_ABOVE
- GREASE_BELOW

KEY NOTES - WASTE

2	2" WASTE PIPE WITH DWV FITTINGS
3	3" WASTE PIPE WITH DWV FITTINGS
4	4" WASTE PIPE WITH DWV FITTINGS
6	6" WASTE PIPE WITH DWV FITTINGS
8	8" WASTE PIPE WITH DWV FITTINGS

KEY NOTES - VENT

1½	1-1/2" VENT PIPE WITH DWV FITTINGS
2	2" VENT PIPE WITH DWV FITTINGS
3	3" VENT PIPE WITH DWV FITTINGS
4	4" VENT PIPE WITH DWV FITTINGS

ISSUED DATE: XX/XX/XX

GOUVIS engineering consulting group, inc.®
15 Studebaker
Irvine
CA 92618

Irvine
tel 949.752.1612
fax 949.752.5321

Palm Springs
tel 760.323.5090

LICENSED PROFESSIONAL ENGINEER
LAWRENCE PAUL CAVANAUGH
M 39147
MECHANICAL
STATE OF CALIFORNIA

DATE SIGNED: 2/1/23

RESTRICTIVE NOTICE

THESE DESIGNS, DRAWINGS, AND SPECIFICATIONS ARE THE EXCLUSIVE PROPERTY OF GOUVIS ENGINEERING CONSULTING GROUP. THEY ARE THE SUBJECTOF COPYRIGHT AND OTHER LEGAL PROTECTION. THEY MAY BE USED ONLY BY THEIR INTENDED RECIPIENT AND ONLY FOR THE PROJECT DEPICTED HEREIN. NO PART OF THESE DRAWINGS ARE TO BE COPIED, TRANSFERRED, REPRODUCED, NOR CAN THEY BE USED, IN WHOLE OR IN PART, BY ANY OTHER PERSON OR FOR ANY OTHER PROJECT OR STRUCTURE, WITHOUT THE PRIOR EXPRESS WRITTEN CONSENT OF GOUVIS ENGINEERING CONSULTING GROUP

© 2017 GOUVIS ENGINEERING CONSULTING GROUP INC. - ALL RIGHTS RESERVED

PROJECT:
Tenant Square

DEVELOPER:
Osito Holdings LLC

ARCHITECT:
Gary Moore & Associates

LOCATION:
Morgan Hill
Santa Clara
CA

REVISIONS

NO.	DATE	DESCRIPTION

SHEET NAME:
UNIT A
FLOOR PLANS
WASTE / VENT PIPING
AND FC CONDENSATE

PROJECT NUMBER:
66074

ENGINEER:

DRAFTER:

SHEET NUMBER:
P-3.1B

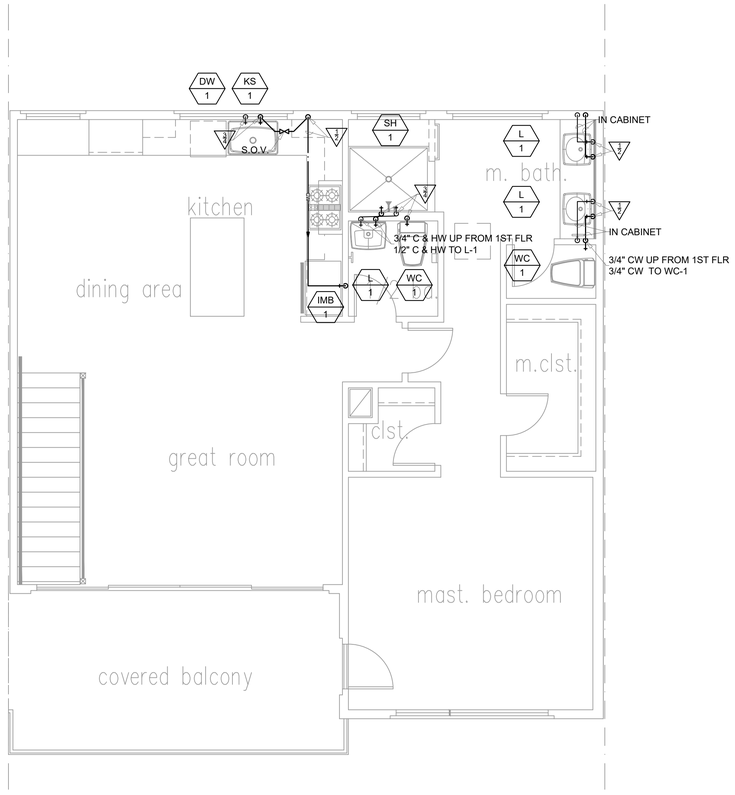

0 2' 4' 8' 12'
1/4" = 1'-0"

SECOND FLOOR PLAN - UNIT B 2

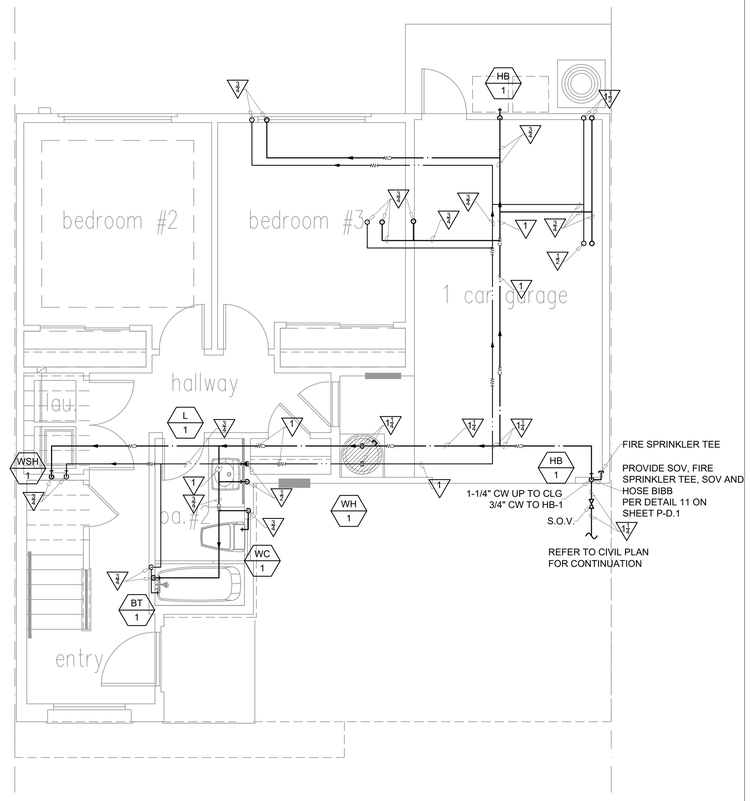

0 2' 4' 8' 12'
1/4" = 1'-0"

FIRST FLOOR PLAN - UNIT B 1

SYMBOLS LEGEND

- 90 DEG ELBOW DOWN
- 90 DEG ELBOW UP
- TEE, DOWN
- TEE, UP
- PIPE CAP
- TAG / # — RISER ID TAG
- TAG / # — EQUIPMENT ID TAG
- CW
- HW
- HWR — HW_RETURN

KEY NOTES - WATER

- 1/2" NOMINAL I.D. DOMESTIC WATER PIPE
- 3/4" NOMINAL I.D. DOMESTIC WATER PIPE
- 1" NOMINAL I.D. DOMESTIC WATER PIPE
- 1-1/4" NOMINAL I.D. DOMESTIC WATER PIPE
- 1-1/2" NOMINAL I.D. DOMESTIC WATER PIPE
- 2" NOMINAL I.D. DOMESTIC WATER PIPE
- 2-1/2" NOMINAL I.D. DOMESTIC WATER PIPE
- 3" NOMINAL I.D. DOMESTIC WATER PIPE
- 4" NOMINAL I.D. DOMESTIC WATER PIPE
- 5" NOMINAL I.D. DOMESTIC WATER PIPE
- 6" NOMINAL I.D. DOMESTIC WATER PIPE

GOUVIS engineering consulting group, inc.

15 Studebaker
Irvine
CA 92618

Irvine
tel 949.752.1612
fax 949.752.5321

Palm Springs
tel 760.323.5090

LICENSED PROFESSIONAL ENGINEER
LAWRENCE PAUL CAVANAUGH
M 39147
MECHANICAL
STATE OF CALIFORNIA

DATE SIGNED: 2/1/23

RESTRICTIVE NOTICE

THESE DESIGNS, DRAWINGS, AND SPECIFICATIONS ARE THE EXCLUSIVE PROPERTY OF GOUVIS ENGINEERING CONSULTING GROUP. THEY ARE THE SUBJECTOF COPYRIGHT AND OTHER LEGAL PROTECTION. THEY MAY BE USED ONLY BY THEIR INTENDED RECIPIENT AND ONLY FOR THE PROJECT DEPICTED HEREIN. NO PART OF THESE DRAWINGS ARE TO BE COPIED, TRANSFERRED, REPRODUCED, NOR CAN THEY BE USED, IN WHOLE OR IN PART, BY ANY OTHER PERSON OR FOR ANY OTHER PROJECT OR STRUCTURE, WITHOUT THE PRIOR EXPRESS WRITTEN CONSENT OF GOUVIS ENGINEERING CONSULTING GROUP

© 2017 GOUVIS ENGINEERING CONSULTING GROUP INC. - ALL RIGHTS RESERVED

PROJECT:
Tenant Square

DEVELOPER:
Osito Holdings LLC

ARCHITECT:
Gary Moore & Associates

LOCATION:
Morgan Hill
Santa Clara
CA

REVISIONS

NO.	DATE	DESCRIPTION

SHEET NAME:
UNIT B
FLOOR PLANS
COLD / HOT WATER

PROJECT NUMBER:
66074

ENGINEER:

DRAFTER:

SHEET NUMBER:
P-3.2A

ISSUED DATE:XX/XX/XX

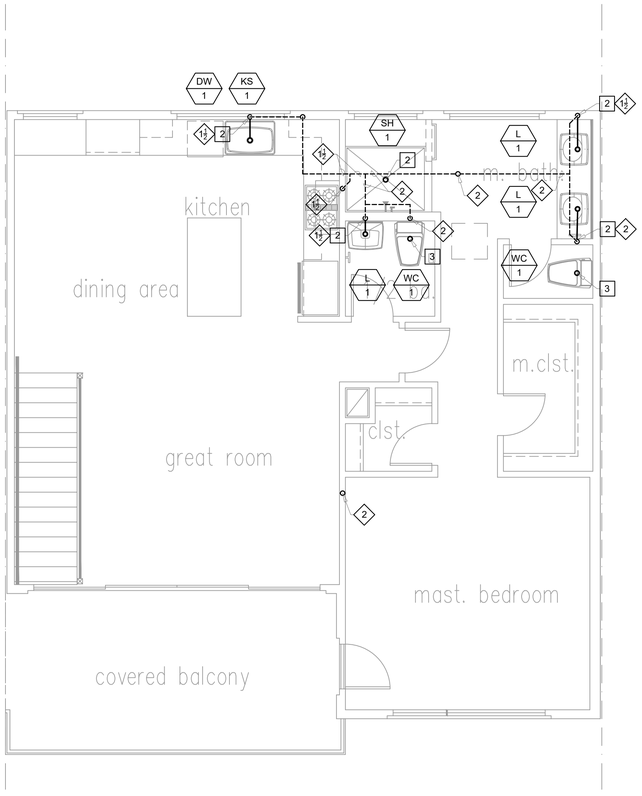

0 2' 4' 8' 12'
1/4" = 1'-0"

SECOND FLOOR PLAN - UNIT B 2

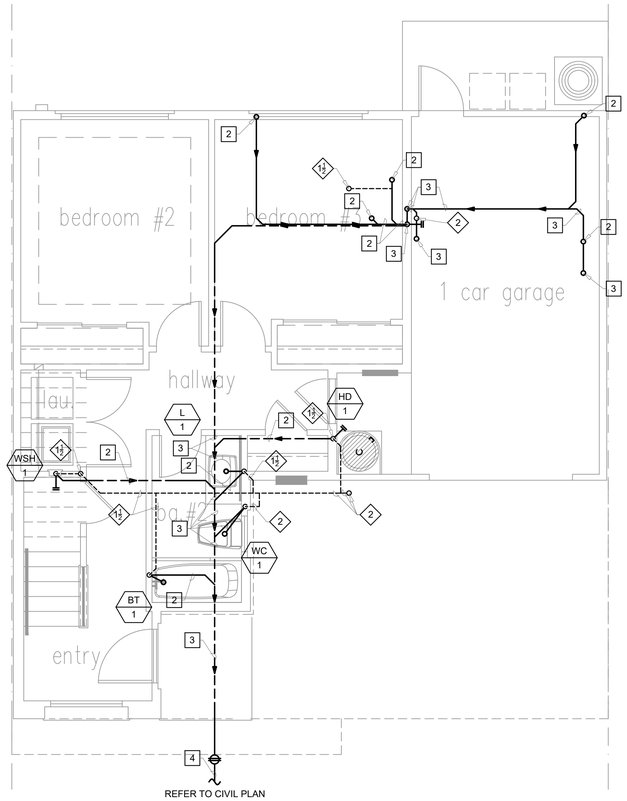

0 2' 4' 8' 12'
1/4" = 1'-0"

FIRST FLOOR PLAN - UNIT B 1

SYMBOLS LEGEND

- 90 DEG ELBOW DOWN
- 90 DEG ELBOW UP
- TEE, DOWN
- TEE, UP
- PIPE CAP
- WALL CLEANOUT
- WYE
- GROUND CLEANOUT
- RISER ID TAG
- EQUIPMENT ID TAG
- WASTE_BELOW
- WASTE_ABOVE
- VENT
- COND. DRAIN
- GREY_ABOVE
- GREY_BELOW
- GREASE_ABOVE
- GREASE_BELOW

KEY NOTES - WASTE

- 2 — 2" WASTE PIPE WITH DWV FITTINGS
- 3 — 3" WASTE PIPE WITH DWV FITTINGS
- 4 — 4" WASTE PIPE WITH DWV FITTINGS
- 6 — 6" WASTE PIPE WITH DWV FITTINGS
- 8 — 8" WASTE PIPE WITH DWV FITTINGS

KEY NOTES - VENT

- 1½ — 1-1/2" VENT PIPE WITH DWV FITTINGS
- 2 — 2" VENT PIPE WITH DWV FITTINGS
- 3 — 3" VENT PIPE WITH DWV FITTINGS
- 4 — 4" VENT PIPE WITH DWV FITTINGS

GOUVIS engineering consulting group, inc.®
15 Studebaker
Irvine
CA 92618

Irvine
tel 949.752.1612
fax 949.752.5321

Palm Springs
tel 760.323.5090

LICENSED PROFESSIONAL ENGINEER
LAWRENCE PAUL CAVANAUGH
M 39147
MECHANICAL
STATE OF CALIFORNIA

DATE SIGNED: 2/1/23

RESTRICTIVE NOTICE

THESE DESIGNS, DRAWINGS, AND SPECIFICATIONS ARE THE EXCLUSIVE PROPERTY OF GOUVIS ENGINEERING CONSULTING GROUP. THEY ARE THE SUBJECTOF COPYRIGHT AND OTHER LEGAL PROTECTION. THEY MAY BE USED ONLY BY THEIR INTENDED RECIPIENT AND ONLY FOR THE PROJECT DEPICTED HEREIN. NO PART OF THESE DRAWINGS ARE TO BE COPIED, TRANSFERRED, REPRODUCED, NOR CAN THEY BE USED, IN WHOLE OR IN PART, BY ANY OTHER PERSON OR FOR ANY OTHER PROJECT OR STRUCTURE, WITHOUT THE PRIOR EXPRESS WRITTEN CONSENT OF GOUVIS ENGINEERING CONSULTING GROUP

© 2017 GOUVIS ENGINEERING CONSULTING GROUP INC. - ALL RIGHTS RESERVED

PROJECT:
Tenant Square

DEVELOPER:
Osito Holdings LLC

ARCHITECT:
Gary Moore & Associates

LOCATION:
Morgan Hill
Santa Clara
CA

REVISIONS

NO.	DATE	DESCRIPTION

SHEET NAME:
UNIT B
FLOOR PLANS
WASTE / VENT PIPING
AND FC CONDENSATE

PROJECT NUMBER:
66074

ENGINEER:

DRAFTER:

SHEET NUMBER:
P-3.2B

ISSUED DATE: XX/XX/XX

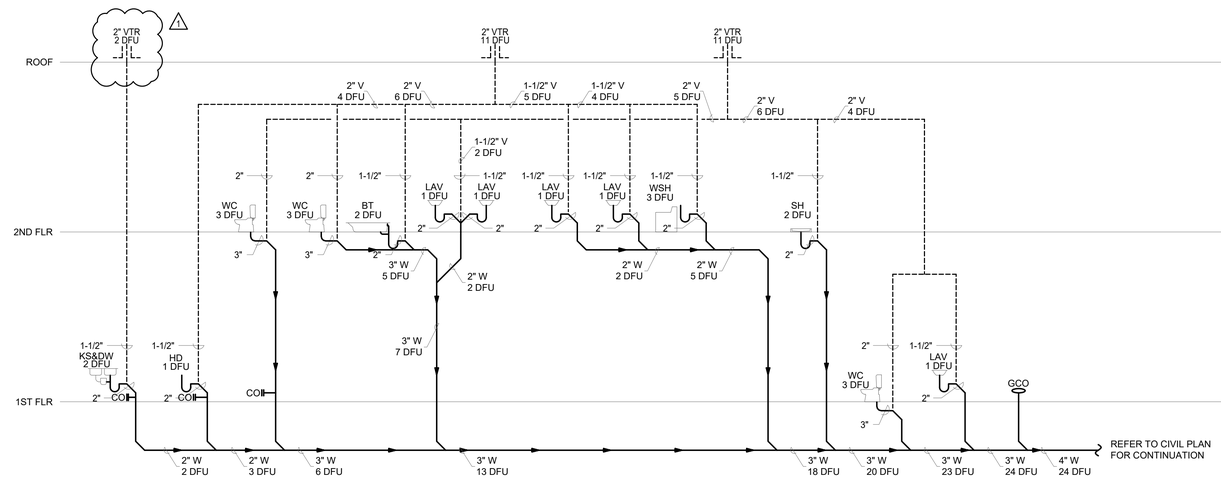

WASTE DIAGRAM | 2

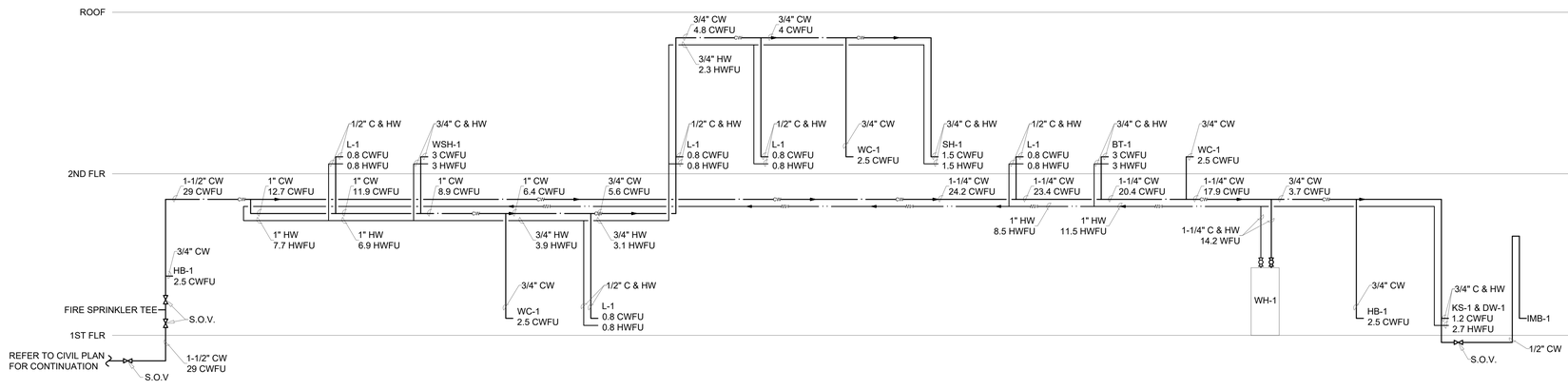

WATER DIAGRAM | 1

ISSUED DATE: XX/XX/XX

GOUVIS engineering consulting group, inc.®

15 Studebaker
Irvine
CA 92618

Irvine
tel 949.752.1612
fax 949.752.5321

Palm Springs
tel 760.323.5090

LICENSED PROFESSIONAL ENGINEER
LAWRENCE PAUL CAVANAUGH
M 39147
MECHANICAL
STATE OF CALIFORNIA

DATE SIGNED: 2/1/23

RESTRICTIVE NOTICE

THESE DESIGNS, DRAWINGS, AND SPECIFICATIONS ARE THE EXCLUSIVE PROPERTY OF GOUVIS ENGINEERING CONSULTING GROUP. THEY ARE THE SUBJECTOF COPYRIGHT AND OTHER LEGAL PROTECTION. THEY MAY BE USED ONLY BY THEIR INTENDED RECIPIENT AND ONLY FOR THE PROJECT DEPICTED HEREIN. NO PART OF THESE DRAWINGS ARE TO BE COPIED, TRANSFERRED, REPRODUCED, NOR CAN THEY BE USED, IN WHOLE OR IN PART, BY ANY OTHER PERSON OR FOR ANY OTHER PROJECT OR STRUCTURE, WITHOUT THE PRIOR EXPRESS WRITTEN CONSENT OF GOUVIS ENGINEERING CONSULTING GROUP

© 2017 GOUVIS ENGINEERING CONSULTING GROUP INC. - ALL RIGHTS RESERVED

PROJECT:
Tenant Square

DEVELOPER:
Osito Holdings LLC

ARCHITECT:
Gary Moore & Associates

LOCATION:
Morgan Hill
Santa Clara
CA

REVISIONS

NO.	DATE	DESCRIPTION

SHEET NAME:
DIAGRAMS - UNIT A

PROJECT NUMBER:
66074

ENGINEER:

DRAFTER:

SHEET NUMBER:
P-4.1

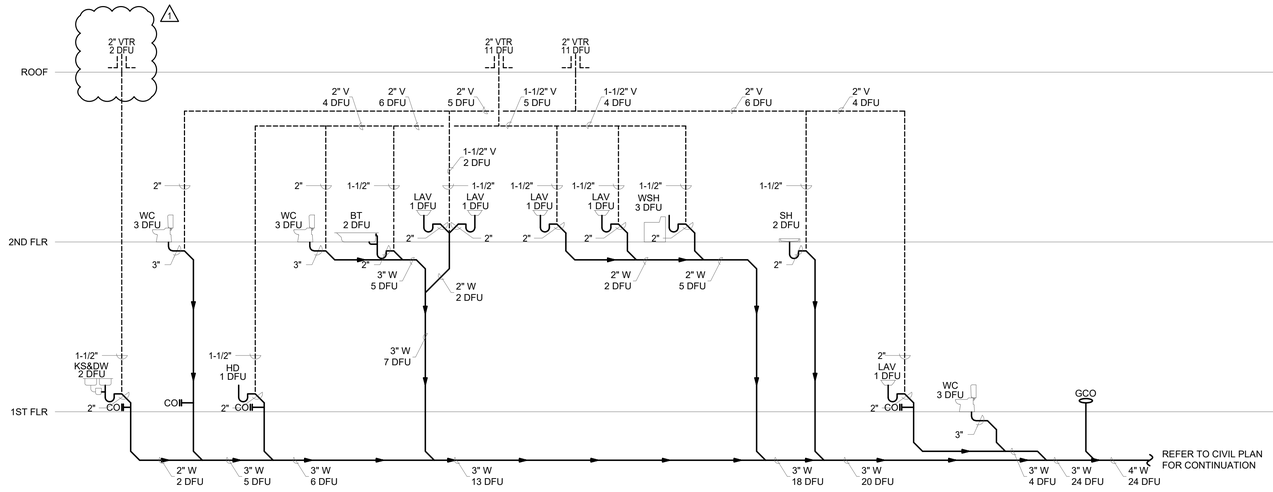

WASTE DIAGRAM | 2

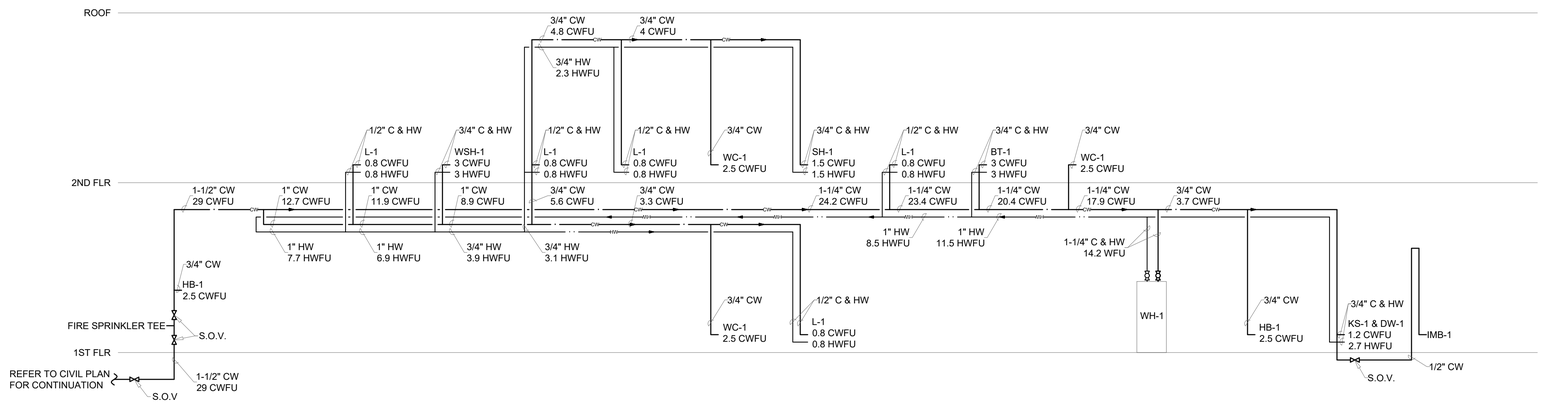

WATER DIAGRAM | 1

ISSUED DATE: XX/XX/XX

GOUVIS engineering consulting group, inc.

15 Studebaker
Irvine
CA 92618

Irvine
tel 949.752.1612
fax 949.752.5321

Palm Springs
tel 760.323.5090

LICENSED PROFESSIONAL ENGINEER
LAWRENCE PAUL CAVANAUGH
M 39147
MECHANICAL
STATE OF CALIFORNIA

DATE SIGNED: 2/1/23

RESTRICTIVE NOTICE

THESE DESIGNS, DRAWINGS, AND SPECIFICATIONS ARE THE EXCLUSIVE PROPERTY OF GOUVIS ENGINEERING CONSULTING GROUP. THEY ARE THE SUBJECTOF COPYRIGHT AND OTHER LEGAL PROTECTION. THEY MAY BE USED ONLY BY THEIR INTENDED RECIPIENT AND ONLY FOR THE PROJECT DEPICTED HEREIN. NO PART OF THESE DRAWINGS ARE TO BE COPIED, TRANSFERRED, REPRODUCED, NOR CAN THEY BE USED, IN WHOLE OR IN PART, BY ANY OTHER PERSON OR FOR ANY OTHER PROJECT OR STRUCTURE, WITHOUT THE PRIOR EXPRESS WRITTEN CONSENT OF GOUVIS ENGINEERING CONSULTING GROUP

© 2017 GOUVIS ENGINEERING CONSULTING GROUP INC. - ALL RIGHTS RESERVED

PROJECT:
Tenant Square

DEVELOPER:
Osito Holdings LLC

ARCHITECT:
Gary Moore & Associates

LOCATION:
Morgan Hill
Santa Clara
CA

REVISIONS

NO.	DATE	DESCRIPTION

SHEET NAME:
DIAGRAMS - UNIT A - ADU

PROJECT NUMBER:
66074

ENGINEER:

DRAFTER:

SHEET NUMBER:
P-4.2

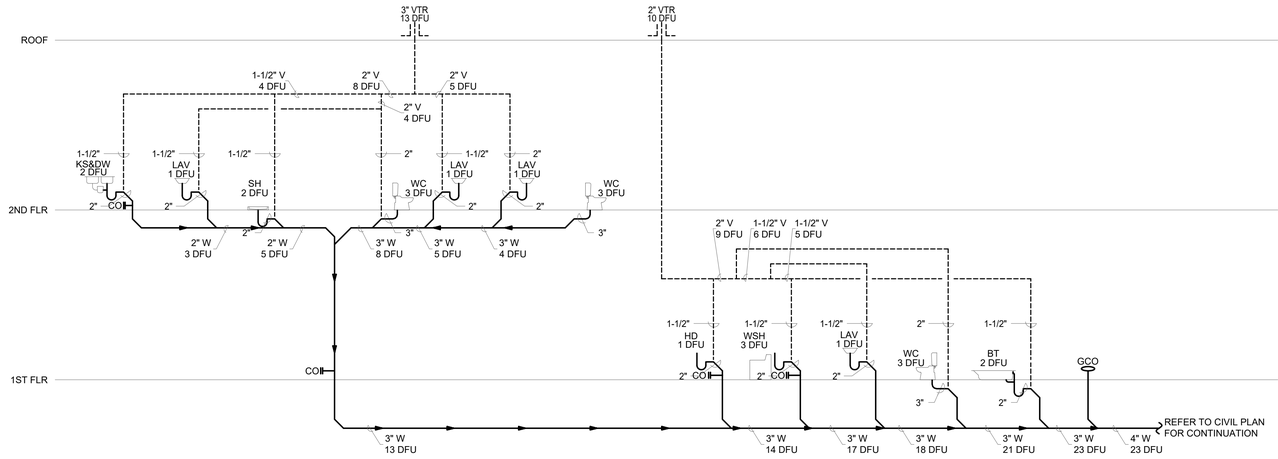

WASTE DIAGRAM 2

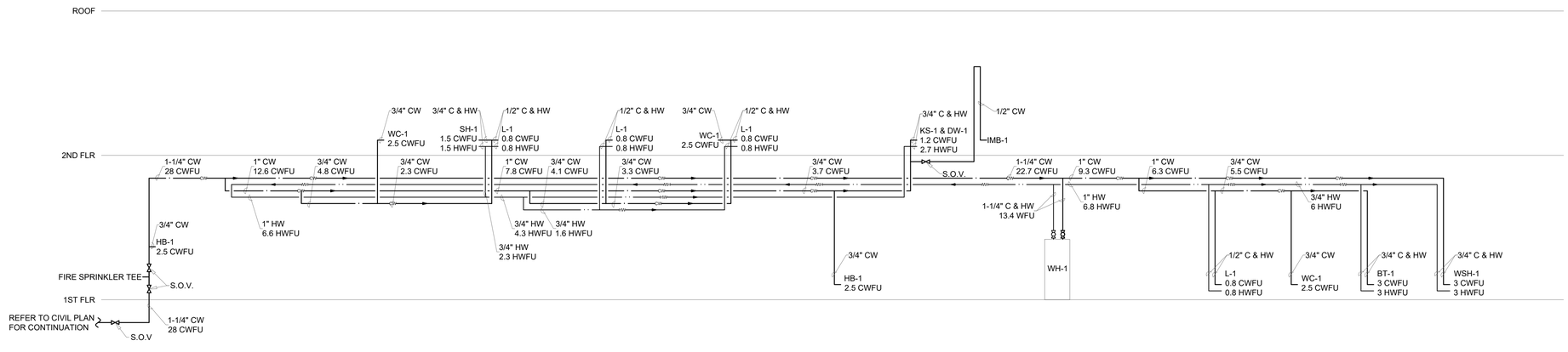

WATER DIAGRAM 1

ISSUED DATE: XX/XX/XX

GOUVIS engineering consulting group, inc.®

15 Studebaker
Irvine
CA 92618

Irvine
tel 949.752.1612
fax 949.752.5321

Palm Springs
tel 760.323.5090

LICENSED PROFESSIONAL ENGINEER
LAWRENCE PAUL CAVANAUGH
M 39147
MECHANICAL
STATE OF CALIFORNIA

DATE SIGNED: 2/1/23

RESTRICTIVE NOTICE

THESE DESIGNS, DRAWINGS, AND SPECIFICATIONS ARE THE EXCLUSIVE PROPERTY OF GOUVIS ENGINEERING CONSULTING GROUP. THEY ARE THE SUBJECTOF COPYRIGHT AND OTHER LEGAL PROTECTION. THEY MAY BE USED ONLY BY THEIR INTENDED RECIPIENT AND ONLY FOR THE PROJECT DEPICTED HEREIN. NO PART OF THESE DRAWINGS ARE TO BE COPIED, TRANSFERRED, REPRODUCED, NOR CAN THEY BE USED, IN WHOLE OR IN PART, BY ANY OTHER PERSON OR FOR ANY OTHER PROJECT OR STRUCTURE, WITHOUT THE PRIOR EXPRESS WRITTEN CONSENT OF GOUVIS ENGINEERING CONSULTING GROUP

© 2017 GOUVIS ENGINEERING CONSULTING GROUP INC. - ALL RIGHTS RESERVED

PROJECT:
Tenant Square

DEVELOPER:
Osito Holdings LLC

ARCHITECT:
Gary Moore & Associates

LOCATION:
Morgan Hill
Santa Clara
CA

REVISIONS

NO.	DATE	DESCRIPTION

SHEET NAME:
DIAGRAMS - UNIT B

PROJECT NUMBER:
66074

ENGINEER:

DRAFTER:

SHEET NUMBER:
P-4.3

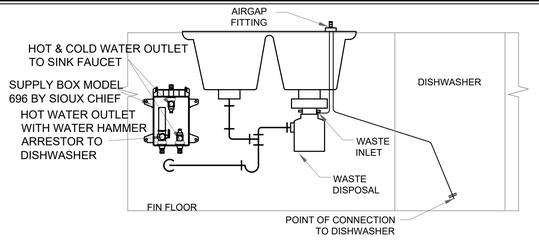

KITCHEN SINK & DISHWASHER | 9

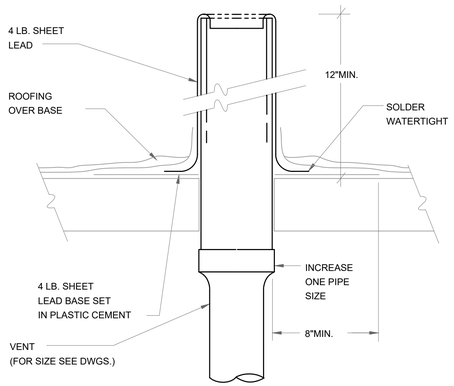

VENT THRU ROOF | 10

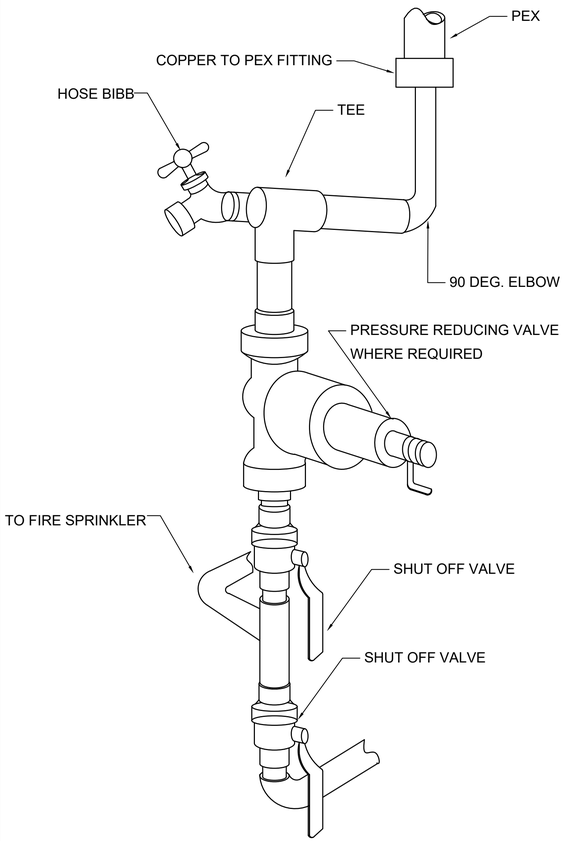

HOSE BIBB W/SPRINKLER TEE | 11

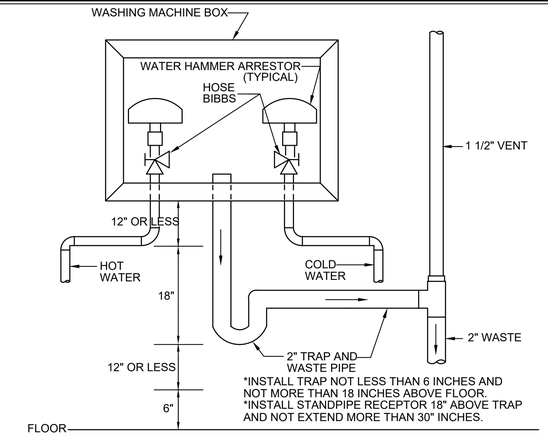

CLOTHES WASHING MACHINE OUTLET BOX | 6

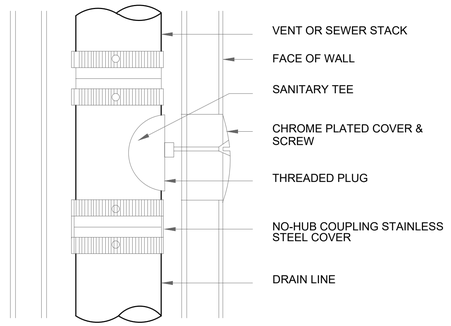

WALL CLEAN OUT (WCO) | 2

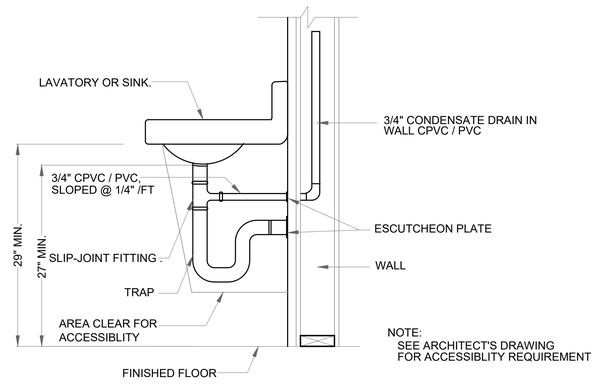

CONDENSATE DRAIN TO LAVATORY TAILPIECE | 1

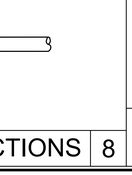

INDIRECT WASTE RECEPTOR | 7

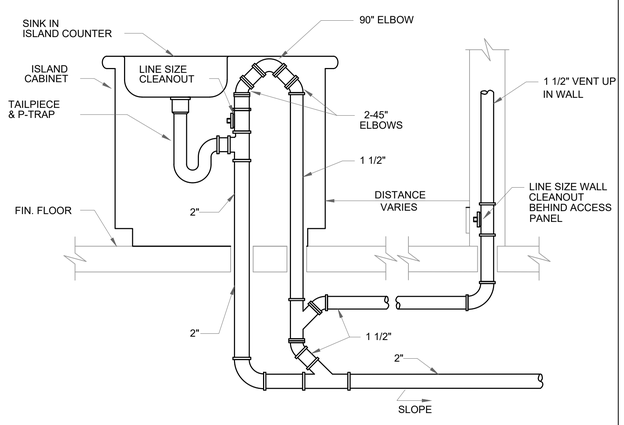

ISLAND SINK WASTE & VENT CONNECTIONS | 8

NOTES:

1. PROVIDE SEISMIC STRAPS PER 2019 CPC REQUIREMENTS.
2. STRAP WATER HEATERS AT POINTS WITHIN THE UPPER 1/3 AND LOWER 1/3 OF ITS VERTICAL DIMENSION. THE LOWER STRAP SHALL BE A MINIMUM 4" ABOVE CONTROLS PER 2019 CPC SECTION 507.2.

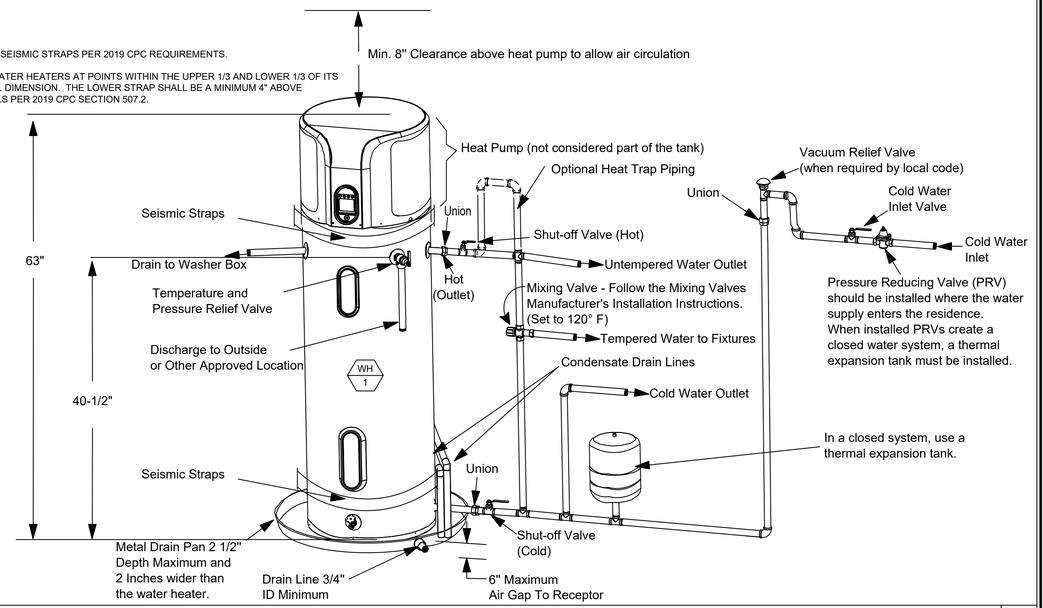

ELECTRIC WATER HEATER DETAIL | 3

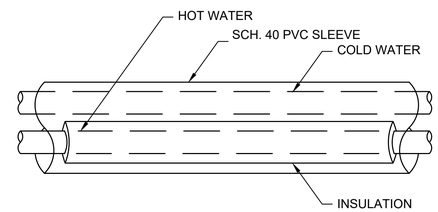

NOTE:*WHEN PEX TUBING IS PLACED IN SOIL AND IS USED IN POTABLE WATER SYSTEM INTENDED TO SUPPLY DRINKING WATER TO FIXTURES OR APPLIANCES, AND TUBING OR PIPING SHALL BE SLEEVED WITH MATERIAL APPROVED FOR POTABLE WATER USE IN SOIL OR OTHER MATERIAL THAT IS IMPERMEABLE TO SOLVENTS OR PETROLEUM PRODUCTS. CPC TABLE 604.1 NOTE 2.

TYPICAL BELOW GRADE PIPE PROTECTION | 5

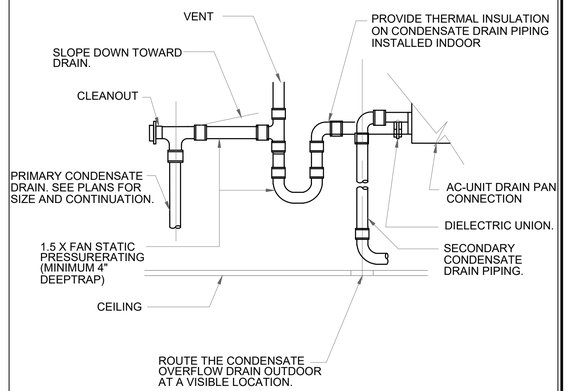

CONDENSATE DRAIN | 4

ISSUED DATE: XX/XX/XX

GOUVIS engineering consulting group, inc.®
15 Studebaker
Irvine
CA 92618

Irvine
tel 949.752.1612
fax 949.752.5321

Palm Springs
tel 760.323.5090

LICENSED PROFESSIONAL ENGINEER LAWRENCE PAUL CAVANAUGH M 39147 MECHANICAL STATE OF CALIFORNIA

DATE SIGNED: 2/1/23

RESTRICTIVE NOTICE

THESE DESIGNS, DRAWINGS, AND SPECIFICATIONS ARE THE EXCLUSIVE PROPERTY OF GOUVIS ENGINEERING CONSULTING GROUP. THEY ARE THE SUBJECTOF COPYRIGHT AND OTHER LEGAL PROTECTION. THEY MAY BE USED ONLY BY THEIR INTENDED RECIPIENT AND ONLY FOR THE PROJECT DEPICTED HEREIN. NO PART OF THESE DRAWINGS ARE TO BE COPIED, TRANSFERRED, REPRODUCED, NOR CAN THEY BE USED, IN WHOLE OR IN PART, BY ANY OTHER PERSON OR FOR ANY OTHER PROJECT OR STRUCTURE, WITHOUT THE PRIOR EXPRESS WRITTEN CONSENT OF GOUVIS ENGINEERING CONSULTING GROUP

© 2017 GOUVIS ENGINEERING CONSULTING GROUP INC. - ALL RIGHTS RESERVED

PROJECT:
Tenant Square

DEVELOPER:
Osito Holdings LLC

ARCHITECT:
Gary Moore & Associates

LOCATION:
Morgan Hill
Santa Clara
CA

REVISIONS

NO.	DATE	DESCRIPTION

SHEET NAME:
DETAILS

PROJECT NUMBER:
66074

ENGINEER:

DRAFTER:

SHEET NUMBER:
P-D.1

Vicinity Map

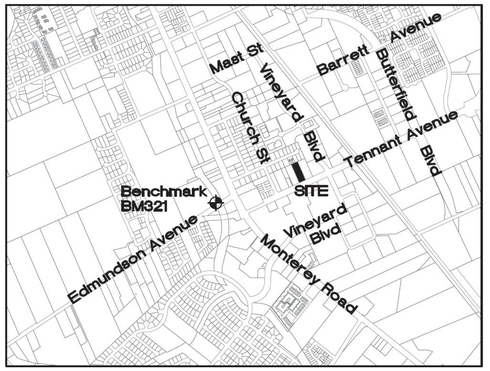

LANDSCAPE PLANS FOR:

TENNANT SQUARE

215 Tennant Ave, Morgan Hill, CA

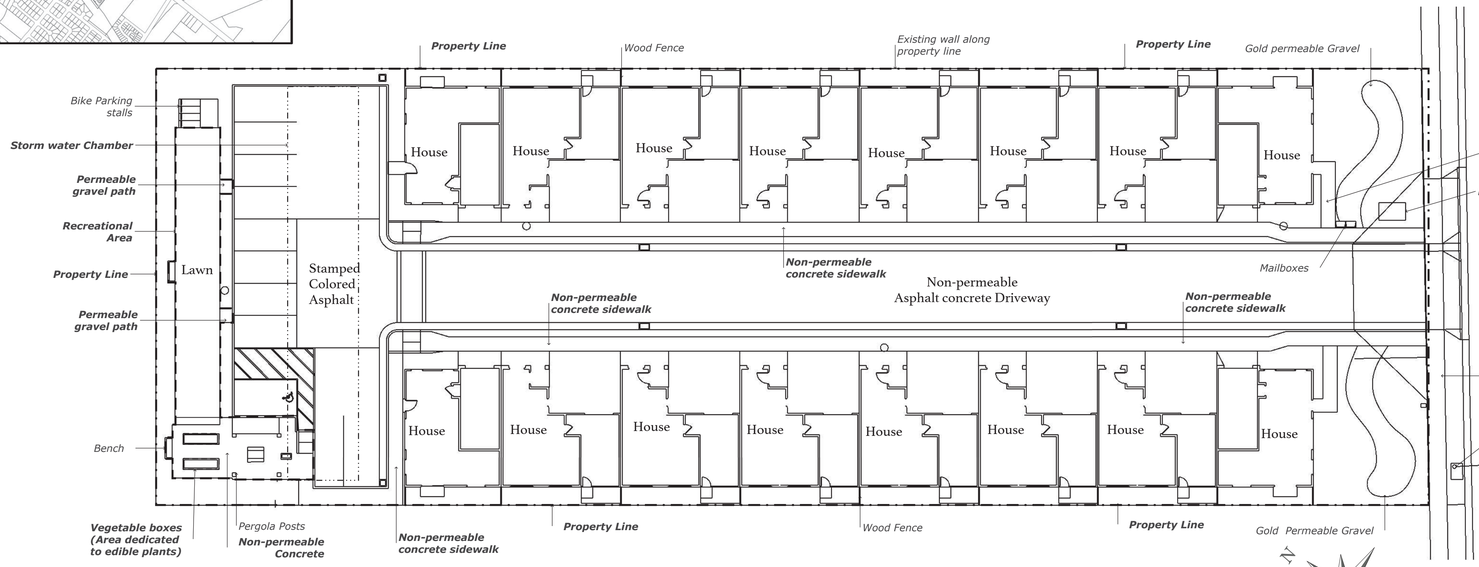

OWNER:

David Halvorsen
Cellphone: (408) 981-9114
Email: dlhalvorsen@gmail.com

PROJECT INFORMATION:

PROPERTY ADDRESS : 215 Tennant Ave, Morgan Hill, CA
PROJECT TYPE: New Multi Family Residence
WATER SUPPLY TYPE: Potable Water, (Valley Water)

APN: 817-04-059

Landscape Architects:
Karen Aitken & Associates, Cal. License #2239
(408) 842-0245
8262 Rancho Real Gilroy CA 95020
Karen@KAA.Design

LANDSCAPE DOCUMENT INDEX

Cover Sheet with Project information	L-0
Landscape Plan	L-1
Irrigation Plan	L-2
Irrigation Details	L-3
Site Amenities	L-4

SCOPE OF WORK

- Planting proposal & installation
- Irrigation system proposal & installation
- Outdoor Pergola & vegetable boxes construction
- Mailbox, parcel locker, bench, bike rack, grill, table installation

Project shall comply with:

· 2022 California Building Code
· 2022 CA Residential
· 2022 CA Plumbing
· 2022 CA Mechanical
· 2022 CA Electrical
· 2022 CA Fire
· 2022 CA Energy Code
· 2022 CA Green Building Code
· Ordinance of Placer County

If there are to be any substitution of plan species from the approved plans due to nurser availability, they must also be Low or Very Low water use.

An irrigation audit is to be conducted by a certified irrigation auditor after final installments and submitted to Enviromental Services Division with Certificate of completion in order to receive the final sign off.

12.03.2024
Owner/Developer

Developer will need to submit receipts and/or invoices for all compost and mulch purchases to Environmental Services Division after final construction.n.

12.03.2024
Owner/Developer

Total landscape area: 5, 320 sf

"After installation of landscaping on property, I agree to have an irrigation audit, landscape audit, irrigation schedule, and maintenance schedule conducted by a Certified Irrigation Auditor and submit it to the City for final project sign off"

"I agree to comply with the requirements of the water conservation in landscaping ordinance and water efficient landscape ordinance and submit a complete landscape documentation package."

06-02-23

WALLACE LABORATORIES, LLC
365 Coral Circle
El Segundo, CA 90245
phone (310) 615-0116 fax (310) 640-6863

December 18, 2024

RE: Soil Management Report
215 Tennant Ave, Morgan Hill, CA
Center of Lot, 36", received Dec. 15, 2024, Our ID No. 24-352-01

The pH is modestly acidic at 6.67. The salinity is modest at 0.62 millimho/cm.

Nitrogen, boron and magnesium are moderate. Sulfur is low. Phosphorus, potassium, iron, manganese, zinc and copper are high. The concentrations of common non-essential heavy metals are low.

Available sodium is low. SAR (sodium adsorption ratio) is 0.3.

The texture is gravelly sandy loam. Based on the non-gravel fraction, it contains 55.8% sand, 28.6% silt and 15.5% clay. The gravel content is 27.7%.

Soils are defined as being gravelly if the gravel content is over 20%. The presence of elevated levels of gravel is undesirable. Gravel dilutes the soil fertility. Soil analyses are made with soil fraction that does not contain gravel. If the amount of gravel were taken into account, the actual fertility would be lower than what is reported. Gravel does not supply nutrients nor does it holds moisture. Gravel blocks root growth. Gravel particles are not permeable. The path of travel of roots, drainage and air exchange is increased, is tortuous and is circuitous in the presence of large amounts of elevated gravel which restricts rooting, drainage and soil aeration. Gravel without fine particles (sand, silt and clay) has rapid percolation but gravel with fine particles (sand, silt and clay) that fill the internal matrix has slow percolation since the voids are occluded.

Soil organic matter is good at 4.39% on a dry weight basis. The carbon:nitrogen ratio is good at 8.9. The soil organic matter is mature.

The estimated rate of water percolation based on Soil Water Characteristics version 6.02.74 model developed by Keith Saxton of the USDA is moderate at 0.87 inches per hour for normal soil compaction. The model is based on the soil texture, percent gravel and percent soil organic matter.

Recommendations

Reduce the gravel content as feasible.

Apply agricultural gypsum at 10 pounds per 1,000 square feet per a 6-inch lift. On a volume basis, incorporate agricultural gypsum at the rate of ½ pound per cubic yard.

For maintenance fertilization, apply Yara or Simplot calcium ammonium nitrate (27-0-0) at 4 pounds per 1,000 square feet about once per quarter. Nitrate helps to increase soil aeration.

If calcium ammonium nitrate (27-0-0) is difficult to locate, apply ammonium sulfate (21-0-0) at 3 pounds per 1,000 square feet and calcium nitrate (15.5-0-0) at 3 pounds per 1,000 square feet about once per quarter. This is the equivalent of applying 3 pounds of ammonium nitrate and 3 pounds of gypsum.

Monitor the site with periodic soil and leaf tissue testing. Adjust the maintenance program as needed.

Sincerely,

Garn Wallace

Garn A. Wallace, Ph. D.
GAW:n

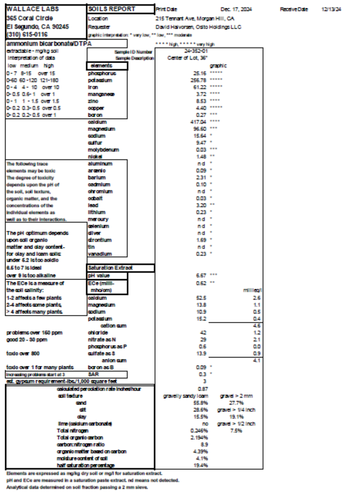

REVISIONS	BY

Karen Aitken & ASSOCIATES
LANDSCAPE ARCHITECTURE & DESIGN

KAREN AITKEN & ASSOCIATES
LANDSCAPE ARCHITECTS
8262 Rancho Real Gilroy Ca. 95020
Calif. Reg.#2239 (408) 842-0245
karen@KAA.Design

TENNANT SQUARE
215 Tennant Ave, Morgan Hill, CA
COVER SHEET

LICENSED LANDSCAPE ARCHITECT
KAREN JONES AITKEN
No. 2239
Exp. 8–31–25
STATE OF CALIFORNIA

DATE: 09-01-23

DRAWN: IN

JOB: TENNANT

L-0

RECCOMENDATIONS FROM SOILS REPORT (SEE WALLACE LABS WELO REPORT 24-352-01)

Reduce the gravel content as feasible.

Apply agricultural gypsum at 10 pounds per 1,000 square feet per a 6-inch lift. On a volume basis, incorporate agricultural gypsum at the rate of ½ pound per cubic yard.

For maintenance fertilization, apply Yara or Simplot calcium ammonium nitrate (27-0-0) at 4 pounds per 1,000 square feet about once per quarter. Nitrate helps to increase soil aeration.

If calcium ammonium nitrate (27-0-0) is difficult to locate, apply ammonium sulfate (21-0-0) at 3 pounds per 1,000 square feet and calcium nitrate (15.5-0-0) at 3 pounds per 1,000 square feet about once per quarter. This is the equivalent of applying 3 pounds of ammonium nitrate and 3 pounds of gypsum.

Monitor the site with periodic soil and leaf tissue testing. Adjust the maintenance program as needed.

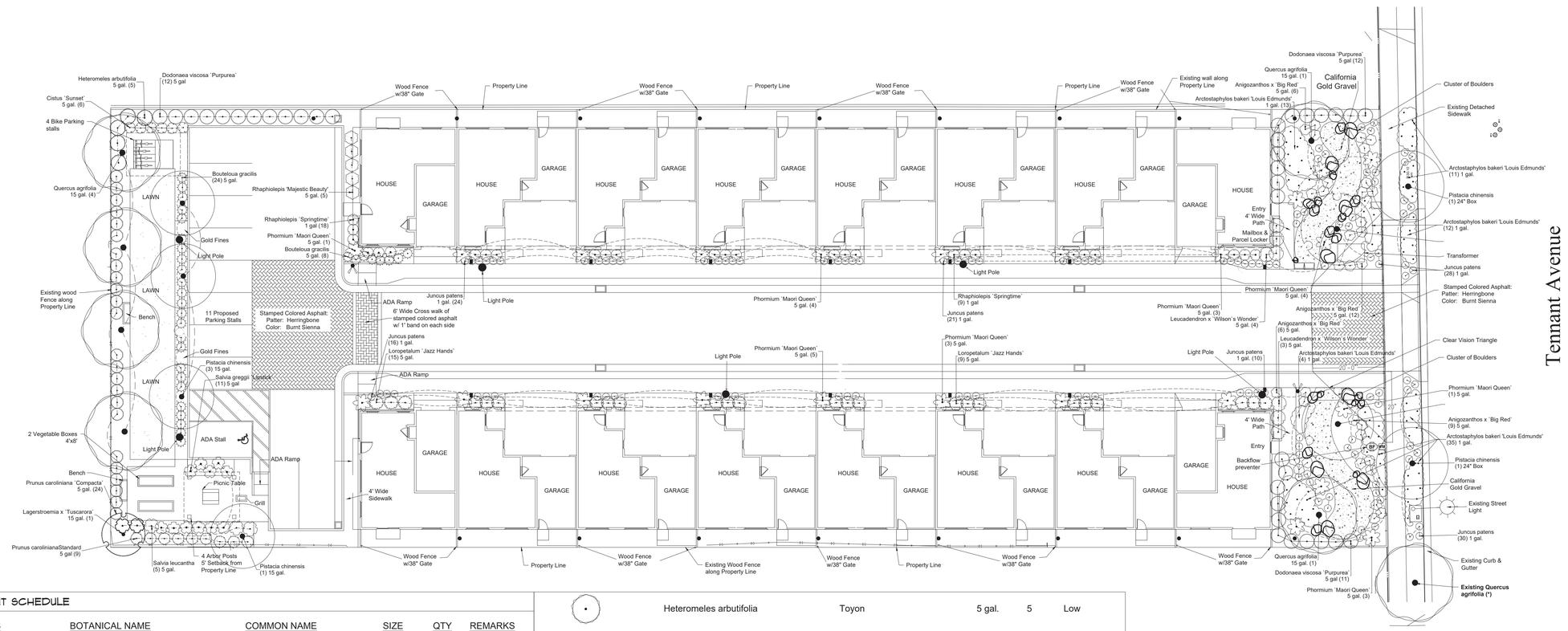

PLANT SCHEDULE

TREES	BOTANICAL NAME	COMMON NAME	SIZE	QTY	REMARKS WUCOLS
	Lagerstroemia x `Tuscarora`	Crape Myrtle Coral Pink	15 gal.	1	Low
	Lagerstroemia x `Tuscarora`	Crape Myrtle Coral Pink	24"box	2	Low
	Pistacia chinensis	Chinese Pistache	15 gal.	4	Low
	Pistacia chinensis	Chinese Pistache	24" Box	2	Low
	Prunus caroliniana `Compacta`	Carolina Laurel Cherry	5 gal.	24	Low
	Quercus agrifolia	Coast Live Oak	15 gal.	7	Very Low
SHRUBS	**BOTANICAL NAME**	**COMMON NAME**	**SIZE**	**QTY**	**REMARKS WUCOLS**
	Anigozanthos x `Big Red`	Big Red Kangaroo Paw	5 gal.	33	Low
	Bouteloua gracilis	Blue grama	5 gal.	32	Low
	Cistus `Sunset`	Sunset Rockrose	5 gal.	6	Low
	Dodonaea viscosa `Purpurea`	Purple Leafed Hopseed Bush	5 gal	35	Low
	Heteromeles arbutifolia	Toyon	5 gal.	5	Low
	Juncus patens	California Gray Rush	1 gal.	128	Low
	Leucadendron x `Wilson`s Wonder`	Conebush	5 gal.	7	Low
	Loropetalum `Jazz Hands`	Loropetalum Plum Delight	5 gal.	24	Low
	Phormium `Maori Queen`	New Zealand Flax	5 gal.	24	Low
	PrunusCarolinianaStandard	Carolina Laurel Cherry	5 gal	9	Low
	Rhaphiolepis 'Majestic Beauty'	Majestic Beauty	5 gal.	5	Low
	Rhaphiolepis `Springtime`	White Indian Hawthorn	1 gal	27	Low
	Salvia greggii `Lipstick`	Autumn Sage	5 gal	11	Low
	Salvia leucantha	Mexican Bush Sage	5 gal.	5	low
GROUND COVERS	**BOTANICAL NAME**	**COMMON NAME**	**SIZE**	**QTY**	**REMARKS WUCOLS**
	Arctostaphylos bakeri 'Louis Edmunds'	Louis Edmunds Manzanita	1 gal.	75	Low
	Dwarf tall fescue sod rolls		11' 9" x 86' 1.5" = 1012 SQFT		High

* NOTE: All trees inside or close to the Clear Vision Triangle must have the bottom of it's canopy is at least 8' off of the ground. Shrubs must be less than 3' in the Clear Vision Triangle.
(*) Field Verify that proposed Tree Species Match the (E) Trees at Shadow Pines (Tract) along Tennant Avenue North Side and West of Church Street

PLANTING NOTES, SOIL PREPARATION, MULCH AND AMENDMENTS

1. The contractor shall locate and verify the existence of all utilities prior to starting work.
2. The plant material locations are diagrammatic and subject to change in the field as directed by the Landscape Architect.
3. All plant material shall conform to the guidelines established by the current American Standard of Nursery Stock, published by The American Association of Nurserymen.
4. The plant count is for contractor's convenience. In case of discrepancy, the plan shall govern.
5. All trees to be staked plumb unless otherwise noted.
6. All planted areas shall be free from rocks and debris greater than 2" in diameter.
7. Prior to the planting of any materials, compacted soils shall be transformed to a friable condition. On engineered slopes, only amended planting holes need meet this requirement;
8. Soil amendments shall be incorporated according to recommendations of the soil report and what is appropriate for the plants selected;
9. For landscape installations, compost at a rate of a minimum of four cubic yards per 1,000 square feet of permeable area shall be incorporated to a depth of six inches into the soil. Soils with greater than 6% organic matter in the top 6 inches of soil are exempt from adding compost and tilling;
10. A minimum three inch (3") layer of mulch shall be applied on all exposed soil surfaces of planting areas except in turf areas, creeping or rooting groundcovers, or direct seeding applications where mulch is contraindicated. To provide habitat for beneficial insects and other wildlife, up to 5 % of the landscape area may be left without mulch. Designated insect habitat must be included in the landscape design plan as such;
11. Stabilizing mulching products shall be used on slopes that meet current engineering standards;
12. The mulching portion of the seed/mulch slurry in hydro-seeded applications shall meet the mulching requirement;
13. Organic mulch materials made from recycled or post-consumer shall take precedence over inorganic materials or virgin forest products unless the recycled post-consumer organic products are not locally available. Organic mulches are not required where prohibited by local Fuel Modification Plan Guidelines or other applicable local ordinances.
14. Types of mulch NOT allowed include: bark mulch, gorilla hair, shredded cedar, or virgin materials.

North

GRAPHIC SCALE

(IN FEET)
1/16 inch = 1 ft.

REVISIONS	BY

AITKEN ASSOCIATES
LANDSCAPE ARCHITECTS
8262 Rancho Real Gilroy, CA 95020
Calif. Reg. #2239 (408) 842-0245
karen@kaa.design

TENNANT SQUARE

215 Tennant Ave, Morgan Hill,CA

LANDSCAPE PLAN

LICENSED LANDSCAPE ARCHITECT
KAREN JONES AITKEN
No. 2239
Exp. 8-31-25
STATE OF CALIFORNIA

DATE	09-01-23
SCALE	1/16"= 1'-0"
DRAWN	IN
JOB	TENNANT

L-1

MAWA EPPT and ETWU Calculations

Project Name: Tennant Square
Project Location: 215 Tennant Ave. Morgan Hill
Total Landscape Area: 5,320.0 sq. ft.
Date: 9/1/2023

MAWA CALCULATION

MAWA = (Eto)(.62)((.0.55xLA) + (1-ETAF x SLA))]

MAWA = Maximum Applied Water Allowance (gallons per year)
Eto = Reference Evapotranspiration (inches per year)
.62 = Conversion Factor (to gallons)
0.55 = Et Adjustment Factor (ETAF)
LA = Landscape Area including SLA (square feet)
0.45 = Additional Water Allowance for SLA
SLA = Special Landscape Area (square feet)

Eto =	49.5
Conversion	0.62
ETAF	0.55
LA =	5,320
SLA =	0

MAWA =	89,798.9	gallons per year
	12,005.2	cubic feet per year

MAWA with EPPT

MAWA = (Eto-Eppt)(.62)((.0.55xLA) + (1-ETAF x SLA)]
Eppt= 25% of Annual precipitation

Eto =	49.5
Eppt=	12.375
ETAF=	0.55
LA =	5,320
SLA =	0

MAWA w/ EPPT =	67,372.2	gallons per year
	9,007.0	cubic feet

ETWU CALCULATION

ETWU = (Eto)(.62)((PF/IE)(LA)

ETWU = Estimated Total Water Use Per Year (gallons)
ETo = Reference Evapotranspiration
PF = Plant Factor from WUCOLS (Region 2, Water Use: H 0.7 - 0.9, M 0.4 - 0.6, L 0.1 - 0.3, VL < 0.1, All Turf 0.8)
LA = Landscape Area (High, Medium, and low water use areas)(square feet)
SLA = Special Landscape Area
.62 = Conversion Factor
IE = Irrigation Efficiency (drip spray and bubblers .81, sub surface .81, spray sprinklers .75
ET Adjustment Factor (ETAF) .55 for Residential and .45 for Non Residential

Reference Evapotranspiration (Eto)	49.5	Morgan Hill, Ca.

REGULAR LANDSCAPE AREAS

Hydrozone #/ Plant Description	Irrigation Method	Plant Factor (PF)	Irrigation Efficiency (IE)	ETAF (PF/IE)	Landscape Area (sq. ft)	ETAF x Area	ETWU
1.) Low water Use Shrubs	Drip	0.3	0.81	0.37037037	537.0	198.9	6,103.9
2.) Low water Use Shrubs	Drip	0.2	0.81	0.24691358	815.0	201.2	6,175.9
3.) Low Water Use Trees	Drip	0.3	0.81	0.37037037	120.0	44.4	1,364.0
4.) Low Water Use Shrubs	Drip	0.2	0.81	0.24691358	811.0	200.2	6,145.6
5.) Low Water Use Shrubs	Drip	0.3	0.81	0.37037037	597.0	221.1	6,785.9
6.) Low Water Use Shrubs	Drip	0.3	0.81	0.37037037	813.0	301.1	9,241.1
7.) High Water Use Lawn	Spray	0.8	0.75	1.06666667	1,012.0	1,079.5	33,128.8
8.) Low Water Use Trees	Drip	0.3	0.81	0.37037037	170.0	63.0	1,932.3
9.) Low Water Use Shrubs	Drip	0.3	0.81	0.37037037	445.0	164.8	5,058.2
				Total sf ft.	5,320.0	Totals 2,474.3	Totals 75,935.7

SPECIAL LANDSCAPE AREAS

Hydrozone #/ Plant Description	Irrigation Method	Plant Factor (PF)	Irrigation Efficiency (IE)	ETAF (PF/IE)	Landscape Area (sq. ft)	ETAF x Area	ETWU
				1	0	0	0.0
					Totals 0	Totals 0	Totals 0.0
						ETWU TOTAL	75,935.7
						MAWA	89,798.9

ETAF CALCULATIONS

Regular Landscape Areas

Total ETAF x Area	2,474.3
Total Area	5,320.0
Average ETAF	0.4651

Average ETAF for Regular Landscape Areas must be .55 or below for residential areas, and .45 or below for non residential areas.

Tennant Res. Irrigation Schedule

Valve #	Hydrozone/Water Use	Days of the Week	Run Time	Gal. Per Day
1	Low Water Use/ Shrubs	Mon, Wed, Fri	11.5 min	39.13 Gal
2	Low Water Use/ Shrubs	Mon, Wed, Fri	11.6 min	39.58 Gal
3	Low Water Use - Trees	Tue, Wed	5.1 min	11.6 Gal
4	Low Water Use/ Shrubs	Mon, Wed, Fri	11.6 min	39.39 Gal
5	Low Water Use/ Shrubs	Mon, Wed, Fri	12.8 min	43.5 Gal
6	Low Water Use/ Shrubs	Mon, Wed, Fri	17.4 min	59.24 Gal
7	High Water Use - Lawn	Mar-Oct: Mon, Wed, Fri Nov-Feb: Mon	44.3 min	162.74 Gal
8	Low Water Use - Trees	Mon, Wed, Fri	4.9 min	16.52 Gal
9	Low Water Use/ Shrubs	Mon, Wed, Fri	9.5 min	32.42 Gal

Uses Rain Sensor & Automatically Adjusts for the time of year

IRRIGATION SCHEDULING AND MAINTENANCE

1. IRRIGATION TO BE SCHEDULED TO OCCUR AFTER 7 PM AND BEFORE 9 AM.
2. IRRIGATION SCHEDULE SHALL BE REDUCED (FREQUENCY AND DURATION) AFTER PLANTS ARE ESTABLISHED (1 YEAR).
3. IRRIGATION SCHEDULE SHALL BE ADJUSTED SEASONALLY BASED ON PLANT NEEDS.
4. IRRIGATION SCHEDULE SHALL BE PROVIDED TO APPROPRIATE PERSONNEL AND POSTED NEAR IRRIGATION CONTROLLER.
5. IRRIGATION SYSTEM TO BE INSEPCTED REGULARLY AND MAINTAINED IN GOOD WORKING CONDITION.
6. REPAIRS TO BE MADE USING IDENTICAL OR IMPROVED PARTS.

.

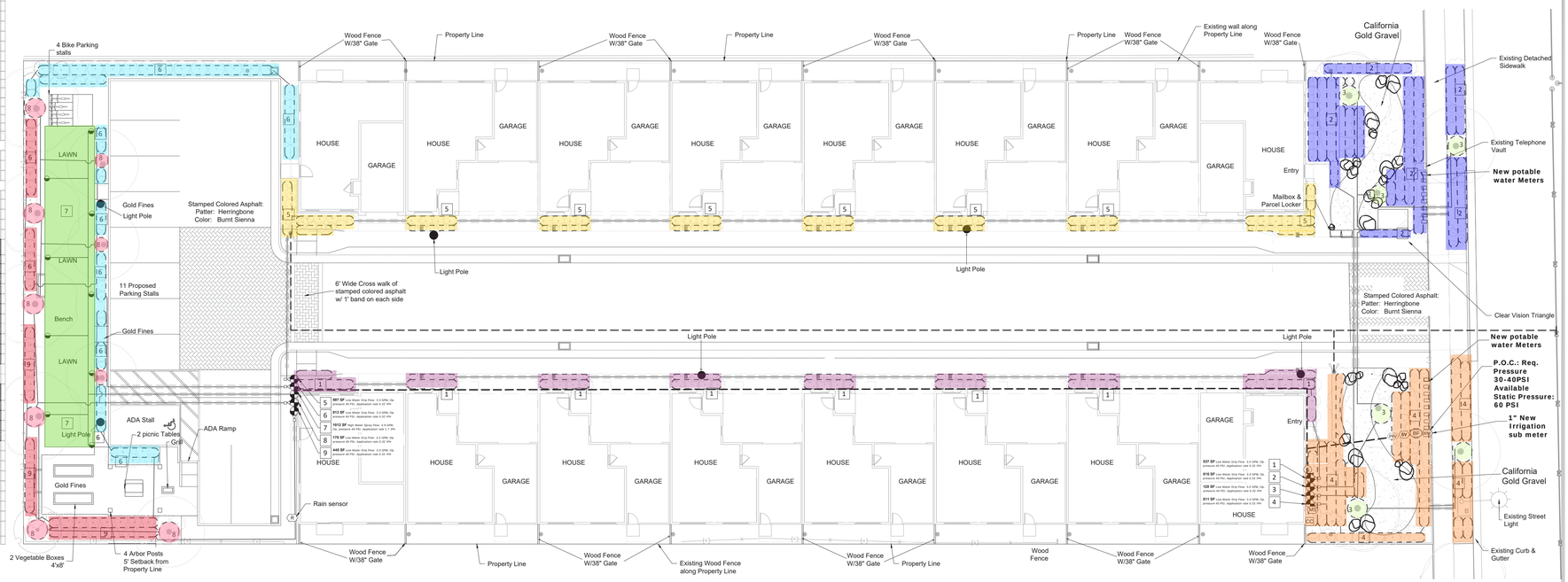

Landscape Maintenance Schedule

	Jan	Feb	Mar	Apr	May	Jun	Jul	Aug	Sep	Oct	Nov	Dec	Total
Fine Turf Maintenance													
Mowing/ Edging	1	1	3	4	5	4	5	4	4	3	1	1	36
Blow Hard Surfaces	1	1	3	4	5	4	5	4	4	3	1	1	36
Fertilization: Lawn		1				1				1			3
Weed Control- Pre-Emergent			1				1						2
Weed Control- Post-Emergent				1					1				2
Fire Ant Treatment Mound As needed				1		1		1					3
Trees, Shrubs & Beds													
Prune Shrubs			1	1	1	1	1	1	1	1			8
Canopy Lift - 8' Trees Under 4" Caliper		1											1
Pruning Flowering Plants			1		1		1		1		1		5
Surface Fertilization Shrubs			1						1				
Weed Control	1	1	3	4	5	4	5	4	4	3	1	1	36
Mulch/Top Cover Beds			1										1
Seasonal Color													
Flower Color Change (per application)						1				1			2
Weed Control-beds	2	2	3	4	5	4	5	4	4	3	2	2	40
Debris Removal	2	2	3	4	5	4	5	4	4	3	2	2	40
Irrigation													
System Inspection	1	1	1	1	1	1	1	1	1	1	1	1	12
Water adjustment	1	1	1	1	1	1	1	1	1	1	1	1	12
Manager Inspection	1	2	4	4	5	4	5	4	4	3	2	2	40

Note: Numbers in legend represent the number of times each activity has to be implemented in a month.

No Areas irrigated with recycled water.
No water features presented on plan.
No rain harvesting technologies implemented.
Irrigation system meets a minimum irrigation of 75%
Lawn Area is for recreation and does NOT exceed 25% of total landscape area.
Overhead irrigation shall not be permitted within 24" of any non-permeable surface
Areas less than ten feet in width in any direction shall be irrigated with subsurface irrigation or other means that produces no runoff or overspray.

IRRIGATION NOTES

1. This irrigation system is designed to operate on a static pressure of 60 psi provided by the city. If a discrepancy exists please notify the landscape architect.
2. The irrigation system is to be installed in conformance with all local codes.
3. This irrigation design is diagrammatic in nature and does not represent an exact layout. The contractor shall make minor adjustments in head, valve, and piping layout. For graphic clarity, piping may be shown outside of planting areas but should be installed in beds whenever possible.
4. Contractor shall review all plans and documents pertaining to the project prior to the start of work to coordinate work with other trades.
5. Contractor is to inspect existing irrigation system to ensure that the mainline can be reused for new irrigation layout.
6. Remote control valves shall be installed flush with finish grade and should be installed in planting areas only.
7. Where pipe passes under driving surfaces, and walks provide PVC sleeves as noted on plans.
8. Contractor to confirm the location of all existing utilities and underground structures prior to excavation of trenches. Contractor to repair any damages caused by, or during the performance of his work at no extra cost to the owner.
9. Controller shall be a pedestal mount and located at the power source provided as shown on phase 1 and 2. Programming of the controllers shall be the responsibility of the contractor.
10. All electrical connections for the controller shall be installed by a licensed electrical contractor. All work shall comply with the most current standards and codes at the time of installation. Contractor shall hard wire new clocks at closest, safest, location.
11. Tubing should be spaced at 18" o.c. but contractor shall adjust all drip distribution tubing to effectively irrigate all plant material.
12. Sprinkler heads and emitters must be selected for proper area coverage, application rate, operation pressure, adjustment capability, and ease of maintenance.
13. Irrigation controller will be capable of percent adjustment, multiple programming, and connect with rain sensors.
14. If the static pressure is above or below the required dynamic pressure of the irrigation system, pressure-regulating devices such as inline pressure regulators, booster pumps, or other devices shall be installed to meet the required dynamic pressure of the irrigation system
15. If there are slopes greater than 25% and, if there are, they shall not be irrigated within an irrigation sustem with an application rate exceeding three-fourths of one inch per hour.

IRRIGATION_LEGEND

SYMBOL	MANUFACTURER/MODEL	QTY
	Tree Ring Irrigation	18
	Area to Receive Dripline Rain Bird XFS-06-12	
SYMBOL	MANUFACTURER/MODEL	QTY
	Rainbird XCZ-100-PRF Drip Valve	9
	Rainbird PESB-R Valve	1
	Rainbird RD 1800 Series 6" Heads	9
WM	New Irrigation 1" Water Meter	
BF	Febco 825Y 1"	
00	HYDROZONE LABEL	1

CC	Rain Bird ESP4-SMTE with (3) ESP-SM6
SV	Master Shutoff Valve behind Meter
	Irrigation Lateral Line: PVC Schedule 40
	Irrigation Mainline: PVC Schedule 40
	Lateral Line :PVC
R	Rainbird WR2-48 Rain, Freeze, wind Sensor (Use
MS	Rainbird SMRT-Y Soil Moisture Sensor
S	Rainbird Flow Sensor FS-200-P Note: Provide a clear, unobstructed distance of at least 10xs the pipe's diameter upstream of the sensor and at least 5xs the pipe's diameter downstream of the sensor
PRV	Zurn 600XL Pressure Reducing Valve

"I have complied with the criteria of the ordinance and applied them accordingly for the efficient use of water in the irrigation design plan. "

North
GRAPHIC SCALE
(IN FEET)
1/16 inch = 1 ft.

REVISIONS	BY

AITKEN ASSOCIATES
LANDSCAPE ARCHITECTS
8262 Rancho Real Gilroy, CA 95020
Calif. Reg. #2239 (408) 842-0245
karen@kaa.design

TENNANT SQUARE
215 Tennant Ave, Morgan Hill,CA

IRRIGATION PLAN

LICENSED LANDSCAPE ARCHITECT
KAREN JONES AITKEN
No. 2239
Exp. 8-31-25
STATE OF CALIFORNIA

DATE	09-01-23
SCALE	1/16"=1'-0"
DRAWN	IN
JOB	TENNANT

L-2

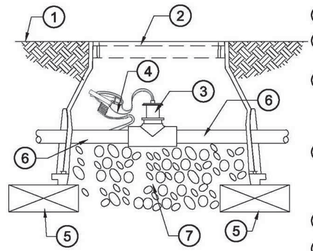

1. FINISH GRADE
2. CARSON VALVE BOX WITH LOCKING LID
3. FLOW SENSOR (SEE IRRIGATION LEGEND FOR MANUFACTURER, MODEL AND SIZE)
4. IRRIGATION CONTROL WIRES WITH MINIMUM 12" COIL OF WIRE
5. (4) BRICKS
6. MAINLINE PIPE FROM MASTER VALVE
7. 3" MINIMUM DEPTH OF 3/4" WASHED GRAVEL

NOTES:

1- FLOW SENSOR WIRE SHALL BE PER THE CONTROLLER MANUFACTURER'S SPECIFICATIONS.

2- INSTALL FLOW SENSOR PER MANUFACTURER'S SPECIFICATIONS AND RECOMMENDATIONS.

3- ALL WIRE RUNS SHALL BE CONTINUOUS WITHOUT ANY SPLICES. WIRE CONNECTIONS SHALL BE MADE USING DBR/Y-6 CONNECTORS OR APPROVED EQUAL.

FLOW SENSOR

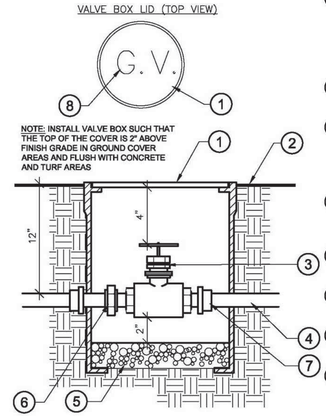

1. CARSON ROUND VALVE BOX (SEE IRRIGATION EQUIPMENT SCHEDULE) INSTALL FLUSH W/ FINISH GRADE
2. FINISH GRADE
3. GATE VALVE (SEE IRRIGATION LEGEND AND IRRIGATION EQUIPMENT SCHEDULE)
4. PRESSURIZED PVC MAINLINE
5. 1 CU CRUSHED GRAVEL
6. BRASS UNION
7. SCH 80 PVC NIPPLE
8. HEAT BRAND "G.V." IN 2" TALL CHARACTERS ON TOP CENTER OF VALVE BOX LID

ISOLATION SHUT OFF VALVE

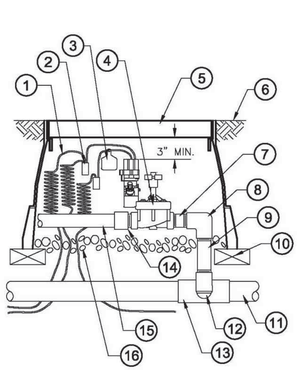

1. 30-INCH LINEAR LENGTH OF WIRE, COILED
2. WATERPROOF CONNECTION RAIN BIRD SPLICE-1 (1 OF 2)
3. ID TAG: RAIN BIRD VID SERIES
4. REMOTE CONTROL VALVE: RAIN BIRD PESB-PRS-D
5. VALVE BOX WITH COVER: RAIN BIRD VB-STD
6. FINISH GRADE/TOP OF MULCH
7. PVC SCH 80 NIPPLE (CLOSE)
8. PVC SCH 40 ELL
9. PVC SCH 80 NIPPLE (LENGTH AS REQUIRED)
10. BRICK (1 OF 4)
11. PVC MAINLINE PIPE
12. SCH 80 NIPPLE (2-INCH LENGTH, HIDDEN) AND SCH 40 ELL
13. PVC SCH 40 TEE OR ELL
14. PVC SCH 40 MALE ADAPTER
15. PVC LATERAL PIPE
16. 3.0-INCH MINIMUM DEPTH OF 3/4-INCH WASHED GRAVEL

RAIN BIRD PESB ELECTRONIC CONTROL VALVE

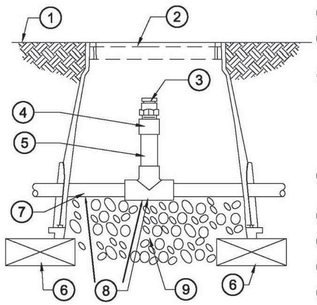

1. FINISH GRADE
2. SMALL CARSON VALVE BOX
3. DRIP AIR RELIEF VALVE INSTALLED AT HIGH POINTS OF THE DRIP ZONE - MATCH TO DRIPLINE MANUFACTURER
4. PVC SCH 40 FEMALE ADAPTER
5. PVC SCH 80 RISER
6. BRICK
7. PVC HEADER PIPE
8. PVC SCH 40 TEE
9. 3" MINIMUM DEPTH OF 3/4" WASHED GRAVEL

AIR RELIEF VALVE IN PVC HEADER

1. TOP OF MULCH
2. FINISH GRADE
3. 30-INCH LINEAR LENGTH OF WIRE, COILED
4. WATERPROOF CONNECTION (1 OF 2)
5. ID TAG
6. JUMBO VALVE BOX WITH COVER (TAN IN COLOR)
7. PVC SCH 80 NIPPLE, CLOSE (1 OF 3)
8. PVC SCH 80 NIPPLE (LENGTH AS REQUIRED)
9. PVC SCH 40 ELL
10. PVC SCH 80 NIPPLE (2-INCH LENGTH, HIDDEN) AND PVC SCH 40 ELL
11. PVC SCH 40 TEE OR ELL
12. BRICK (1 OF 4)
13. 3-INCH MINIMUM DEPTH OF 3/4-INCH WASHED GRAVEL
14. PVC MAINLINE
15. DRIP CONTROL ZONE KIT (SEE IRRIGATION SCHEDULE)
16. PVC SCH 80 UNION FOR SERVICING ASSEMBLY
17. PVC SCH 40 MALE ADAPTER
18. PVC LATERAL SUPPLY LINE

DRIP CONTROL ZONE

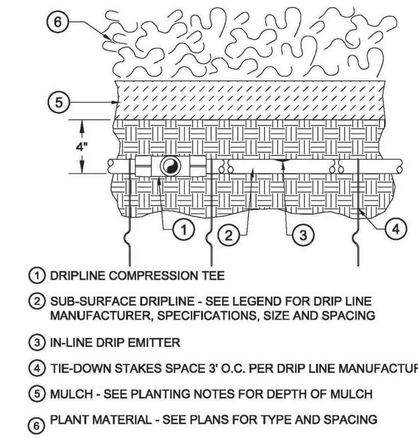

1. DRIPLINE COMPRESSION TEE
2. SUB-SURFACE DRIPLINE - SEE LEGEND FOR DRIP LINE MANUFACTURER, SPECIFICATIONS, SIZE AND SPACING
3. IN-LINE DRIP EMITTER
4. TIE-DOWN STAKES SPACE 3' O.C. PER DRIP LINE MANUFACTURER
5. MULCH - SEE PLANTING NOTES FOR DEPTH OF MULCH
6. PLANT MATERIAL - SEE PLANS FOR TYPE AND SPACING

SUB-SURFACE DRIPLINE BURIAL

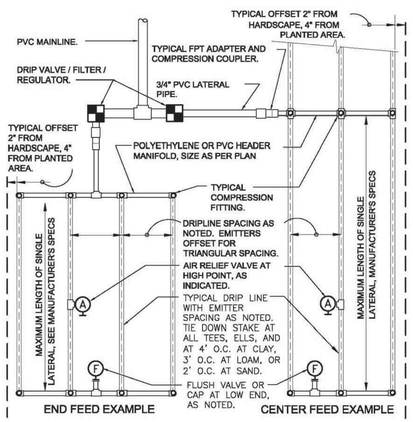

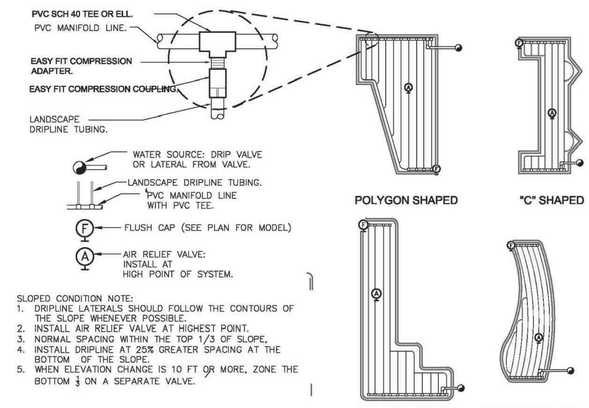

TYPICAL DRIP UT

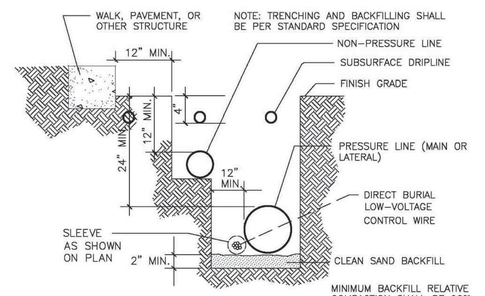

NOTE:

1. ALL PLASTIC PIPING TO BE SNAKED IN TRENCHES
2. BUNDLE & TAPE WIRING AT 10' INTERVALS
3. TIE A LOOSE 20" LOOP IN WIRING AT CHANGE OF DIRECTION GREATER THAN 30 . DEGREES. UNTIE ALL LOOPS AFTER ALL CONNECTIONS HAVE BEEN MADE.
4. INSTALL ALL CONTROL WIRE ON THE UNDERSIDE OF THE MAINLINE PIPE.
5. SEE IRRIGATION SPECIFICATIONS FOR BACKFILL AND COMPACTION REQUIREMENTS.
6. PIPE DEPTH FOR 2 1/2" AND LARGER SHALL BE 36" MINIMUM.
7. PIPE DEPTH FOR 2" AND SMALLER SHALL BE 24" MINIMUM.
8. PIPE DEPTH FOR NON-PRESSURE LATERAL LINES SHALL BE 12" MINIMUM.
9. PIPE DEPTH FOR ALL LINES UNDER PAVEMENT SHALL BE 36" MINIMUM.

TRENCHING DETAILS

REVISIONS	BY

AITKEN ASSOCIATES
LANDSCAPE ARCHITECTS
8262 Rancho Real Gilroy, CA 95020
Calif. Reg. #2239 (408) 842-0245
karen@kaa.design

TENNANT SQUARE

215 Tennant Ave, Morgan Hill,CA

IRRIGATION DETAILS

LICENSED LANDSCAPE ARCHITECT
KAREN JONES AITKEN
No. 2239
Exp. 8-31-25
STATE OF CALIFORNIA

DATE	09-01-23
SCALE	
DRAWN	IN
JOB	TENNANT

L-3

Wood Fence Detail

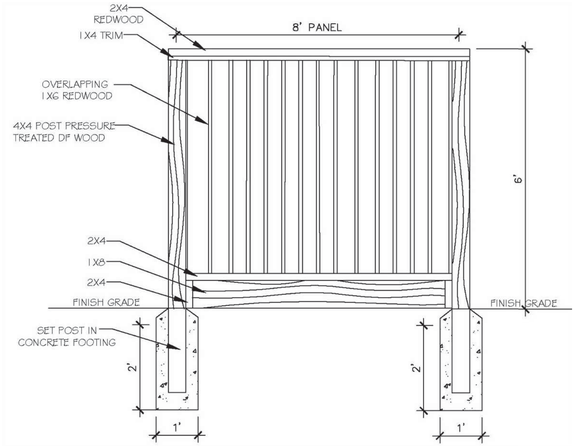

Note: Fence slats should overlap by a min. of two inches and be screwed to the framing rather than nailed.

Arbor Cross Section A-A'

Scale 1/2" = 1'-0"

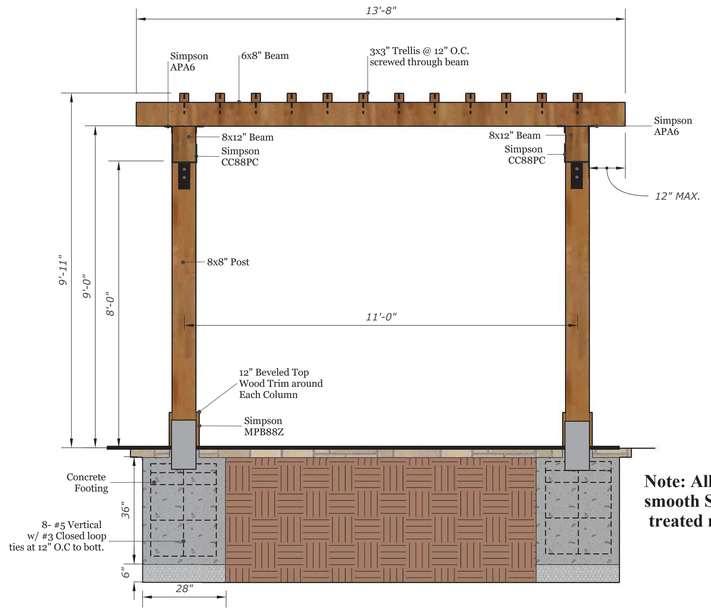

Arbor Cross Section B-B'

Scale 1/2" = 1'-0"

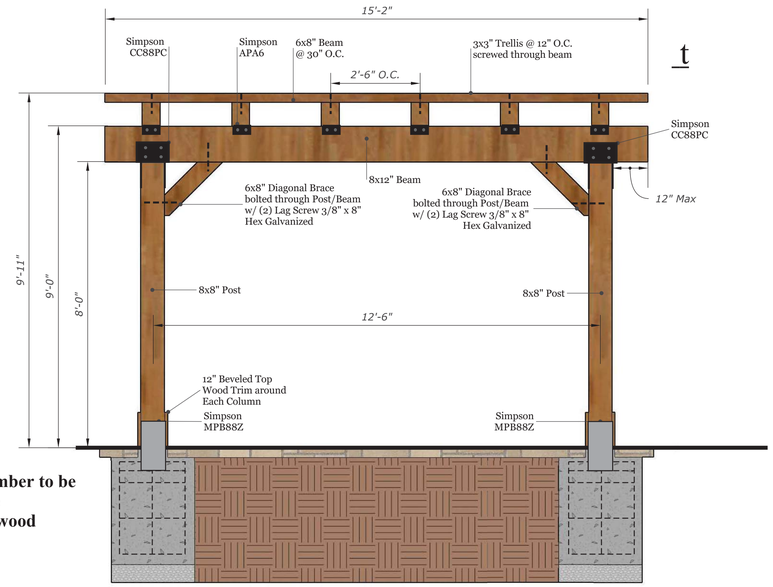

Note: All exposed lumber to be smooth S4S pressure treated natural Redwood

Mailbox Detail

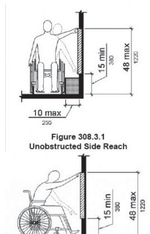

Figure 308.3.1
Unobstructed Side Reach

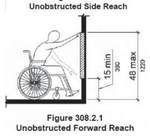

Figure 308.2.1
Unobstructed Forward Reach

Brand: Florence Commercial Mailboxes
Item: 16 Door Classic Cluster Mailbox
Model : AFECBU16
Dimension: 65.1"H 33.8"W 21.3" D
ADA & USPS Compliant

Parcel Locker Detail

Brand: Florence Commercial Mailboxes
Item: 4 Parcel Lockers on Pedestal
Model : 1590-T2CS
Dimension: 62" H 30.5" W 18" D
ADA & USPS Compliant

Bench Detail

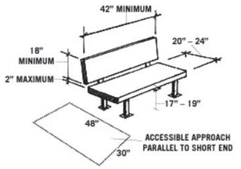

Brand: PollyProducts.com
Item: TRADITIONAL 6′ ADA BACKED BENCH (with no arm rest)
Model no: TB6H4
ADA Compliant

Bike Rack Detail

Brand: Du Mor
Item: Powder coated bike rack
Model no: 83/S-1

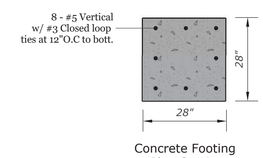

Concrete Footing
Plan Section

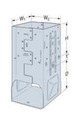

Simpson MPB88Z 8x8 Moment Post Base

Simpson CC88PC

Simpson APVA6

Picnic Bench Detail

Regal Style
ADA Portable

6 Ft. Regal Table with (2) 4 ft. Attached Seats, Rounded Corners, ADA – Portable.
- 198 Lbs.
- Top and seats are made with plastisol coated ¾" #9 expanded metal inside a 2" x 2" x 1/8" angle iron frame.
- 4" powder coated, galvanized steel inground pedestal.
- 2 Ft. extension on one end for ADA compliancy.
- With or without umbrella hole.
- Some assembly required.

Item #: WC RP6ADAP

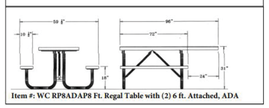

Item #: WC RP8ADAP8 Ft. Regal Table with (2) 6 ft. Attached, ADA

Brand: National outdoor furniture

Outdoor Grill Detail

Brand: Du Mor
Item: Grill for Embedment
Model no: 21-00

Vegetable Planter Detail

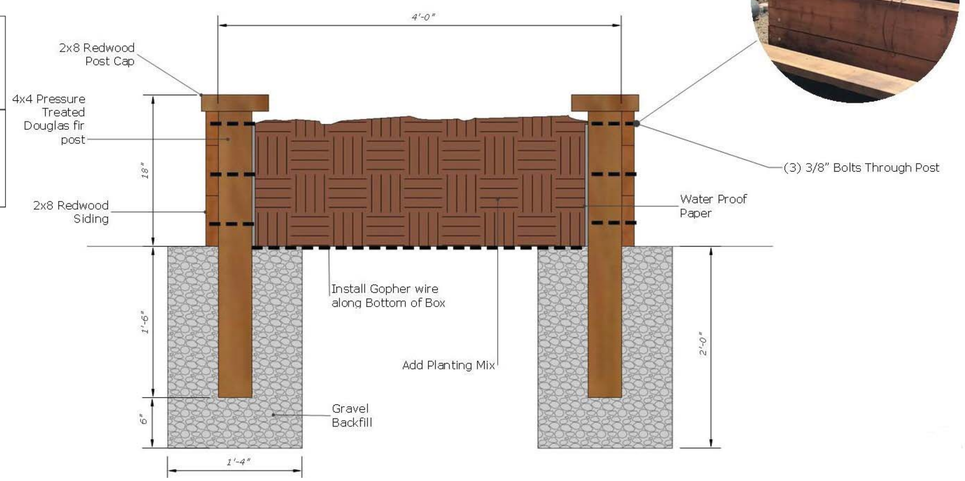

Arbor Isometric View

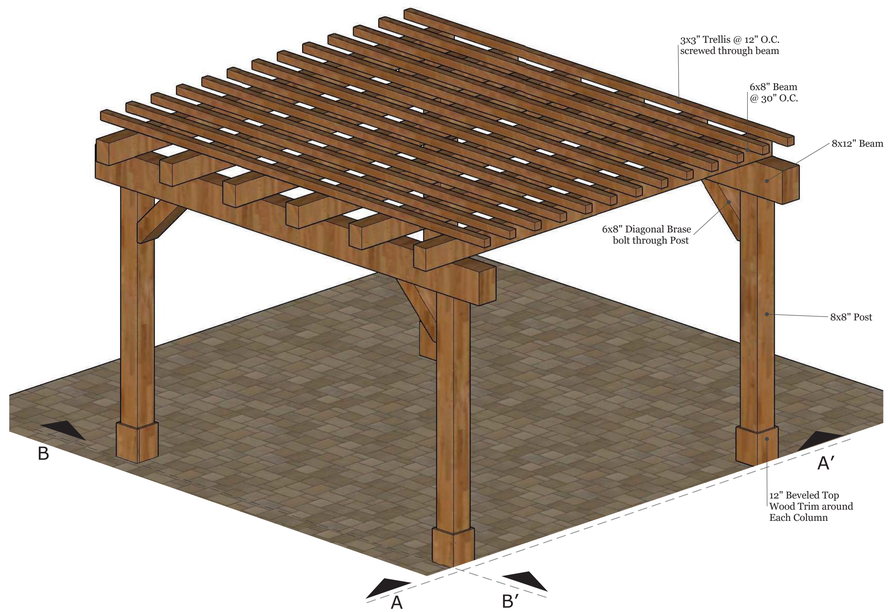

REVISIONS	BY

KAREN AITKEN & ASSOCIATES
LANDSCAPE ARCHITECTS
8262 Rancho Real Gilroy Ca. 95020
Calif. Reg.#2239 (408) 842-0245
karen@KAA.Design

TENNANT SQUARE
215 Tennant Ave, Morgan Hill, CA
SITE AMENITIES

LICENSED LANDSCAPE ARCHITECT
KAREN JONES AITKEN
No. 2239
Exp. 8-31-25
STATE OF CALIFORNIA

DATE: 09-01-23

DRAWN: IN

JOB: TENNANT

L-4

ISSUED DATE:XX/XX/XX

CERTIFICATE OF COMPLIANCE | CF1R-PRF-01E
Project Name: Tenant Square | **Calculation Date/Time:** 2024-01-25T10:21:38-08:00 | (Page 17 of 32)
Calculation Description: Title 24 Analysis | **Input File Name:** 66074 T24 Building A.ribd19x

FENESTRATION / GLAZING

01	02	03	04	05	06	07	08	09	10	11	12	13	14
Name	Type	Surface	Orientation	Azimuth	Width (ft)	Height (ft)	Mult.	Area (ft^2)	U-factor	U-factor Source	SHGC	SHGC Source	Exterior Shading
(2) Window 1 6046SL 2	Window	Rear Exterior Wall 2x6 6	Back	180			1	54	0.3	NFRC	0.23	NFRC	Bug Screen
Door 1 16080SLD 3	Window	Front Exterior Wall 2x6 7	Front	0	16	8	1	128	0.3	NFRC	0.23	NFRC	Bug Screen
Window 1 8660SL 3	Window	Front Exterior Wall 2x6 7	Front	0			1	51	0.3	NFRC	0.23	NFRC	Bug Screen
Door A1 3080FR 3	Window	Left Exterior Wall 2x6 6	Left	90			1	24	0.3	NFRC	0.23	NFRC	Bug Screen
Window 3056SL 3	Window	Rear Exterior Wall 2x6 7	Back	180			1	17	0.3	NFRC	0.23	NFRC	Bug Screen
Window 6056SL 3	Window	Rear Exterior Wall 2x6 7	Back	180			1	33	0.3	NFRC	0.23	NFRC	Bug Screen
Window 5056SL 3	Window	Rear Exterior Wall 2x6 7	Back	180			1	28	0.3	NFRC	0.23	NFRC	Bug Screen
Window 3626FX 3	Window	Rear Exterior Wall 2x6 7	Back	180			1	9	0.3	NFRC	0.23	NFRC	Bug Screen
Window 1 4046SL 3	Window	Front Exterior Wall 2x6 8	Front	0			1	18	0.3	NFRC	0.23	NFRC	Bug Screen
Window 1 2020FX 3	Window	Right Exterior Wall 2x6 7	Right	270			1	4	0.3	NFRC	0.23	NFRC	Bug Screen
(2) Window 1 6046SL 3	Window	Rear Exterior Wall 2x6 8	Back	180			1	54	0.3	NFRC	0.23	NFRC	Bug Screen
Door 1 16080SLD 4	Window	Front Exterior Wall 2x6 9	Front	0	16	8	1	128	0.3	NFRC	0.23	NFRC	Bug Screen
Window 1 8660SL 4	Window	Front Exterior Wall 2x6 9	Front	0			1	51	0.3	NFRC	0.23	NFRC	Bug Screen
Door A1 3080FR 4	Window	Left Exterior Wall 2x6 8	Left	90			1	24	0.3	NFRC	0.23	NFRC	Bug Screen
Window 3056SL 4	Window	Rear Exterior Wall 2x6 9	Back	180			1	17	0.3	NFRC	0.23	NFRC	Bug Screen
Window 6056SL 4	Window	Rear Exterior Wall 2x6 9	Back	180			1	33	0.3	NFRC	0.23	NFRC	Bug Screen
Window 5056SL 4	Window	Rear Exterior Wall 2x6 9	Back	180			1	28	0.3	NFRC	0.23	NFRC	Bug Screen
Window 3626FX 4	Window	Rear Exterior Wall 2x6 9	Back	180			1	9	0.3	NFRC	0.23	NFRC	Bug Screen
Window 1 4046SL 4	Window	Front Exterior Wall 2x6 10	Front	0			1	18	0.3	NFRC	0.23	NFRC	Bug Screen
Window 1 2020FX 4	Window	Right Exterior Wall 2x6 9	Right	270			1	4	0.3	NFRC	0.23	NFRC	Bug Screen
(2) Window 1 6046SL 4	Window	Rear Exterior Wall 2x6 10	Back	180			1	54	0.3	NFRC	0.23	NFRC	Bug Screen
Door 1 16080SLD 5	Window	Front Exterior Wall 2x6 11	Front	0	16	8	1	128	0.3	NFRC	0.23	NFRC	Bug Screen
Window 1 8660SL 5	Window	Front Exterior Wall 2x6 11	Front	0			1	51	0.3	NFRC	0.23	NFRC	Bug Screen
Door A1 3080FR 5	Window	Left Exterior Wall 2x6 10	Left	90			1	24	0.3	NFRC	0.23	NFRC	Bug Screen
Window 3056SL 5	Window	Rear Exterior Wall 2x6 11	Back	180			1	17	0.3	NFRC	0.23	NFRC	Bug Screen

CERTIFICATE OF COMPLIANCE | CF1R-PRF-01E
Project Name: Tenant Square | **Calculation Date/Time:** 2024-01-25T10:21:38-08:00 | (Page 18 of 32)
Calculation Description: Title 24 Analysis | **Input File Name:** 66074 T24 Building A.ribd19x

FENESTRATION / GLAZING

01	02	03	04	05	06	07	08	09	10	11	12	13	14
Name	Type	Surface	Orientation	Azimuth	Width (ft)	Height (ft)	Mult.	Area (ft^2)	U-factor	U-factor Source	SHGC	SHGC Source	Exterior Shading
Window 6056SL 5	Window	Rear Exterior Wall 2x6 11	Back	180			1	33	0.3	NFRC	0.23	NFRC	Bug Screen
Window 5056SL 5	Window	Rear Exterior Wall 2x6 11	Back	180			1	28	0.3	NFRC	0.23	NFRC	Bug Screen
Window 3626FX 5	Window	Rear Exterior Wall 2x6 11	Back	180			1	9	0.3	NFRC	0.23	NFRC	Bug Screen
Window 1 4046SL 5	Window	Front Exterior Wall 2x6 12	Front	0			1	18	0.3	NFRC	0.23	NFRC	Bug Screen
Window 1 2020FX 5	Window	Right Exterior Wall 2x6 11	Right	270			1	4	0.3	NFRC	0.23	NFRC	Bug Screen
(2) Window 1 6046SL 5	Window	Rear Exterior Wall 2x6 12	Back	180			1	54	0.3	NFRC	0.23	NFRC	Bug Screen
Door 1 16080SLD 6	Window	Front Exterior Wall 2x6 13	Front	0	16	8	1	128	0.3	NFRC	0.23	NFRC	Bug Screen
Window 1 8660SL 6	Window	Front Exterior Wall 2x6 13	Front	0			1	51	0.3	NFRC	0.23	NFRC	Bug Screen
Window 3056SL 6	Window	Rear Exterior Wall 2x6 13	Back	180			1	17	0.3	NFRC	0.23	NFRC	Bug Screen
Window 6056SL 6	Window	Rear Exterior Wall 2x6 13	Back	180			1	33	0.3	NFRC	0.23	NFRC	Bug Screen
Window 5056SL 6	Window	Rear Exterior Wall 2x6 13	Back	180			1	28	0.3	NFRC	0.23	NFRC	Bug Screen
Window 3626FX 6	Window	Rear Exterior Wall 2x6 13	Back	180			1	9	0.3	NFRC	0.23	NFRC	Bug Screen
Door A1 3080FR 6	Window	Left Exterior Wall 2x6 12	Left	90			1	24	0.3	NFRC	0.23	NFRC	Bug Screen
Window 1 4046SL 6	Window	Front Exterior Wall 2x6 14	Front	0			1	18	0.3	NFRC	0.23	NFRC	Bug Screen
(2) Window 1 6046SL 6	Window	Rear Exterior Wall 2x6 14	Back	180			1	54	0.3	NFRC	0.23	NFRC	Bug Screen
Window 1 2020FX 6	Window	Right Exterior Wall 2x6 12	Right	270			1	4	0.3	NFRC	0.23	NFRC	Bug Screen
(2) Window 6 3060SH 2	Window	Front Exterior Wall 2x6 15	Front	0			1	36	0.3	NFRC	0.23	NFRC	Bug Screen
(2) Window 5 3060FX	Window	Front Exterior Wall 2x6 15	Front	0			1	36	0.3	NFRC	0.23	NFRC	Bug Screen
Window 4 3030FX 2	Window	Front Exterior Wall 2x6 15	Front	0			1	9	0.3	NFRC	0.23	NFRC	Bug Screen
Window 10 8660SL 2	Window	Rear Exterior Wall 2x6 15	Back	180			1	51	0.3	NFRC	0.23	NFRC	Bug Screen
Window 11 6060SL 2	Window	Rear Exterior Wall 2x6 15	Back	180			1	36	0.3	NFRC	0.23	NFRC	Bug Screen
(3) Window 7 2626FX 2	Window	Right Exterior Wall 2x6 13	Right	270			1	19	0.3	NFRC	0.23	NFRC	Bug Screen
(2) Window 8 2626FX 2	Window	Right Exterior Wall 2x6 13	Right	270			1	13	0.3	NFRC	0.23	NFRC	Bug Screen
Window 9 2626FX 2	Window	Right Exterior Wall 2x6 13	Right	270			1	7	0.3	NFRC	0.23	NFRC	Bug Screen
Window 4 3030FX 3	Window	Front Exterior Wall 2x6 16	Front	0			1	9	0.3	NFRC	0.23	NFRC	Bug Screen

Registration Number: 424-P010016621A-000-000-0000000-0000 | Registration Date/Time: 01/29/2024 10:08 | HERS Provider: CHEERS
NOTICE: This document has been generated by California Home Energy Efficiency Rating Services (CHEERS) using information uploaded by third parties not affiliated with or related to CHEERS. Therefore, CHEERS is not responsible for, and cannot guarantee, the accuracy or completeness of the information contained in this document.
CA Building Energy Efficiency Standards - 2019 Residential Compliance | Report Version: 2019.2.000 | Report Generated: 2024-01-25 10:35:41
Schema Version: rev 20200901

CERTIFICATE OF COMPLIANCE | CF1R-PRF-01E
Project Name: Tenant Square | **Calculation Date/Time:** 2024-01-25T10:21:38-08:00 | (Page 19 of 32)
Calculation Description: Title 24 Analysis | **Input File Name:** 66074 T24 Building A.ribd19x

FENESTRATION / GLAZING

01	02	03	04	05	06	07	08	09	10	11	12	13	14
Name	Type	Surface	Orientation	Azimuth	Width (ft)	Height (ft)	Mult.	Area (ft^2)	U-factor	U-factor Source	SHGC	SHGC Source	Exterior Shading
Window 5 3060FX 2	Window	Front Exterior Wall 2x6 16	Front	0			1	18	0.3	NFRC	0.23	NFRC	Bug Screen
Door 2 6080SLD	Window	Rear Exterior Wall 2x6 16	Back	180			1	48	0.3	NFRC	0.23	NFRC	Bug Screen
Window 3 4046SL	Window	Rear Exterior Wall 2x6 16	Back	180			1	18	0.3	NFRC	0.23	NFRC	Bug Screen
Window 1 8650SL 2	Window	Right Exterior Wall 2x6 14	Right	270			1	43	0.3	NFRC	0.23	NFRC	Bug Screen

OPAQUE DOORS

01	02	03	04
Name	Side of Building	Area (ft^2)	U-factor
Door A1 3080SC	Left Exterior Wall 2x6 2	24	0.2
Door A1 3080SCDR	Right Exterior Wall 2x6 3	24	0.2
Door A1 3080SCDR 2	Right Exterior Wall 2x6 5	24	0.2
Door A1 3080SCDR 3	Right Exterior Wall 2x6 7	24	0.2
Door A1 3080SCDR 4	Right Exterior Wall 2x6 9	24	0.2
Door A1 3080SCDR 5	Right Exterior Wall 2x6 11	24	0.2
Door A1 3080SCDR 6	Right Exterior Wall 2x6 12	24	0.2
Door A1 3080SC 2	Right Exterior Wall 2x6 14	24	0.2

OVERHANGS AND FINS

01	02	03	04	05	06	07	08	09	10	11	12	13	14
Window	Overhang					Left Fin				Right Fin			
	Depth	Dist Up	Left Extent	Right Extent	Flap Ht.	Depth	Top Up	Dist L	Bot Up	Depth	Top Up	Dist R	Bot Up
Door 1 16080SLD	19	1.3	1.55	1.42	0	0	0	0	0	0	0	0	0
Door 1 16080SLD 2	19	1.3	1.55	1.42	0	0	0	0	0	0	0	0	0

Registration Number: 424-P010016621A-000-000-0000000-0000 | Registration Date/Time: 01/29/2024 10:08 | HERS Provider: CHEERS
NOTICE: This document has been generated by California Home Energy Efficiency Rating Services (CHEERS) using information uploaded by third parties not affiliated with or related to CHEERS. Therefore, CHEERS is not responsible for, and cannot guarantee, the accuracy or completeness of the information contained in this document.
CA Building Energy Efficiency Standards - 2019 Residential Compliance | Report Version: 2019.2.000 | Report Generated: 2024-01-25 10:35:41
Schema Version: rev 20200901

CERTIFICATE OF COMPLIANCE | CF1R-PRF-01E
Project Name: Tenant Square | **Calculation Date/Time:** 2024-01-25T10:21:38-08:00 | (Page 20 of 32)
Calculation Description: Title 24 Analysis | **Input File Name:** 66074 T24 Building A.ribd19x

OVERHANGS AND FINS

01	02	03	04	05	06	07	08	09	10	11	12	13	14
Window	Overhang					Left Fin				Right Fin			
	Depth	Dist Up	Left Extent	Right Extent	Flap Ht.	Depth	Top Up	Dist L	Bot Up	Depth	Top Up	Dist R	Bot Up
Door 1 16080SLD 3	19	1.3	1.55	1.42	0	0	0	0	0	0	0	0	0
Door 1 16080SLD 4	19	1.3	1.55	1.42	0	0	0	0	0	0	0	0	0
Door 1 16080SLD 5	19	1.3	1.55	1.42	0	0	0	0	0	0	0	0	0
Door 1 16080SLD 6	19	1.3	1.55	1.42	0	0	0	0	0	0	0	0	0

SLAB FLOORS

01	02	03	04	05	06	07	08
Name	Zone	Area (ft^2)	Perimeter (ft)	Edge Insul. R-value and Depth	Edge Insul. R-value and Depth	Carpeted Fraction	Heated
Slab-on-Grade	Unit A	632	86	none	0	80%	No
Slab-on-Grade 2	Unit B	584	89	none	0	80%	No
Slab-on-Grade 3	Unit B1	584	89	none	0	80%	No
Slab-on-Grade 4	Unit B2	584	89	none	0	80%	No
Slab-on-Grade 5	Unit B3	584	89	none	0	80%	No
Slab-on-Grade 6	Unit B4	584	89	none	0	80%	No
Slab-on-Grade 7	Unit B5	584	89	none	0	80%	No
Slab-on-Grade 8	Unit A - ADU	564	78	none	0	80%	No
Slab-on-Grade 9	__Garage__	271	27	none	0	0%	No
Slab-on-Grade 10	__Garage__	252	48	none	0	0%	No

Registration Number: 424-P010016621A-000-000-0000000-0000 | Registration Date/Time: 01/29/2024 10:08 | HERS Provider: CHEERS
NOTICE: This document has been generated by California Home Energy Efficiency Rating Services (CHEERS) using information uploaded by third parties not affiliated with or related to CHEERS. Therefore, CHEERS is not responsible for, and cannot guarantee, the accuracy or completeness of the information contained in this document.
CA Building Energy Efficiency Standards - 2019 Residential Compliance | Report Version: 2019.2.000 | Report Generated: 2024-01-25 10:35:41
Schema Version: rev 20200901

CERTIFICATE OF COMPLIANCE | CF1R-PRF-01E
Project Name: Tenant Square | **Calculation Date/Time:** 2024-01-25T10:21:38-08:00 | (Page 21 of 32)
Calculation Description: Title 24 Analysis | **Input File Name:** 66074 T24 Building A.ribd19x

SLAB FLOORS

01	02	03	04	05	06	07	08
Name	Zone	Area (ft^2)	Perimeter (ft)	Edge Insul. R-value and Depth	Edge Insul. R-value and Depth	Carpeted Fraction	Heated
Slab-on-Grade 11	__Garage__	252	48	none	0	0%	No
Slab-on-Grade 12	__Garage__	252	48	none	0	0%	No
Slab-on-Grade 13	__Garage__	252	48	none	0	0%	No
Slab-on-Grade 14	__Garage__	252	48	none	0	0%	No
Slab-on-Grade 15	__Garage__	252	48	none	0	0%	No
Slab-on-Grade 16	__Garage__	339	35	none	0	0%	No

OPAQUE SURFACE CONSTRUCTIONS

01	02	03	04	05	06	07	08
Construction Name	Surface Type	Construction Type	Framing	Total Cavity R-value	Interior / Exterior Continuous R-value	U-factor	Assembly Layers
R-0 Wall	Exterior Walls	Wood Framed Wall	2x4 @ 16 in. O. C.	R-0	None / None	0.361	Inside Finish: Gypsum Board Cavity / Frame: no insul. / 2x4 Exterior Finish: 3 Coat Stucco
R-21 Wall + R4	Exterior Walls	Wood Framed Wall	2x6 @ 16 in. O. C.	R-21	None / R-4	0.051	Inside Finish: Gypsum Board Cavity / Frame: R-21 / 2x6 Sheathing / Insulation: R-4 Sheathing Exterior Finish: 3 Coat Stucco
R-30 Roof Cathedral	Cathedral Ceilings	Wood Framed Ceiling	2x12 @ 16 in. O. C.	R-0	R-30 / None	0.03	Roofing: Light Roof (Asphalt Shingle) Roof Deck: Wood Siding/sheathing/decking Cavity / Frame: no insul. / 2x12 Sheathing / Insulation: R-30 Sheathing Inside Finish: Gypsum Board

Registration Number: 424-P010016621A-000-000-0000000-0000 | Registration Date/Time: 01/29/2024 10:08 | HERS Provider: CHEERS
NOTICE: This document has been generated by California Home Energy Efficiency Rating Services (CHEERS) using information uploaded by third parties not affiliated with or related to CHEERS. Therefore, CHEERS is not responsible for, and cannot guarantee, the accuracy or completeness of the information contained in this document.
CA Building Energy Efficiency Standards - 2019 Residential Compliance | Report Version: 2019.2.000 | Report Generated: 2024-01-25 10:35:41
Schema Version: rev 20200901

CERTIFICATE OF COMPLIANCE | CF1R-PRF-01E
Project Name: Tenant Square | **Calculation Date/Time:** 2024-01-25T10:21:38-08:00 | (Page 22 of 32)
Calculation Description: Title 24 Analysis | **Input File Name:** 66074 T24 Building A.ribd19x

OPAQUE SURFACE CONSTRUCTIONS

01	02	03	04	05	06	07	08
Construction Name	Surface Type	Construction Type	Framing	Total Cavity R-value	Interior / Exterior Continuous R-value	U-factor	Assembly Layers
R-30 Ceiling W/ Deck Abov	Cathedral Ceilings	Wood Framed Ceiling	2x12 @ 16 in. O. C.	R-30	None / None	0.036	Roofing: Light Roof (Asphalt Shingle) Roof Deck: Wood Siding/sheathing/decking Cavity / Frame: R-30 / 2x12 Inside Finish: Gypsum Board
R-15 Garage Fire Wall	Interior Walls	Wood Framed Wall	2x4 @ 16 in. O. C.	R-15	None / None	0.086	Inside Finish: Gypsum Board Cavity / Frame: R-15 / 2x4 Other Side Finish: Gypsum Board
R-0 Wall1	Interior Walls	Wood Framed Wall	2x4 @ 16 in. O. C.	R-0	None / None	0.277	Inside Finish: Gypsum Board Cavity / Frame: no insul. / 2x4 Other Side Finish: Gypsum Board
R-21 Garage Fire Wall	Interior Walls	Wood Framed Wall	2x4 @ 16 in. O. C.	R-21	None / None	0.075	Inside Finish: Gypsum Board Cavity / Frame: R-21 / 2x4 Other Side Finish: Gypsum Board
R-30 Floor No Crawl Space	Exterior Floors	Wood Framed Floor	2x10 @ 16 in. O. C.	R-30	None / None	0.034	Floor Surface: Carpeted Floor Deck: Wood Siding/sheathing/decking Cavity / Frame: R-30 / 2x10
R-0 Floor Over Living Spa	Interior Floors	Wood Framed Floor	2x12 @ 16 in. O. C.	R-0	None / None	0.196	Floor Surface: Carpeted Floor Deck: Wood Siding/sheathing/decking Cavity / Frame: no insul. / 2x12 Ceiling Below Finish: Gypsum Board
R-30 Floor Over Garage	Interior Floors	Wood Framed Floor	2x12 @ 16 in. O. C.	R-30	None / None	0.032	Floor Surface: Carpeted Floor Deck: Wood Siding/sheathing/decking Cavity / Frame: R-30 / 2x12 Ceiling Below Finish: Gypsum Board

Registration Number: 424-P010016621A-000-000-0000000-0000 | Registration Date/Time: 01/29/2024 10:08 | HERS Provider: CHEERS
NOTICE: This document has been generated by California Home Energy Efficiency Rating Services (CHEERS) using information uploaded by third parties not affiliated with or related to CHEERS. Therefore, CHEERS is not responsible for, and cannot guarantee, the accuracy or completeness of the information contained in this document.
CA Building Energy Efficiency Standards - 2019 Residential Compliance | Report Version: 2019.2.000 | Report Generated: 2024-01-25 10:35:41
Schema Version: rev 20200901

CERTIFICATE OF COMPLIANCE | CF1R-PRF-01E
Project Name: Tenant Square | **Calculation Date/Time:** 2024-01-25T10:21:38-08:00 | (Page 23 of 32)
Calculation Description: Title 24 Analysis | **Input File Name:** 66074 T24 Building A.ribd19x

BUILDING ENVELOPE - HERS VERIFICATION

01	02	03	04
Quality Insulation Installation (QII)	High R-value Spray Foam Insulation	Building Envelope Air Leakage	CFM50
Required	Not Required	Not Required	n/a

WATER HEATING SYSTEMS

01	02	03	04	05	06	07	08	09
Name	System Type	Number of Systems in Building	Multi-Family Distribution Type	Dwelling Unit Distribution Type	Water Heater Name (#)	Solar Heating System	Compact Distribution	HERS Verification
DHW Sys 1	Domestic Hot Water (DHW)	8	n/a	Standard Distribution System	DHW Heater 1 (1)	n/a	None	n/a

WATER HEATERS

01	02	03	04	05	06	07	08	09	10	11	12
Name	Heating Element Type	Tank Type	# of Units	Tank Vol. (gal)	Energy Factor or Efficiency	Input Rating or Pilot	Tank Insulation R-value (Int/Ext)	Standby Loss or Recovery Eff	1st Hr. Rating or Flow Rate	NEEA Heat Pump Brand or Model	Tank Location or Ambient Condition
DHW Heater 1	Heat Pump	n/a	8	80	NEEA Rated	<= 12 kW	n/a	n/a	n/a	Ruud\PROUH80 T2 RU37530 (80 gal)	Garage

WATER HEATING - HERS VERIFICATION

01	02	03	04	05	06	07	08
Name	Pipe Insulation	Parallel Piping	Compact Distribution	Compact Distribution Type	Recirculation Control	Central DHW Distribution	Shower Drain Water Heat Recovery
DDU-1 Unit A | DHW Sys 1	Not Required	Not Required	Not Required	None	Not Required	Not Required	Not Required
DDU-2 Unit B | DHW Sys 1	Not Required	Not Required	Not Required	None	Not Required	Not Required	Not Required

Registration Number: 424-P010016621A-000-000-0000000-0000 | Registration Date/Time: 01/29/2024 10:08 | HERS Provider: CHEERS
NOTICE: This document has been generated by California Home Energy Efficiency Rating Services (CHEERS) using information uploaded by third parties not affiliated with or related to CHEERS. Therefore, CHEERS is not responsible for, and cannot guarantee, the accuracy or completeness of the information contained in this document.
CA Building Energy Efficiency Standards - 2019 Residential Compliance | Report Version: 2019.2.000 | Report Generated: 2024-01-25 10:35:41
Schema Version: rev 20200901

CERTIFICATE OF COMPLIANCE | CF1R-PRF-01E
Project Name: Tenant Square | **Calculation Date/Time:** 2024-01-25T10:21:38-08:00 | (Page 24 of 32)
Calculation Description: Title 24 Analysis | **Input File Name:** 66074 T24 Building A.ribd19x

WATER HEATING - HERS VERIFICATION

01	02	03	04	05	06	07	08
Name	Pipe Insulation	Parallel Piping	Compact Distribution	Compact Distribution Type	Recirculation Control	Central DHW Distribution	Shower Drain Water Heat Recovery
DDU-3 Unit B | DHW Sys 1	Not Required	Not Required	Not Required	None	Not Required	Not Required	Not Required
DDU-4 Unit B | DHW Sys 1	Not Required	Not Required	Not Required	None	Not Required	Not Required	Not Required
DDU-5 Unit B | DHW Sys 1	Not Required	Not Required	Not Required	None	Not Required	Not Required	Not Required
DDU-6 Unit B | DHW Sys 1	Not Required	Not Required	Not Required	None	Not Required	Not Required	Not Required
DDU-7 Unit B | DHW Sys 1	Not Required	Not Required	Not Required	None	Not Required	Not Required	Not Required
DDU-8 Unit A (R) | DHW Sys 1	Not Required	Not Required	Not Required	None	Not Required	Not Required	Not Required

SPACE CONDITIONING SYSTEMS

01	02	03	04	05	06	07	08	09	10	11
Name	System Type	Heating Unit Name	Cooling Unit Name	Fan Name	Distribution Name	Required Thermostat Type	Status	Verified Existing Condition	Heating Equipment Count	Cooling Equipment Count
DDU-1 Unit A | :Heat Pump System 1:Air Distribution System 1:HVAC Fan 1:2:3	Heat pump heating cooling	Heat Pump System 1	Heat Pump System 1	HVAC Fan 1	Air Distribution System 1	Setback	New	NA	1	1
DDU-2 Unit B | :Heat Pump System 2:Air Distribution System 2:HVAC Fan 2:2:3	Heat pump heating cooling	Heat Pump System 2	Heat Pump System 2	HVAC Fan 2	Air Distribution System 2	Setback	New	NA	1	1
DDU-3 Unit B | :Heat Pump System 3:Air Distribution System 3:HVAC Fan 3:2:3	Heat pump heating cooling	Heat Pump System 3	Heat Pump System 3	HVAC Fan 3	Air Distribution System 3	Setback	New	NA	1	1

Registration Number: 424-P010016621A-000-000-0000000-0000 | Registration Date/Time: 01/29/2024 10:08 | HERS Provider: CHEERS
NOTICE: This document has been generated by California Home Energy Efficiency Rating Services (CHEERS) using information uploaded by third parties not affiliated with or related to CHEERS. Therefore, CHEERS is not responsible for, and cannot guarantee, the accuracy or completeness of the information contained in this document.
CA Building Energy Efficiency Standards - 2019 Residential Compliance | Report Version: 2019.2.000 | Report Generated: 2024-01-25 10:35:41
Schema Version: rev 20200901

CERTIFICATE OF COMPLIANCE | CF1R-PRF-01E
Project Name: Tenant Square | **Calculation Date/Time:** 2024-01-25T10:21:38-08:00 | (Page 25 of 32)
Calculation Description: Title 24 Analysis | **Input File Name:** 66074 T24 Building A.ribd19x

SPACE CONDITIONING SYSTEMS

01	02	03	04	05	06	07	08	09	10	11
Name	System Type	Heating Unit Name	Cooling Unit Name	Fan Name	Distribution Name	Required Thermostat Type	Status	Verified Existing Condition	Heating Equipment Count	Cooling Equipment Count
DDU-4 Unit B | :Heat Pump System 4:Air Distribution System 4:HVAC Fan 4:2:3	Heat pump heating cooling	Heat Pump System 4	Heat Pump System 4	HVAC Fan 4	Air Distribution System 4	Setback	New	NA	1	1
DDU-5 Unit B | :Heat Pump System 5:Air Distribution System 5:HVAC Fan 5:2:3	Heat pump heating cooling	Heat Pump System 5	Heat Pump System 5	HVAC Fan 5	Air Distribution System 5	Setback	New	NA	1	1
DDU-6 Unit B | :Heat Pump System 6:Air Distribution System 6:HVAC Fan 6:2:3	Heat pump heating cooling	Heat Pump System 6	Heat Pump System 6	HVAC Fan 6	Air Distribution System 6	Setback	New	NA	1	1
DDU-7 Unit B | :Heat Pump System 7:Air Distribution System 7:HVAC Fan 7:2:3	Heat pump heating cooling	Heat Pump System 7	Heat Pump System 7	HVAC Fan 7	Air Distribution System 7	Setback	New	NA	1	1
DDU-8 Unit A (R) | :Heat Pump System 8:Air Distribution System 8:HVAC Fan 8:2:3	Heat pump heating cooling	Heat Pump System 8	Heat Pump System 8	HVAC Fan 8	Air Distribution System 8	Setback	New	NA	1	1

HVAC - HEAT PUMPS

01	02	03	04	05	06	07	08	09	10	11
Name	System Type	Number of Units	Heating			Cooling		Zonally Controlled	Compressor Type	HERS Verification
			HSPF/HSPF2 /COP	Cap 47	Cap 17	SEER/SEER2	EER/EER2/CEER			
Heat Pump System 1	Central split HP	1	11.3	38000	22800	17	8.8	Not Zonal	Single Speed	Heat Pump System 1-hers-htpump
Heat Pump System 2	Central split HP	1	11.3	38000	22800	17	8.8	Not Zonal	Single Speed	Heat Pump System 2-hers-htpump

3

Registration Number: 424-P010016621A-000-000-0000000-0000 | Registration Date/Time: 01/29/2024 10:08 | HERS Provider: CHEERS
NOTICE: This document has been generated by California Home Energy Efficiency Rating Services (CHEERS) using information uploaded by third parties not affiliated with or related to CHEERS. Therefore, CHEERS is not responsible for, and cannot guarantee, the accuracy or completeness of the information contained in this document.
CA Building Energy Efficiency Standards - 2019 Residential Compliance | Report Version: 2019.2.000 | Report Generated: 2024-01-25 10:35:41
Schema Version: rev 20200901

CERTIFICATE OF COMPLIANCE | CF1R-PRF-01E
Project Name: Tenant Square | **Calculation Date/Time:** 2024-01-25T10:21:38-08:00 | (Page 26 of 32)
Calculation Description: Title 24 Analysis | **Input File Name:** 66074 T24 Building A.ribd19x

HVAC - HEAT PUMPS

01	02	03	04	05	06	07	08	09	10	11
Name	System Type	Number of Units	Heating			Cooling		Zonally Controlled	Compressor Type	HERS Verification
			HSPF/HSPF2 /COP	Cap 47	Cap 17	SEER/SEER2	EER/EER2/CEER			
Heat Pump System 3	Central split HP	1	11.3	38000	22800	17	8.8	Not Zonal	Single Speed	Heat Pump System 3-hers-htpump
Heat Pump System 4	Central split HP	1	11.3	38000	22800	17	8.8	Not Zonal	Single Speed	Heat Pump System 4-hers-htpump
Heat Pump System 5	Central split HP	1	11.3	38000	22800	17	8.8	Not Zonal	Single Speed	Heat Pump System 5-hers-htpump
Heat Pump System 6	Central split HP	1	11.3	38000	22800	17	8.8	Not Zonal	Single Speed	Heat Pump System 6-hers-htpump
Heat Pump System 7	Central split HP	1	11.3	38000	22800	17	8.8	Not Zonal	Single Speed	Heat Pump System 7-hers-htpump
Heat Pump System 8	Central split HP	1	11.3	38000	22800	17	8.8	Not Zonal	Single Speed	Heat Pump System 8-hers-htpump

3

HVAC HEAT PUMPS - HERS VERIFICATION

01	02	03	04	05	06	07	08	09
Name	Verified Airflow	Airflow Target	Verified EER	Verified SEER	Verified Refrigerant Charge	Verified HSPF	Verified Heating Cap 47	Verified Heating Cap 17
Heat Pump System 1-hers-htpump	Required	350	Not Required	Required	Yes	Yes	Yes	Yes
Heat Pump System 2-hers-htpump	Required	350	Not Required	Required	Yes	Yes	Yes	Yes
Heat Pump System 3-hers-htpump	Required	350	Not Required	Required	Yes	Yes	Yes	Yes
Heat Pump System 4-hers-htpump	Required	350	Not Required	Required	Yes	Yes	Yes	Yes

Registration Number: 424-P010016621A-000-000-0000000-0000 | Registration Date/Time: 01/29/2024 10:08 | HERS Provider: CHEERS
NOTICE: This document has been generated by California Home Energy Efficiency Rating Services (CHEERS) using information uploaded by third parties not affiliated with or related to CHEERS. Therefore, CHEERS is not responsible for, and cannot guarantee, the accuracy or completeness of the information contained in this document.
CA Building Energy Efficiency Standards - 2019 Residential Compliance | Report Version: 2019.2.000 | Report Generated: 2024-01-25 10:35:41
Schema Version: rev 20200901

CERTIFICATE OF COMPLIANCE | CF1R-PRF-01E
Project Name: Tenant Square | **Calculation Date/Time:** 2024-01-25T10:21:38-08:00 | (Page 27 of 32)
Calculation Description: Title 24 Analysis | **Input File Name:** 66074 T24 Building A.ribd19x

HVAC HEAT PUMPS - HERS VERIFICATION

01	02	03	04	05	06	07	08	09
Name	Verified Airflow	Airflow Target	Verified EER	Verified SEER	Verified Refrigerant Charge	Verified HSPF	Verified Heating Cap 47	Verified Heating Cap 17
Heat Pump System 5-hers-htpump	Required	350	Not Required	Required	Yes	Yes	Yes	Yes
Heat Pump System 6-hers-htpump	Required	350	Not Required	Required	Yes	Yes	Yes	Yes
Heat Pump System 7-hers-htpump	Required	350	Not Required	Required	Yes	Yes	Yes	Yes
Heat Pump System 8-hers-htpump	Required	350	Not Required	Required	Yes	Yes	Yes	Yes

HVAC - DISTRIBUTION SYSTEMS

01	02	03	04	05	06	07	08	09	10	11	12
			Duct Ins. R-value		Duct Location		Surface Area				
Name	Type	Design Type	Supply	Return	Supply	Return	Supply	Return	Bypass Duct	Duct Leakage	HERS Verification
Air Distribution System 1	Conditioned space-entirely	Non-Verified	R-6	R-6	Conditioned Zone	Conditioned Zone	n/a	n/a	No Bypass Duct		Air Distribution System 1-hers-dist
Air Distribution System 2	Conditioned space-entirely	Non-Verified	R-6	R-6	Conditioned Zone	Conditioned Zone	n/a	n/a	No Bypass Duct		Air Distribution System 2-hers-dist
Air Distribution System 3	Conditioned space-entirely	Non-Verified	R-6	R-6	Conditioned Zone	Conditioned Zone	n/a	n/a	No Bypass Duct		Air Distribution System 3-hers-dist
Air Distribution System 4	Conditioned space-entirely	Non-Verified	R-6	R-6	Conditioned Zone	Conditioned Zone	n/a	n/a	No Bypass Duct		Air Distribution System 4-hers-dist

Registration Number: 424-P010016621A-000-000-0000000-0000 | Registration Date/Time: 01/29/2024 10:08 | HERS Provider: CHEERS
NOTICE: This document has been generated by California Home Energy Efficiency Rating Services (CHEERS) using information uploaded by third parties not affiliated with or related to CHEERS. Therefore, CHEERS is not responsible for, and cannot guarantee, the accuracy or completeness of the information contained in this document.
CA Building Energy Efficiency Standards - 2019 Residential Compliance | Report Version: 2019.2.000 | Report Generated: 2024-01-25 10:35:41
Schema Version: rev 20200901

CERTIFICATE OF COMPLIANCE | CF1R-PRF-01E
Project Name: Tenant Square | **Calculation Date/Time:** 2024-01-25T10:21:38-08:00 | (Page 28 of 32)
Calculation Description: Title 24 Analysis | **Input File Name:** 66074 T24 Building A.ribd19x

HVAC - DISTRIBUTION SYSTEMS

01	02	03	04	05	06	07	08	09	10	11	12
			Duct Ins. R-value		Duct Location		Surface Area				
Name	Type	Design Type	Supply	Return	Supply	Return	Supply	Return	Bypass Duct	Duct Leakage	HERS Verification
Air Distribution System 5	Conditioned space-entirely	Non-Verified	R-6	R-6	Conditioned Zone	Conditioned Zone	n/a	n/a	No Bypass Duct		Air Distribution System 5-hers-dist
Air Distribution System 6	Conditioned space-entirely	Non-Verified	R-6	R-6	Conditioned Zone	Conditioned Zone	n/a	n/a	No Bypass Duct		Air Distribution System 6-hers-dist
Air Distribution System 7	Conditioned space-entirely	Non-Verified	R-6	R-6	Conditioned Zone	Conditioned Zone	n/a	n/a	No Bypass Duct		Air Distribution System 7-hers-dist
Air Distribution System 8	Conditioned space-entirely	Non-Verified	R-6	R-6	Conditioned Zone	Conditioned Zone	n/a	n/a	No Bypass Duct		Air Distribution System 8-hers-dist

HVAC DISTRIBUTION - HERS VERIFICATION

01	02	03	04	05	06	07	08	09
Name	Duct Leakage Verification	Duct Leakage Target (%)	Verified Duct Location	Verified Duct Design	Buried Ducts	Deeply Buried Ducts	Low-leakage Air Handler	Low Leakage Ducts Entirely in Conditioned Space
Air Distribution System 1-hers-dist	Yes	5.0	Required	Not Required	Not Required	Credit not taken	Required	No
Air Distribution System 2-hers-dist	Yes	5.0	Required	Not Required	Not Required	Credit not taken	Required	No

Registration Number: 424-P010016621A-000-000-0000000-0000 | Registration Date/Time: 01/29/2024 10:08 | HERS Provider: CHEERS
NOTICE: This document has been generated by California Home Energy Efficiency Rating Services (CHEERS) using information uploaded by third parties not affiliated with or related to CHEERS. Therefore, CHEERS is not responsible for, and cannot guarantee, the accuracy or completeness of the information contained in this document.
CA Building Energy Efficiency Standards - 2019 Residential Compliance | Report Version: 2019.2.000 | Report Generated: 2024-01-25 10:35:41
Schema Version: rev 20200901

CERTIFICATE OF COMPLIANCE | CF1R-PRF-01E
Project Name: Tenant Square | **Calculation Date/Time:** 2024-01-25T10:21:38-08:00 | (Page 29 of 32)
Calculation Description: Title 24 Analysis | **Input File Name:** 66074 T24 Building A.ribd19x

HVAC DISTRIBUTION - HERS VERIFICATION

01	02	03	04	05	06	07	08	09
Name	Duct Leakage Verification	Duct Leakage Target (%)	Verified Duct Location	Verified Duct Design	Buried Ducts	Deeply Buried Ducts	Low-leakage Air Handler	Low Leakage Ducts Entirely in Conditioned Space
Air Distribution System 3-hers-dist	Yes	5.0	Required	Not Required	Not Required	Credit not taken	Required	No
Air Distribution System 4-hers-dist	Yes	5.0	Required	Not Required	Not Required	Credit not taken	Required	No
Air Distribution System 5-hers-dist	Yes	5.0	Required	Not Required	Not Required	Credit not taken	Required	No
Air Distribution System 6-hers-dist	Yes	5.0	Required	Not Required	Not Required	Credit not taken	Required	No
Air Distribution System 7-hers-dist	Yes	5.0	Required	Not Required	Not Required	Credit not taken	Required	No
Air Distribution System 8-hers-dist	Yes	5.0	Required	Not Required	Not Required	Credit not taken	Required	No

HVAC - FAN SYSTEMS

01	02	03	04
Name	Type	Fan Power (Watts/CFM)	Name
HVAC Fan 1	HVAC Fan	0.5	HVAC Fan 1-hers-fan
HVAC Fan 2	HVAC Fan	0.45	HVAC Fan 2-hers-fan
HVAC Fan 3	HVAC Fan	0.45	HVAC Fan 3-hers-fan
HVAC Fan 4	HVAC Fan	0.45	HVAC Fan 4-hers-fan
HVAC Fan 5	HVAC Fan	0.45	HVAC Fan 5-hers-fan

Registration Number: 424-P010016621A-000-000-0000000-0000 | Registration Date/Time: 01/29/2024 10:08 | HERS Provider: CHEERS
NOTICE: This document has been generated by California Home Energy Efficiency Rating Services (CHEERS) using information uploaded by third parties not affiliated with or related to CHEERS. Therefore, CHEERS is not responsible for, and cannot guarantee, the accuracy or completeness of the information contained in this document.
CA Building Energy Efficiency Standards - 2019 Residential Compliance | Report Version: 2019.2.000 | Report Generated: 2024-01-25 10:35:41
Schema Version: rev 20200901

CERTIFICATE OF COMPLIANCE | CF1R-PRF-01E
Project Name: Tenant Square | **Calculation Date/Time:** 2024-01-25T10:21:38-08:00 | (Page 30 of 32)
Calculation Description: Title 24 Analysis | **Input File Name:** 66074 T24 Building A.ribd19x

HVAC - FAN SYSTEMS

01	02	03	04
Name	Type	Fan Power (Watts/CFM)	Name
HVAC Fan 6	HVAC Fan	0.45	HVAC Fan 6-hers-fan
HVAC Fan 7	HVAC Fan	0.45	HVAC Fan 7-hers-fan
HVAC Fan 8	HVAC Fan	0.45	HVAC Fan 8-hers-fan

HVAC FAN SYSTEMS - HERS VERIFICATION

01	02	03
Name	Verified Fan Watt Draw	Required Fan Efficacy (Watts/CFM)
HVAC Fan 1-hers-fan	Required	0.5
HVAC Fan 2-hers-fan	Required	0.45
HVAC Fan 3-hers-fan	Required	0.45
HVAC Fan 4-hers-fan	Required	0.45
HVAC Fan 5-hers-fan	Required	0.45
HVAC Fan 6-hers-fan	Required	0.45
HVAC Fan 7-hers-fan	Required	0.45
HVAC Fan 8-hers-fan	Required	0.45

IAQ (INDOOR AIR QUALITY) FANS

01	02	03	04	05	06	07
Dwelling Unit	IAQ CFM	IAQ Watts/CFM	IAQ Fan Type	IAQ Recovery Effectiveness - SRE	IAQ Recovery Effectiveness - ASRE	HERS Verification
DDU-1 Unit A 1/1	76	0.35	Exhaust	n/a	n/a	Yes
DDU-2 Unit B 1/1	76	0.35	Exhaust	n/a	n/a	Yes
DDU-3 Unit B 1/1	76	0.35	Exhaust	n/a	n/a	Yes
DDU-4 Unit B 1/1	76	0.35	Exhaust	n/a	n/a	Yes

Registration Number: 424-P010016621A-000-000-0000000-0000 | Registration Date/Time: 01/29/2024 10:08 | HERS Provider: CHEERS
NOTICE: This document has been generated by California Home Energy Efficiency Rating Services (CHEERS) using information uploaded by third parties not affiliated with or related to CHEERS. Therefore, CHEERS is not responsible for, and cannot guarantee, the accuracy or completeness of the information contained in this document.
CA Building Energy Efficiency Standards - 2019 Residential Compliance | Report Version: 2019.2.000 | Report Generated: 2024-01-25 10:35:41
Schema Version: rev 20200901

CERTIFICATE OF COMPLIANCE | CF1R-PRF-01E
Project Name: Tenant Square | **Calculation Date/Time:** 2024-01-25T10:21:38-08:00 | (Page 31 of 32)
Calculation Description: Title 24 Analysis | **Input File Name:** 66074 T24 Building A.ribd19x

IAQ (INDOOR AIR QUALITY) FANS

01	02	03	04	05	06	07
Dwelling Unit	IAQ CFM	IAQ Watts/CFM	IAQ Fan Type	IAQ Recovery Effectiveness - SRE	IAQ Recovery Effectiveness - ASRE	HERS Verification
DDU-5 Unit B 1/1	76	0.35	Exhaust	n/a	n/a	Yes
DDU-6 Unit B 1/1	76	0.35	Exhaust	n/a	n/a	Yes
DDU-7 Unit B 1/1	76	0.35	Exhaust	n/a	n/a	Yes
DDU-8 Unit A (R) 1/1	75	0.35	Exhaust	n/a	n/a	Yes

Registration Number: 424-P010016621A-000-000-0000000-0000 | Registration Date/Time: 01/29/2024 10:08 | HERS Provider: CHEERS
NOTICE: This document has been generated by California Home Energy Efficiency Rating Services (CHEERS) using information uploaded by third parties not affiliated with or related to CHEERS. Therefore, CHEERS is not responsible for, and cannot guarantee, the accuracy or completeness of the information contained in this document.
CA Building Energy Efficiency Standards - 2019 Residential Compliance | Report Version: 2019.2.000 | Report Generated: 2024-01-25 10:35:41
Schema Version: rev 20200901

CERTIFICATE OF COMPLIANCE | CF1R-PRF-01E
Project Name: Tenant Square | **Calculation Date/Time:** 2024-01-25T10:21:38-08:00 | (Page 32 of 32)
Calculation Description: Title 24 Analysis | **Input File Name:** 66074 T24 Building A.ribd19x

DOCUMENTATION AUTHOR'S DECLARATION STATEMENT

1. I certify that this Certificate of Compliance documentation is accurate and complete.

Documentation Author Name: Ken La	Documentation Author Signature: *Ken La*
Company: Gouvis Engineering Consulting Group	Signature Date: 01/29/2024
Address: 15 Studebaker	CEA/ HERS Certification Identification (If applicable): RCN14265
City/State/Zip: Irvine, CA 92618	Phone: 949-752-1612

RESPONSIBLE PERSON'S DECLARATION STATEMENT

I certify the following under penalty of perjury, under the laws of the State of California:

1. I am eligible under Division 3 of the Business and Professions Code to accept responsibility for the building design identified on this Certificate of Compliance.
2. I certify that the energy features and performance specifications identified on this Certificate of Compliance conform to the requirements of Title 24, Part 1 and Part 6 of the California Code of Regulations.
3. The building design features or system design features identified on this Certificate of Compliance are consistent with the information provided on other applicable compliance documents, worksheets, calculations, plans and specifications submitted to the enforcement agency for approval with this building permit application.

Responsible Designer Name: David Halvorsen	Responsible Designer Signature: *David Halvorsen*
Company: Homeowner - David Halvorsen	Date Signed: 01/29/2024
Address: 3435 E Huber Cir	License:
City/State/Zip: Mesa, AZ 85213	Phone: 4806466323

Digitally signed by California Home Energy Efficiency Rating Services (CHEERS). This digital signature is provided in order to secure the content of this registered document, and in no way implies Registration Provider responsibility for the accuracy of the information.

Registration Number: 424-P010016621A-000-000-0000000-0000 | Registration Date/Time: 01/29/2024 10:08 | HERS Provider: CHEERS
NOTICE: This document has been generated by California Home Energy Efficiency Rating Services (CHEERS) using information uploaded by third parties not affiliated with or related to CHEERS. Therefore, CHEERS is not responsible for, and cannot guarantee, the accuracy or completeness of the information contained in this document.
CA Building Energy Efficiency Standards - 2019 Residential Compliance | Report Version: 2019.2.000 | Report Generated: 2024-01-25 10:35:41
Schema Version: rev 20200901

GOUVIS engineering consulting group, inc.®

15 Studebaker
Irvine
CA 92618

Irvine
tel 949.752.1612
fax 949.752.5321

Palm Springs
tel 760.323.5090

REGISTERED PROFESSIONAL ENGINEER
RADE BABIC
No. M 38573
Exp. 09-30-2023
MECHANICAL
STATE OF CALIFORNIA

DATE SIGNED: 1/29/24

RESTRICTIVE NOTICE

THESE DESIGNS, DRAWINGS, AND SPECIFICATIONS ARE THE EXCLUSIVE PROPERTY OF GOUVIS ENGINEERING CONSULTING GROUP. THEY ARE THE SUBJECTOF COPYRIGHT AND OTHER LEGAL PROTECTION. THEY MAY BE USED ONLY BY THEIR INTENDED RECIPIENT AND ONLY FOR THE PROJECT DEPICTED HEREIN. NO PART OF THESE DRAWINGS ARE TO BE COPIED, TRANSFERRED, REPRODUCED, NOR CAN THEY BE USED, IN WHOLE OR IN PART, BY ANY OTHER PERSON OR FOR ANY OTHER PROJECT OR STRUCTURE, WITHOUT THE PRIOR EXPRESS WRITTEN CONSENT OF GOUVIS ENGINEERING CONSULTING GROUP

© 2017 GOUVIS ENGINEERING CONSULTING GROUP INC. - ALL RIGHTS RESERVED

PROJECT:
Tenant Square

DEVELOPER:
Osito Holdings LLC

ARCHITECT:
Gary Moore & Associates

LOCATION:
Morgan Hill
Santa Clara
CA

REVISIONS

NO.	DATE	DESCRIPTION
1	02/02/23	PLAN CHECK
2	11/01/23	PLAN CHECK
3	01/30/24	FIRE COMMENT

SHEET NAME:
TITLE 24 ENERGY COMPLIANCE FORMS BUILDING A CON'T

PROJECT NUMBER:
66074

ENGINEER:
DRAFTER:

SHEET NUMBER:
T24-2

FENESTRATION / GLAZING

01	02	03	04	05	06	07	08	09	10	11	12	13	14
Name	Type	Surface	Orientation	Azimuth	Width (ft)	Height (ft)	Mult.	Area (ft^2)	U-factor	U-factor Source	SHGC	SHGC Source	Exterior Shading
(2) Window 1 6046SL 2	Window	Rear Exterior Wall 2x6 6	Back	180			1	54	0.3	NFRC	0.23	NFRC	Bug Screen
Door 1 16080SLD 3	Window	Front Exterior Wall 2x6 7	Front	0	16	8	1	128	0.3	NFRC	0.23	NFRC	Bug Screen
Window 1 8660SL 3	Window	Front Exterior Wall 2x6 7	Front	0			1	51	0.3	NFRC	0.23	NFRC	Bug Screen
Door A1 3080FR 3	Window	Left Exterior Wall 2x6 6	Left	90			1	24	0.3	NFRC	0.23	NFRC	Bug Screen
Window 3056SL 3	Window	Rear Exterior Wall 2x6 7	Back	180			1	17	0.3	NFRC	0.23	NFRC	Bug Screen
Window 6056SL 3	Window	Rear Exterior Wall 2x6 7	Back	180			1	33	0.3	NFRC	0.23	NFRC	Bug Screen
Window 5056SL 3	Window	Rear Exterior Wall 2x6 7	Back	180			1	28	0.3	NFRC	0.23	NFRC	Bug Screen
Window 3626FX 3	Window	Rear Exterior Wall 2x6 7	Back	180			1	9	0.3	NFRC	0.23	NFRC	Bug Screen
Window 1 4046SL 3	Window	Front Exterior Wall 2x6 8	Front	0			1	18	0.3	NFRC	0.23	NFRC	Bug Screen
Window 1 2020FX 3	Window	Right Exterior Wall 2x6 7	Right	270			1	4	0.3	NFRC	0.23	NFRC	Bug Screen
(2) Window 1 6046SL 3	Window	Rear Exterior Wall 2x6 8	Back	180			1	54	0.3	NFRC	0.23	NFRC	Bug Screen
Door 1 16080SLD 4	Window	Front Exterior Wall 2x6 9	Front	0	16	8	1	128	0.3	NFRC	0.23	NFRC	Bug Screen
Window 1 8660SL 4	Window	Front Exterior Wall 2x6 9	Front	0			1	51	0.3	NFRC	0.23	NFRC	Bug Screen
Door A1 3080FR 4	Window	Left Exterior Wall 2x6 8	Left	90			1	24	0.3	NFRC	0.23	NFRC	Bug Screen
Window 3056SL 4	Window	Rear Exterior Wall 2x6 9	Back	180			1	17	0.3	NFRC	0.23	NFRC	Bug Screen
Window 6056SL 4	Window	Rear Exterior Wall 2x6 9	Back	180			1	33	0.3	NFRC	0.23	NFRC	Bug Screen
Window 5056SL 4	Window	Rear Exterior Wall 2x6 9	Back	180			1	28	0.3	NFRC	0.23	NFRC	Bug Screen
Window 3626FX 4	Window	Rear Exterior Wall 2x6 9	Back	180			1	9	0.3	NFRC	0.23	NFRC	Bug Screen
Window 1 4046SL 4	Window	Front Exterior Wall 2x6 10	Front	0			1	18	0.3	NFRC	0.23	NFRC	Bug Screen
Window 1 2020FX 4	Window	Right Exterior Wall 2x6 9	Right	270			1	4	0.3	NFRC	0.23	NFRC	Bug Screen
(2) Window 1 6046SL 4	Window	Rear Exterior Wall 2x6 10	Back	180			1	54	0.3	NFRC	0.23	NFRC	Bug Screen
Door 1 16080SLD 5	Window	Front Exterior Wall 2x6 11	Front	0	16	8	1	128	0.3	NFRC	0.23	NFRC	Bug Screen
Window 1 8660SL 5	Window	Front Exterior Wall 2x6 11	Front	0			1	51	0.3	NFRC	0.23	NFRC	Bug Screen
Door A1 3080FR 5	Window	Left Exterior Wall 2x6 10	Left	90			1	24	0.3	NFRC	0.23	NFRC	Bug Screen
Window 3056SL 5	Window	Rear Exterior Wall 2x6 11	Back	180			1	17	0.3	NFRC	0.23	NFRC	Bug Screen

FENESTRATION / GLAZING

01	02	03	04	05	06	07	08	09	10	11	12	13	14
Name	Type	Surface	Orientation	Azimuth	Width (ft)	Height (ft)	Mult.	Area (ft^2)	U-factor	U-factor Source	SHGC	SHGC Source	Exterior Shading
Window 6056SL 5	Window	Rear Exterior Wall 2x6 11	Back	180			1	33	0.3	NFRC	0.23	NFRC	Bug Screen
Window 5056SL 5	Window	Rear Exterior Wall 2x6 11	Back	180			1	28	0.3	NFRC	0.23	NFRC	Bug Screen
Window 3626FX 5	Window	Rear Exterior Wall 2x6 11	Back	180			1	9	0.3	NFRC	0.23	NFRC	Bug Screen
Window 1 4046SL 5	Window	Front Exterior Wall 2x6 12	Front	0			1	18	0.3	NFRC	0.23	NFRC	Bug Screen
Window 1 2020FX 5	Window	Right Exterior Wall 2x6 11	Right	270			1	4	0.3	NFRC	0.23	NFRC	Bug Screen
(2) Window 1 6046SL 5	Window	Rear Exterior Wall 2x6 12	Back	180			1	54	0.3	NFRC	0.23	NFRC	Bug Screen
Door 1 16080SLD 6	Window	Front Exterior Wall 2x6 13	Front	0	16	8	1	128	0.3	NFRC	0.23	NFRC	Bug Screen
Window 1 8660SL 6	Window	Front Exterior Wall 2x6 13	Front	0			1	51	0.3	NFRC	0.23	NFRC	Bug Screen
Window 3056SL 6	Window	Rear Exterior Wall 2x6 13	Back	180			1	17	0.3	NFRC	0.23	NFRC	Bug Screen
Window 6056SL 6	Window	Rear Exterior Wall 2x6 13	Back	180			1	33	0.3	NFRC	0.23	NFRC	Bug Screen
Window 5056SL 6	Window	Rear Exterior Wall 2x6 13	Back	180			1	28	0.3	NFRC	0.23	NFRC	Bug Screen
Window 3626FX 6	Window	Rear Exterior Wall 2x6 13	Back	180			1	9	0.3	NFRC	0.23	NFRC	Bug Screen
Door A1 3080FR 6	Window	Left Exterior Wall 2x6 12	Left	90			1	24	0.3	NFRC	0.23	NFRC	Bug Screen
Window 1 4046SL 6	Window	Front Exterior Wall 2x6 14	Front	0			1	18	0.3	NFRC	0.23	NFRC	Bug Screen
(2) Window 1 6046SL 6	Window	Rear Exterior Wall 2x6 14	Back	180			1	54	0.3	NFRC	0.23	NFRC	Bug Screen
Window 1 2020FX 6	Window	Right Exterior Wall 2x6 12	Right	270			1	4	0.3	NFRC	0.23	NFRC	Bug Screen
(2) Window 6 3060SH 2	Window	Front Exterior Wall 2x6 15	Front	0			1	36	0.3	NFRC	0.23	NFRC	Bug Screen
(2) Window 5 3060FX	Window	Front Exterior Wall 2x6 15	Front	0			1	36	0.3	NFRC	0.23	NFRC	Bug Screen
Window 4 3030FX 2	Window	Front Exterior Wall 2x6 15	Front	0			1	9	0.3	NFRC	0.23	NFRC	Bug Screen
Window 10 8660SL 2	Window	Rear Exterior Wall 2x6 15	Back	180			1	51	0.3	NFRC	0.23	NFRC	Bug Screen
Window 11 6060SL 2	Window	Rear Exterior Wall 2x6 15	Back	180			1	36	0.3	NFRC	0.23	NFRC	Bug Screen
(3) Window 7 2626FX 2	Window	Right Exterior Wall 2x6 13	Right	270			1	19	0.3	NFRC	0.23	NFRC	Bug Screen
(2) Window 8 2626FX 2	Window	Right Exterior Wall 2x6 13	Right	270			1	13	0.3	NFRC	0.23	NFRC	Bug Screen
Window 9 2626FX 2	Window	Right Exterior Wall 2x6 13	Right	270			1	7	0.3	NFRC	0.23	NFRC	Bug Screen
Window 4 3030FX 3	Window	Front Exterior Wall 2x6 16	Front	0			1	9	0.3	NFRC	0.23	NFRC	Bug Screen

FENESTRATION / GLAZING

01	02	03	04	05	06	07	08	09	10	11	12	13	14
Name	Type	Surface	Orientation	Azimuth	Width (ft)	Height (ft)	Mult.	Area (ft^2)	U-factor	U-factor Source	SHGC	SHGC Source	Exterior Shading
Window 5 3060FX 2	Window	Front Exterior Wall 2x6 16	Front	0			1	18	0.3	NFRC	0.23	NFRC	Bug Screen
Door 2 6080SLD	Window	Rear Exterior Wall 2x6 16	Back	180			1	48	0.3	NFRC	0.23	NFRC	Bug Screen
Window 3 4046SL	Window	Rear Exterior Wall 2x6 16	Back	180			1	18	0.3	NFRC	0.23	NFRC	Bug Screen
Window 1 8650SL 2	Window	Right Exterior Wall 2x6 14	Right	270			1	43	0.3	NFRC	0.23	NFRC	Bug Screen

OPAQUE DOORS

01	02	03	04
Name	Side of Building	Area (ft^2)	U-factor
Door A1 3080SC	Left Exterior Wall 2x6 2	24	0.2
Door A1 3080SCDR	Right Exterior Wall 2x6 3	24	0.2
Door A1 3080SCDR 2	Right Exterior Wall 2x6 5	24	0.2
Door A1 3080SCDR 3	Right Exterior Wall 2x6 7	24	0.2
Door A1 3080SCDR 4	Right Exterior Wall 2x6 9	24	0.2
Door A1 3080SCDR 5	Right Exterior Wall 2x6 11	24	0.2
Door A1 3080SCDR 6	Right Exterior Wall 2x6 12	24	0.2
Door A1 3080SC 2	Right Exterior Wall 2x6 14	24	0.2

OVERHANGS AND FINS

01	02	03	04	05	06	07	08	09	10	11	12	13	14
Window	Overhang					Left Fin				Right Fin			
	Depth	Dist Up	Left Extent	Right Extent	Flap Ht.	Depth	Top Up	Dist L	Bot Up	Depth	Top Up	Dist R	Bot Up
Door 1 16080SLD	19	1.3	1.55	1.42	0	0	0	0	0	0	0	0	0
Door 1 16080SLD 2	19	1.3	1.55	1.42	0	0	0	0	0	0	0	0	0

OVERHANGS AND FINS

01	02	03	04	05	06	07	08	09	10	11	12	13	14
Window	Overhang					Left Fin				Right Fin			
	Depth	Dist Up	Left Extent	Right Extent	Flap Ht.	Depth	Top Up	Dist L	Bot Up	Depth	Top Up	Dist R	Bot Up
Door 1 16080SLD 3	19	1.3	1.55	1.42	0	0	0	0	0	0	0	0	0
Door 1 16080SLD 4	19	1.3	1.55	1.42	0	0	0	0	0	0	0	0	0
Door 1 16080SLD 5	19	1.3	1.55	1.42	0	0	0	0	0	0	0	0	0
Door 1 16080SLD 6	19	1.3	1.55	1.42	0	0	0	0	0	0	0	0	0

SLAB FLOORS

01	02	03	04	05	06	07	08
Name	Zone	Area (ft^2)	Perimeter (ft)	Edge Insul. R-value and Depth	Edge Insul. R-value and Depth	Carpeted Fraction	Heated
Slab-on-Grade	Unit A	632	86	none	0	80%	No
Slab-on-Grade 2	Unit B	584	89	none	0	80%	No
Slab-on-Grade 3	Unit B1	584	89	none	0	80%	No
Slab-on-Grade 4	Unit B2	584	89	none	0	80%	No
Slab-on-Grade 5	Unit B3	584	89	none	0	80%	No
Slab-on-Grade 6	Unit B4	584	89	none	0	80%	No
Slab-on-Grade 7	Unit B5	584	89	none	0	80%	No
Slab-on-Grade 8	Unit A - ADU	564	78	none	0	80%	No
Slab-on-Grade 9	__Garage__	271	27	none	0	0%	No
Slab-on-Grade 10	__Garage__	252	48	none	0	0%	No

SLAB FLOORS

01	02	03	04	05	06	07	08
Name	Zone	Area (ft^2)	Perimeter (ft)	Edge Insul. R-value and Depth	Edge Insul. R-value and Depth	Carpeted Fraction	Heated
Slab-on-Grade 11	__Garage__	252	48	none	0	0%	No
Slab-on-Grade 12	__Garage__	252	48	none	0	0%	No
Slab-on-Grade 13	__Garage__	252	48	none	0	0%	No
Slab-on-Grade 14	__Garage__	252	48	none	0	0%	No
Slab-on-Grade 15	__Garage__	252	48	none	0	0%	No
Slab-on-Grade 16	__Garage__	339	35	none	0	0%	No

OPAQUE SURFACE CONSTRUCTIONS

01	02	03	04	05	06	07	08
Construction Name	Surface Type	Construction Type	Framing	Total Cavity R-value	Interior / Exterior Continuous R-value	U-factor	Assembly Layers
R-0 Wall	Exterior Walls	Wood Framed Wall	2x4 @ 16 in. O. C.	R-0	None / None	0.361	Inside Finish: Gypsum Board Cavity / Frame: no insul. / 2x4 Exterior Finish: 3 Coat Stucco
R-21 Wall + R4	Exterior Walls	Wood Framed Wall	2x6 @ 16 in. O. C.	R-21	None / R-4	0.051	Inside Finish: Gypsum Board Cavity / Frame: R-21 / 2x6 Sheathing / Insulation: R-4 Sheathing Exterior Finish: 3 Coat Stucco
R-30 Roof Cathedral	Cathedral Ceilings	Wood Framed Ceiling	2x12 @ 16 in. O. C.	R-0	R-30 / None	0.03	Roofing: Light Roof (Asphalt Shingle) Roof Deck: Wood Siding/sheathing/decking Cavity / Frame: no insul. / 2x12 Sheathing / Insulation: R-30 Sheathing Inside Finish: Gypsum Board

OPAQUE SURFACE CONSTRUCTIONS

01	02	03	04	05	06	07	08
Construction Name	Surface Type	Construction Type	Framing	Total Cavity R-value	Interior / Exterior Continuous R-value	U-factor	Assembly Layers
R-30 Ceiling W/ Deck Abov	Cathedral Ceilings	Wood Framed Ceiling	2x12 @ 16 in. O. C.	R-30	None / None	0.036	Roofing: Light Roof (Asphalt Shingle) Roof Deck: Wood Siding/sheathing/decking Cavity / Frame: R-30 / 2x12 Inside Finish: Gypsum Board
R-15 Garage Fire Wall	Interior Walls	Wood Framed Wall	2x4 @ 16 in. O. C.	R-15	None / None	0.086	Inside Finish: Gypsum Board Cavity / Frame: R-15 / 2x4 Other Side Finish: Gypsum Board
R-0 Wall1	Interior Walls	Wood Framed Wall	2x4 @ 16 in. O. C.	R-0	None / None	0.277	Inside Finish: Gypsum Board Cavity / Frame: no insul. / 2x4 Other Side Finish: Gypsum Board
R-21 Garage Fire Wall	Interior Walls	Wood Framed Wall	2x4 @ 16 in. O. C.	R-21	None / None	0.075	Inside Finish: Gypsum Board Cavity / Frame: R-21 / 2x4 Other Side Finish: Gypsum Board
R-30 Floor No Crawl Space	Exterior Floors	Wood Framed Floor	2x10 @ 16 in. O. C.	R-30	None / None	0.034	Floor Surface: Carpeted Floor Deck: Wood Siding/sheathing/decking Cavity / Frame: R-30 / 2x10
R-0 Floor Over Living Spa	Interior Floors	Wood Framed Floor	2x12 @ 16 in. O. C.	R-0	None / None	0.196	Floor Surface: Carpeted Floor Deck: Wood Siding/sheathing/decking Cavity / Frame: no insul. / 2x12 Ceiling Below Finish: Gypsum Board
R-30 Floor Over Garage	Interior Floors	Wood Framed Floor	2x12 @ 16 in. O. C.	R-30	None / None	0.032	Floor Surface: Carpeted Floor Deck: Wood Siding/sheathing/decking Cavity / Frame: R-30 / 2x12 Ceiling Below Finish: Gypsum Board

BUILDING ENVELOPE - HERS VERIFICATION

01	02	03	04
Quality Insulation Installation (QII)	High R-value Spray Foam Insulation	Building Envelope Air Leakage	CFM50
Required	Not Required	Not Required	n/a

WATER HEATING SYSTEMS

01	02	03	04	05	06	07	08	09
Name	System Type	Number of Systems in Building	Multi-Family Distribution Type	Dwelling Unit Distribution Type	Water Heater Name (#)	Solar Heating System	Compact Distribution	HERS Verification
DHW Sys 1	Domestic Hot Water (DHW)	8	n/a	Standard Distribution System	DHW Heater 1 (1)	n/a	None	n/a

WATER HEATERS

01	02	03	04	05	06	07	08	09	10	11	12
Name	Heating Element Type	Tank Type	# of Units	Tank Vol. (gal)	Energy Factor or Efficiency	Input Rating or Pilot	Tank Insulation R-value (Int/Ext)	Standby Loss or Recovery Eff	1st Hr. Rating or Flow Rate	NEEA Heat Pump Brand or Model	Tank Location or Ambient Condition
DHW Heater 1	Heat Pump	n/a	8	80	NEEA Rated	<= 12 kW	n/a	n/a	n/a	Ruud\PROUH80 T2 RU37530 (80 gal)	Garage

WATER HEATING - HERS VERIFICATION

01	02	03	04	05	06	07	08
Name	Pipe Insulation	Parallel Piping	Compact Distribution	Compact Distribution Type	Recirculation Control	Central DHW Distribution	Shower Drain Water Heat Recovery
DDU-1 Unit A | DHW Sys 1	Not Required	Not Required	Not Required	None	Not Required	Not Required	Not Required
DDU-2 Unit B | DHW Sys 1	Not Required	Not Required	Not Required	None	Not Required	Not Required	Not Required

WATER HEATING - HERS VERIFICATION

01	02	03	04	05	06	07	08
Name	Pipe Insulation	Parallel Piping	Compact Distribution	Compact Distribution Type	Recirculation Control	Central DHW Distribution	Shower Drain Water Heat Recovery
DDU-3 Unit B | DHW Sys 1	Not Required	Not Required	Not Required	None	Not Required	Not Required	Not Required
DDU-4 Unit B | DHW Sys 1	Not Required	Not Required	Not Required	None	Not Required	Not Required	Not Required
DDU-5 Unit B | DHW Sys 1	Not Required	Not Required	Not Required	None	Not Required	Not Required	Not Required
DDU-6 Unit B | DHW Sys 1	Not Required	Not Required	Not Required	None	Not Required	Not Required	Not Required
DDU-7 Unit B | DHW Sys 1	Not Required	Not Required	Not Required	None	Not Required	Not Required	Not Required
DDU-8 Unit A (R) | DHW Sys 1	Not Required	Not Required	Not Required	None	Not Required	Not Required	Not Required

SPACE CONDITIONING SYSTEMS

01	02	03	04	05	06	07	08	09	10	11
Name	System Type	Heating Unit Name	Cooling Unit Name	Fan Name	Distribution Name	Required Thermostat Type	Status	Verified Existing Condition	Heating Equipment Count	Cooling Equipment Count
DDU-1 Unit A | :Heat Pump System 1:Air Distribution System 1:HVAC Fan 1:2:3	Heat pump heating cooling	Heat Pump System 1	Heat Pump System 1	HVAC Fan 1	Air Distribution System 1	Setback	New	NA	1	1
DDU-2 Unit B | :Heat Pump System 2:Air Distribution System 2:HVAC Fan 2:2:3	Heat pump heating cooling	Heat Pump System 2	Heat Pump System 2	HVAC Fan 2	Air Distribution System 2	Setback	New	NA	1	1
DDU-3 Unit B | :Heat Pump System 3:Air Distribution System 3:HVAC Fan 3:2:3	Heat pump heating cooling	Heat Pump System 3	Heat Pump System 3	HVAC Fan 3	Air Distribution System 3	Setback	New	NA	1	1

SPACE CONDITIONING SYSTEMS

01	02	03	04	05	06	07	08	09	10	11
Name	System Type	Heating Unit Name	Cooling Unit Name	Fan Name	Distribution Name	Required Thermostat Type	Status	Verified Existing Condition	Heating Equipment Count	Cooling Equipment Count
DDU-4 Unit B | :Heat Pump System 4:Air Distribution System 4:HVAC Fan 4:2:3	Heat pump heating cooling	Heat Pump System 4	Heat Pump System 4	HVAC Fan 4	Air Distribution System 4	Setback	New	NA	1	1
DDU-5 Unit B | :Heat Pump System 5:Air Distribution System 5:HVAC Fan 5:2:3	Heat pump heating cooling	Heat Pump System 5	Heat Pump System 5	HVAC Fan 5	Air Distribution System 5	Setback	New	NA	1	1
DDU-6 Unit B | :Heat Pump System 6:Air Distribution System 6:HVAC Fan 6:2:3	Heat pump heating cooling	Heat Pump System 6	Heat Pump System 6	HVAC Fan 6	Air Distribution System 6	Setback	New	NA	1	1
DDU-7 Unit B | :Heat Pump System 7:Air Distribution System 7:HVAC Fan 7:2:3	Heat pump heating cooling	Heat Pump System 7	Heat Pump System 7	HVAC Fan 7	Air Distribution System 7	Setback	New	NA	1	1
DDU-8 Unit A (R) | :Heat Pump System 8:Air Distribution System 8:HVAC Fan 8:2:3	Heat pump heating cooling	Heat Pump System 8	Heat Pump System 8	HVAC Fan 8	Air Distribution System 8	Setback	New	NA	1	1

HVAC - HEAT PUMPS

01	02	03	04	05	06	07	08	09	10	11
Name	System Type	Number of Units	Heating			Cooling		Zonally Controlled	Compressor Type	HERS Verification
			HSPF/COP	Cap 47	Cap 17	SEER	EER/CEER			
Heat Pump System 1	Central split HP	1	8.5	35000	27500	14.5	12.5	Not Zonal	Single Speed	Heat Pump System 1-hers-htpump
Heat Pump System 2	Central split HP	1	8.5	35000	27500	14.5	12.5	Not Zonal	Single Speed	Heat Pump System 2-hers-htpump

HVAC - HEAT PUMPS

01	02	03	04	05	06	07	08	09	10	11
Name	System Type	Number of Units	Heating			Cooling		Zonally Controlled	Compressor Type	HERS Verification
			HSPF/COP	Cap 47	Cap 17	SEER	EER/CEER			
Heat Pump System 3	Central split HP	1	8.5	35000	27500	14.5	12.5	Not Zonal	Single Speed	Heat Pump System 3-hers-htpump
Heat Pump System 4	Central split HP	1	8.5	35000	27500	14.5	12.5	Not Zonal	Single Speed	Heat Pump System 4-hers-htpump
Heat Pump System 5	Central split HP	1	8.5	35000	27500	14.5	12.5	Not Zonal	Single Speed	Heat Pump System 5-hers-htpump
Heat Pump System 6	Central split HP	1	8.5	35000	27500	14.5	12.5	Not Zonal	Single Speed	Heat Pump System 6-hers-htpump
Heat Pump System 7	Central split HP	1	8.5	35000	27500	14.5	12.5	Not Zonal	Single Speed	Heat Pump System 7-hers-htpump
Heat Pump System 8	Central split HP	1	8.5	35000	27500	14.5	12.5	Not Zonal	Single Speed	Heat Pump System 8-hers-htpump

HVAC HEAT PUMPS - HERS VERIFICATION

01	02	03	04	05	06	07	08	09
Name	Verified Airflow	Airflow Target	Verified EER	Verified SEER	Verified Refrigerant Charge	Verified HSPF	Verified Heating Cap 47	Verified Heating Cap 17
Heat Pump System 1-hers-htpump	Required	350	Required	Required	Yes	Yes	Yes	Yes
Heat Pump System 2-hers-htpump	Required	350	Required	Required	Yes	Yes	Yes	Yes
Heat Pump System 3-hers-htpump	Required	350	Required	Required	Yes	Yes	Yes	Yes
Heat Pump System 4-hers-htpump	Required	350	Required	Required	Yes	Yes	Yes	Yes
Heat Pump System 5-hers-htpump	Required	350	Required	Required	Yes	Yes	Yes	Yes

HVAC HEAT PUMPS - HERS VERIFICATION

01	02	03	04	05	06	07	08	09
Name	Verified Airflow	Airflow Target	Verified EER	Verified SEER	Verified Refrigerant Charge	Verified HSPF	Verified Heating Cap 47	Verified Heating Cap 17
Heat Pump System 6-hers-htpump	Required	350	Required	Required	Yes	Yes	Yes	Yes
Heat Pump System 7-hers-htpump	Required	350	Required	Required	Yes	Yes	Yes	Yes
Heat Pump System 8-hers-htpump	Required	350	Required	Required	Yes	Yes	Yes	Yes

HVAC - DISTRIBUTION SYSTEMS

01	02	03	04	05	06	07	08	09	10	11	12
			Duct Ins. R-value		Duct Location		Surface Area				
Name	Type	Design Type	Supply	Return	Supply	Return	Supply	Return	Bypass Duct	Duct Leakage	HERS Verification
Air Distribution System 1	Conditioned space-entirely	Non-Verified	R-6	R-6	Conditioned Zone	Conditioned Zone	n/a	n/a	No Bypass Duct		Air Distribution System 1-hers-dist
Air Distribution System 2	Conditioned space-entirely	Non-Verified	R-6	R-6	Conditioned Zone	Conditioned Zone	n/a	n/a	No Bypass Duct		Air Distribution System 2-hers-dist
Air Distribution System 3	Conditioned space-entirely	Non-Verified	R-6	R-6	Conditioned Zone	Conditioned Zone	n/a	n/a	No Bypass Duct		Air Distribution System 3-hers-dist
Air Distribution System 4	Conditioned space-entirely	Non-Verified	R-6	R-6	Conditioned Zone	Conditioned Zone	n/a	n/a	No Bypass Duct		Air Distribution System 4-hers-dist

HVAC - DISTRIBUTION SYSTEMS

01	02	03	04	05	06	07	08	09	10	11	12
			Duct Ins. R-value		Duct Location		Surface Area				
Name	Type	Design Type	Supply	Return	Supply	Return	Supply	Return	Bypass Duct	Duct Leakage	HERS Verification
Air Distribution System 5	Conditioned space-entirely	Non-Verified	R-6	R-6	Conditioned Zone	Conditioned Zone	n/a	n/a	No Bypass Duct		Air Distribution System 5-hers-dist
Air Distribution System 6	Conditioned space-entirely	Non-Verified	R-6	R-6	Conditioned Zone	Conditioned Zone	n/a	n/a	No Bypass Duct		Air Distribution System 6-hers-dist
Air Distribution System 7	Conditioned space-entirely	Non-Verified	R-6	R-6	Conditioned Zone	Conditioned Zone	n/a	n/a	No Bypass Duct		Air Distribution System 7-hers-dist
Air Distribution System 8	Conditioned space-entirely	Non-Verified	R-6	R-6	Conditioned Zone	Conditioned Zone	n/a	n/a	No Bypass Duct		Air Distribution System 8-hers-dist

HVAC DISTRIBUTION - HERS VERIFICATION

01	02	03	04	05	06	07	08	09
Name	Duct Leakage Verification	Duct Leakage Target (%)	Verified Duct Location	Verified Duct Design	Buried Ducts	Deeply Buried Ducts	Low-leakage Air Handler	Low Leakage Ducts Entirely in Conditioned Space
Air Distribution System 1-hers-dist	Yes	5.0	Required	Not Required	Not Required	Credit not taken	Required	No
Air Distribution System 2-hers-dist	Yes	5.0	Required	Not Required	Not Required	Credit not taken	Required	No

HVAC DISTRIBUTION - HERS VERIFICATION

01	02	03	04	05	06	07	08	09
Name	Duct Leakage Verification	Duct Leakage Target (%)	Verified Duct Location	Verified Duct Design	Buried Ducts	Deeply Buried Ducts	Low-leakage Air Handler	Low Leakage Ducts Entirely in Conditioned Space
Air Distribution System 3-hers-dist	Yes	5.0	Required	Not Required	Not Required	Credit not taken	Required	No
Air Distribution System 4-hers-dist	Yes	5.0	Required	Not Required	Not Required	Credit not taken	Required	No
Air Distribution System 5-hers-dist	Yes	5.0	Required	Not Required	Not Required	Credit not taken	Required	No
Air Distribution System 6-hers-dist	Yes	5.0	Required	Not Required	Not Required	Credit not taken	Required	No
Air Distribution System 7-hers-dist	Yes	5.0	Required	Not Required	Not Required	Credit not taken	Required	No
Air Distribution System 8-hers-dist	Yes	5.0	Required	Not Required	Not Required	Credit not taken	Required	No

HVAC - FAN SYSTEMS

01	02	03	04
Name	Type	Fan Power (Watts/CFM)	Name
HVAC Fan 1	HVAC Fan	0.5	HVAC Fan 1-hers-fan
HVAC Fan 2	HVAC Fan	0.45	HVAC Fan 2-hers-fan
HVAC Fan 3	HVAC Fan	0.45	HVAC Fan 3-hers-fan
HVAC Fan 4	HVAC Fan	0.45	HVAC Fan 4-hers-fan
HVAC Fan 5	HVAC Fan	0.45	HVAC Fan 5-hers-fan

HVAC - FAN SYSTEMS

01	02	03	04
Name	Type	Fan Power (Watts/CFM)	Name
HVAC Fan 6	HVAC Fan	0.45	HVAC Fan 6-hers-fan
HVAC Fan 7	HVAC Fan	0.45	HVAC Fan 7-hers-fan
HVAC Fan 8	HVAC Fan	0.45	HVAC Fan 8-hers-fan

HVAC FAN SYSTEMS - HERS VERIFICATION

01	02	03
Name	Verified Fan Watt Draw	Required Fan Efficacy (Watts/CFM)
HVAC Fan 1-hers-fan	Required	0.5
HVAC Fan 2-hers-fan	Required	0.45
HVAC Fan 3-hers-fan	Required	0.45
HVAC Fan 4-hers-fan	Required	0.45
HVAC Fan 5-hers-fan	Required	0.45
HVAC Fan 6-hers-fan	Required	0.45
HVAC Fan 7-hers-fan	Required	0.45
HVAC Fan 8-hers-fan	Required	0.45

IAQ (INDOOR AIR QUALITY) FANS

01	02	03	04	05	06	07
Dwelling Unit	IAQ CFM	IAQ Watts/CFM	IAQ Fan Type	IAQ Recovery Effectiveness - SRE	IAQ Recovery Effectiveness - ASRE	HERS Verification
DDU-1 Unit A 1/1	76	0.35	Exhaust	n/a	n/a	Yes
DDU-2 Unit B 1/1	76	0.35	Exhaust	n/a	n/a	Yes
DDU-3 Unit B 1/1	76	0.35	Exhaust	n/a	n/a	Yes
DDU-4 Unit B 1/1	76	0.35	Exhaust	n/a	n/a	Yes

IAQ (INDOOR AIR QUALITY) FANS

01	02	03	04	05	06	07
Dwelling Unit	IAQ CFM	IAQ Watts/CFM	IAQ Fan Type	IAQ Recovery Effectiveness - SRE	IAQ Recovery Effectiveness - ASRE	HERS Verification
DDU-5 Unit B 1/1	76	0.35	Exhaust	n/a	n/a	Yes
DDU-6 Unit B 1/1	76	0.35	Exhaust	n/a	n/a	Yes
DDU-7 Unit B 1/1	76	0.35	Exhaust	n/a	n/a	Yes
DDU-8 Unit A (R) 1/1	75	0.35	Exhaust	n/a	n/a	Yes

DOCUMENTATION AUTHOR'S DECLARATION STATEMENT

1. I certify that this Certificate of Compliance documentation is accurate and complete.

Documentation Author Name: Ken La	Documentation Author Signature: Ken La
Company: Gouvis Engineering Consulting Group	Signature Date: 03/16/2023
Address: 15 Studebaker	CEA/ HERS Certification Identification (If applicable):
City/State/Zip: Irvine, CA 92618	Phone: 949-752-1612

RESPONSIBLE PERSON'S DECLARATION STATEMENT

I certify the following under penalty of perjury, under the laws of the State of California:

1. I am eligible under Division 3 of the Business and Professions Code to accept responsibility for the building design identified on this Certificate of Compliance.
2. I certify that the energy features and performance specifications identified on this Certificate of Compliance conform to the requirements of Title 24, Part 1 and Part 6 of the California Code of Regulations.
3. The building design features or system design features identified on this Certificate of Compliance are consistent with the information provided on other applicable compliance documents, worksheets, calculations, plans and specifications submitted to the enforcement agency for approval with this building permit application.

Responsible Designer Name: Ken La	Responsible Designer Signature: Ken La
Company: Gouvis Engineering Consulting Group	Date Signed: 03/16/2023
Address: 15 Studebaker	License:
City/State/Zip: Irvine, CA 92618	Phone: 949-752-1612

Digitally signed by ConSol Home Energy Efficiency Rating System Services, Inc. (CHEERS). This digital signature is provided in order to secure the content of this registered document, and in no way implies Registration Provider responsibility for the accuracy of the information.

GOUVIS engineering consulting group, inc.®
15 Studebaker
Irvine
CA 92618

Irvine
tel 949.752.1612
fax 949.752.5321

Palm Springs
tel 760.323.5090

REGISTERED PROFESSIONAL ENGINEER
RADE BABIC
No. M 38573
Exp. 09-30-2023
MECHANICAL
STATE OF CALIFORNIA

DATE SIGNED: 3/16/23

RESTRICTIVE NOTICE

THESE DESIGNS, DRAWINGS, AND SPECIFICATIONS ARE THE EXCLUSIVE PROPERTY OF GOUVIS ENGINEERING CONSULTING GROUP. THEY ARE THE SUBJECTOF COPYRIGHT AND OTHER LEGAL PROTECTION. THEY MAY BE USED ONLY BY THEIR INTENDED RECIPIENT AND ONLY FOR THE PROJECT DEPICTED HEREIN. NO PART OF THESE DRAWINGS ARE TO BE COPIED, TRANSFERRED, REPRODUCED, NOR CAN THEY BE USED, IN WHOLE OR IN PART, BY ANY OTHER PERSON OR FOR ANY OTHER PROJECT OR STRUCTURE, WITHOUT THE PRIOR EXPRESS WRITTEN CONSENT OF GOUVIS ENGINEERING CONSULTING GROUP

© 2017 GOUVIS ENGINEERING CONSULTING GROUP INC. - ALL RIGHTS RESERVED

PROJECT:
Tenant Square

DEVELOPER:
Osito Holdings LLC

ARCHITECT:
Gary Moore & Associates

LOCATION:
Morgan Hill
Santa Clara
CA

REVISIONS

NO.	DATE	DESCRIPTION
1	02/02/23	PLAN CHECK

SHEET NAME:
TITLE 24 ENERGY COMPLIANCE FORMS BUILDING A CON'T
1

PROJECT NUMBER:
66074

ENGINEER:
DRAFTER:

SHEET NUMBER:
T24-2

ISSUED DATE:XX/XX/XX

GENERAL INFORMATION					
01	Project Name	Tenant Square			
02	Run Title	Title 24 Analysis			
03	Project Location	215 Tennant Ave			
04	City	Morgan Hill, Santa Clara	05	Standards Version	2019
06	Zip code	95037	07	Software Version	EnergyPro 8.3
08	Climate Zone	4	09	Front Orientation (deg/ Cardinal)	AllOrientations
10	Building Type	Multifamily	11	Number of Dwelling Units	8
12	Project Scope	NewConstruction	13	Number of Bedrooms	24
14	Addition Cond. Floor Area (ft²)	0	15	Number of Stories	2
16	Existing Cond. Floor Area (ft²)	n/a	17	Fenestration Average U-factor	0.3
18	Total Cond. Floor Area (ft²)	12286	19	Glazing Percentage (%)	23.72%
20	ADU Bedroom Count	n/a	21	ADU Conditioned Floor Area	n/a
22	Is Natural Gas Available?	Yes			

COMPLIANCE RESULTS	
01	Building Complies with Computer Performance
02	This building incorporates features that require field testing and/or verification by a certified HERS rater under the supervision of a CEC-approved HERS provider.
03	This building incorporates one or more Special Features shown below

ENERGY DESIGN RATING	Energy Design Ratings			
	Efficiency¹ (EDR)	Total² (EDR)	Efficiency¹ (EDR)	Total² (EDR)
Standard Design	58.2	31.5		
Proposed Designs				
North Facing	53.5	26.8	4.7	4.7
East Facing	57.3	30.5	0.9	1
South Facing	53.8	27.1	4.4	4.4
West Facing	56.4	29.7	1.8	1.8
RESULT: ³: COMPLIES				

¹ Efficiency EDR includes improvements to the building envelope and more efficient equipment
² Total EDR includes efficiency and demand response measures such as photovoltaic (PV) systems and batteries
³ Building complies when efficiency and total compliance margins are greater than or equal to zero

- Standard Design PV Capacity: 19.17 kWdc
- Proposed PV Capacity Scaling: North (19.17 kWdc) East (19.17 kWdc) South (19.17 kWdc) West (19.17 kWdc)

ENERGY USE SUMMARY

Energy Use (kTDV/ft²-yr)	Standard Design	Proposed Design	Compliance Margin	Percent Improvement
Space Heating	19.72	20.87	-1.15	-5.8
Space Cooling	11.97	4.99	6.98	58.3
IAQ Ventilation	4.22	4.22	0	0
Water Heating	20.69	16.65	4.04	19.5
Self Utilization Credit	n/a	0	0	n/a
North Facing Compliance Total	**56.6**	**46.73**	**9.87**	**17.4**
Space Heating	19.72	22.47	-2.75	-13.9
Space Cooling	11.97	11.56	0.41	3.4
IAQ Ventilation	4.22	4.22	0	0
Water Heating	20.69	16.4	4.29	20.7
Self Utilization Credit	n/a	0	0	n/a
East Facing Compliance Total	**56.6**	**54.65**	**1.95**	**3.4**
Space Heating	19.72	22.85	-3.13	-15.9
Space Cooling	11.97	3.89	8.08	67.5
IAQ Ventilation	4.22	4.22	0	0
Water Heating	20.69	16.39	4.3	20.8
Self Utilization Credit	n/a	0	0	n/a
South Facing Compliance Total	**56.6**	**47.35**	**9.25**	**16.3**
Space Heating	19.72	22.01	-2.29	-11.6
Space Cooling	11.97	10.25	1.72	14.4
IAQ Ventilation	4.22	4.22	0	0
Water Heating	20.69	16.35	4.34	21
Self Utilization Credit	n/a	0	0	n/a
West Facing Compliance Total	**56.6**	**52.83**	**3.77**	**6.7**

REQUIRED PV SYSTEMS - SIMPLIFIED

01	02	03	04	05	06	07	08	09	10	11	12
DC System Size (kWdc)	Exception	Module Type	Array Type	Power Electronics	CFI	Azimuth (deg)	Tilt Input	Array Angle (deg)	Tilt: (x in 12)	Inverter Eff. (%)	Annual Solar Access (%)
19.17	NA	Standard	Fixed	none	true	150-270	n/a	n/a	<=7:12	96	98

REQUIRED SPECIAL FEATURES

The following are features that must be installed as condition for meeting the modeled energy performance for this computer analysis.

- Floor has high level of insulation
- Window overhangs and/or fins
- Non-standard duct location (any location other than attic)
- Northwest Energy Efficiency Alliance (NEEA) rated heat pump water heater; specific brand/model, or equivalent, must be installed

HERS FEATURE SUMMARY

The following is a summary of the features that must be field-verified by a certified HERS Rater as a condition for meeting the modeled energy performance for this computer analysis. Additional detail is provided in the buildng tables below. Registered CF2Rs and CF3Rs are required to be completed in the HERS Registry

Building-level Verifications:
- Quality insulation installation (QII)
- Indoor air quality ventilation
- Enclosure air leakage for each dwelling unit
- Kitchen range hood

Cooling System Verifications:
- Minimum Airflow
- Verified EER
- Verified SEER
- Verified Refrigerant Charge
- Fan Efficacy Watts/CFM

Heating System Verifications:
- Verified HSPF
- Verified heat pump rated heating capacity

HVAC Distribution System Verifications:
- Duct leakage testing
- Ducts located entirely in conditioned space confirmed by duct leakage testing

Domestic Hot Water System Verifications:
- -- None --

BUILDING - FEATURES INFORMATION

01	02	03	04	05	06	07
Project Name	Conditioned Floor Area (ft²)	Number of Dwelling Units	Number of Bedrooms	Number of Zones	Number of Ventilation Cooling Systems	Number of Water Heating Systems
Tenant Square	12286	8	24	8	0	8

ZONE INFORMATION

01	02	03	04	05
Zone Name	Zone Type	Zone Floor Area (ft²)	Avg. Ceiling Height	Number of Dweilling Units
Unit A	Conditioned	1543	10	1
Unit B	Conditioned	1539	10	1
Unit B1	Conditioned	1539	10	1
Unit B2	Conditioned	1539	10	1
Unit B3	Conditioned	1539	10	1
Unit B4	Conditioned	1539	10	1
Unit B5	Conditioned	1539	10	1
Unit A - ADU	Conditioned	1509	10	1

DWELLING UNIT INFORMATION

01	02	03
Dwelling Unit Name	Dwelling Unit Type	Zone
DDU-1 Unit A-(1/1)	DU-1 Unit A	Unit A
DDU-2 Unit B-(1/1)	DU-2 Unit B	Unit B
DDU-3 Unit B-(1/1)	DU-3 Unit B	Unit B1
DDU-4 Unit B-(1/1)	DU-4 Unit B	Unit B2
DDU-5 Unit B-(1/1)	DU-5 Unit B	Unit B3

DWELLING UNIT INFORMATION

01	02	03
Dwelling Unit Name	Dwelling Unit Type	Zone
DDU-6 Unit B-(1/1)	DU-6 Unit B	Unit B4
DDU-7 Unit B-(1/1)	DU-7 Unit B	Unit B5
DDU-8 Unit A (R)-(1/1)	DU-8 Unit A (R)	Unit A - ADU

DWELLING UNIT TYPES

01	02	03	04	05	06	07
Name	CFA (ft2)	Number of Bedrooms	Number in Building	Space Conditioning Systems Assigned	DHW System Name	IAQ Vent Fan Name
DU-1 Unit A	1543	3	1	DDU-1 Unit A | :Heat Pump System 1:Air Distribution System 1:HVAC Fan 1:2:3	DHW Sys 1	Minimum Exhaust IAQ Fan
DU-2 Unit B	1539	3	1	DDU-2 Unit B | :Heat Pump System 2:Air Distribution System 2:HVAC Fan 2:2:3	DHW Sys 1	Minimum Exhaust IAQ Fan
DU-3 Unit B	1539	3	1	DDU-3 Unit B | :Heat Pump System 3:Air Distribution System 3:HVAC Fan 3:2:3	DHW Sys 1	Minimum Exhaust IAQ Fan
DU-4 Unit B	1539	3	1	DDU-4 Unit B | :Heat Pump System 4:Air Distribution System 4:HVAC Fan 4:2:3	DHW Sys 1	Minimum Exhaust IAQ Fan
DU-5 Unit B	1539	3	1	DDU-5 Unit B | :Heat Pump System 5:Air Distribution System 5:HVAC Fan 5:2:3	DHW Sys 1	Minimum Exhaust IAQ Fan
DU-6 Unit B	1539	3	1	DDU-6 Unit B | :Heat Pump System 6:Air Distribution System 6:HVAC Fan 6:2:3	DHW Sys 1	Minimum Exhaust IAQ Fan
DU-7 Unit B	1539	3	1	DDU-7 Unit B | :Heat Pump System 7:Air Distribution System 7:HVAC Fan 7:2:3	DHW Sys 1	Minimum Exhaust IAQ Fan
DU-8 Unit A (R)	1509	3	1	DDU-8 Unit A (R) | :Heat Pump System 8:Air Distribution System 8:HVAC Fan 8:2:3	DHW Sys 1	Minimum Exhaust IAQ Fan

OPAQUE SURFACES

01	02	03	04	05	06	07	08
Name	Zone	Construction	Azimuth	Orientation	Gross Area (ft²)	Window and Door Area (ft2)	Tilt (deg)
Front Exterior Wall 2x6	Unit A	R-21 Wall + R4	0	Front	261	108	90
Left Exterior Wall 2x6	Unit A	R-21 Wall + R4	90	Left	324	39	90
Rear Exterior Wall 2x6	Unit A	R-21 Wall + R4	180	Back	261	87	90
Right Exterior Wall 2x6	Unit A	R-21 Wall + R4	270	Right	18	0	90
Front Exterior Wall 2x6 2	Unit A	R-21 Wall + R4	0	Front	157	27	90
Left Exterior Wall 2x6 2	Unit A	R-21 Wall + R4	90	Left	330	67	90
Rear Exterior Wall 2x6 2	Unit A	R-21 Wall + R4	180	Back	270	71	90
Front Exterior Wall 2x6 3	Unit B	R-21 Wall + R4	0	Front	300	179	90
Rear Exterior Wall 2x6 3	Unit B	R-21 Wall + R4	180	Back	300	87	90
Right Exterior Wall 2x6 2	Unit B	R-21 Wall + R4	270	Right	63	24	90
Front Exterior Wall 2x6 4	Unit B	R-21 Wall + R4	0	Front	182	18	90
Left Exterior Wall 2x6 3	Unit B	R-21 Wall + R4	90	Left	134	28	90
Rear Exterior Wall 2x6 4	Unit B	R-21 Wall + R4	180	Back	224	54	90
Right Exterior Wall 2x6 3	Unit B	R-21 Wall + R4	270	Right	133	0	90
Front Exterior Wall 2x6 5	Unit B1	R-21 Wall + R4	0	Front	300	179	90
Left Exterior Wall 2x6 4	Unit B1	R-21 Wall + R4	90	Left	63	0	90
Rear Exterior Wall 2x6 5	Unit B1	R-21 Wall + R4	180	Back	300	87	90

OPAQUE SURFACES

01	02	03	04	05	06	07	08
Name	Zone	Construction	Azimuth	Orientation	Gross Area (ft²)	Window and Door Area (ft2)	Tilt (deg)
Right Exterior Wall 2x6 4	Unit B1	R-21 Wall + R4	270	Right	63	24	90
Front Exterior Wall 2x6 6	Unit B1	R-21 Wall + R4	0	Front	182	18	90
Left Exterior Wall 2x6 5	Unit B1	R-21 Wall + R4	90	Left	134	28	90
Right Exterior Wall 2x6 5	Unit B1	R-21 Wall + R4	270	Right	134	0	90
Rear Exterior Wall 2x6 6	Unit B1	R-21 Wall + R4	180	Back	224	54	90
Front Exterior Wall 2x6 7	Unit B2	R-21 Wall + R4	180	Back	300	179	90
Left Exterior Wall 2x6 6	Unit B2	R-21 Wall + R4	90	Left	63	0	90
Rear Exterior Wall 2x6 7	Unit B2	R-21 Wall + R4	180	Back	300	87	90
Right Exterior Wall 2x6 6	Unit B2	R-21 Wall + R4	270	Right	63	24	90
Front Exterior Wall 2x6 8	Unit B2	R-21 Wall + R4	0	Front	182	18	90
Left Exterior Wall 2x6 7	Unit B2	R-21 Wall + R4	90	Left	134	28	90
Rear Exterior Wall 2x6 8	Unit B2	R-21 Wall + R4	180	Back	224	54	90
Right Exterior Wall 2x6 7	Unit B2	R-21 Wall + R4	270	Right	134	0	90
Front Exterior Wall 2x6 9	Unit B3	R-21 Wall + R4	0	Front	300	179	90
Left Exterior Wall 2x6 8	Unit B3	R-21 Wall + R4	90	Left	63	0	90
Rear Exterior Wall 2x6 9	Unit B3	R-21 Wall + R4	180	Back	300	87	90
Right Exterior Wall 2x6 8	Unit B3	R-21 Wall + R4	270	Right	63	24	90

OPAQUE SURFACES

01	02	03	04	05	06	07	08
Name	Zone	Construction	Azimuth	Orientation	Gross Area (ft²)	Window and Door Area (ft2)	Tilt (deg)
Front Exterior Wall 2x6 10	Unit B3	R-21 Wall + R4	0	Front	182	18	90
Left Exterior Wall 2x6 9	Unit B3	R-21 Wall + R4	90	Left	134	28	90
Rear Exterior Wall 2x6 10	Unit B3	R-21 Wall + R4	180	Back	224	54	90
Right Exterior Wall 2x6 9	Unit B3	R-21 Wall + R4	270	Right	134	0	90
Front Exterior Wall 2x6 11	Unit B4	R-21 Wall + R4	0	Front	300	179	90
Left Exterior Wall 2x6 10	Unit B4	R-21 Wall + R4	90	Left	63	0	90
Rear Exterior Wall 2x6 11	Unit B4	R-21 Wall + R4	180	Back	300	87	90
Right Exterior Wall 2x6 10	Unit B4	R-21 Wall + R4	270	Right	63	24	90
Front Exterior Wall 2x6 12	Unit B4	R-21 Wall + R4	0	Front	182	18	90
Left Exterior Wall 2x6 11	Unit B4	R-21 Wall + R4	90	Left	135	28	90
Rear Exterior Wall 2x6 12	Unit B4	R-21 Wall + R4	180	Back	224	54	90
Right Exterior Wall 2x6 11	Unit B4	R-21 Wall + R4	270	Right	134	0	90
Front Exterior Wall 2x6 13	Unit B5	R-21 Wall + R4	0	Front	300	179	90
Left Exterior Wall 2x6 12	Unit B5	R-21 Wall + R4	90	Left	63	0	90
Rear Exterior Wall 2x6 13	Unit B5	R-21 Wall + R4	180	Back	300	87	90

OPAQUE SURFACES

01	02	03	04	05	06	07	08
Name	Zone	Construction	Azimuth	Orientation	Gross Area (ft²)	Window and Door Area (ft2)	Tilt (deg)
Right Exterior Wall 2x6 12	Unit B5	R-21 Wall + R4	270	Right	63	24	90
Front Exterior Wall 2x6 14	Unit B5	R-21 Wall + R4	0	Front	182	18	90
Left Exterior Wall 2x6 13	Unit B5	R-21 Wall + R4	90	Left	135	28	90
Rear Exterior Wall 2x6 14	Unit B5	R-21 Wall + R4	180	Back	224	54	90
Front Exterior Wall 2x6 15	Unit A - ADU	R-21 Wall + R4	0	Front	261	81	90
Left Exterior Wall 2x6 14	Unit A - ADU	R-21 Wall + R4	90	Left	81	0	90
Rear Exterior Wall 2x6 15	Unit A - ADU	R-21 Wall + R4	180	Back	261	87	90
Right Exterior Wall 2x6 13	Unit A - ADU	R-21 Wall + R4	270	Right	324	39	90
Front Exterior Wall 2x6 16	Unit A - ADU	R-21 Wall + R4	0	Front	74	27	90
Rear Exterior Wall 2x6 16	Unit A - ADU	R-21 Wall + R4	180	Back	270	66	90
Right Exterior Wall 2x6 14	Unit A - ADU	R-21 Wall + R4	270	Right	330	67	90
Right Interior Wall	Unit A>>__Garage__	R-15 Garage Fire Wall	n/a	n/a	102	0	n/a
Interior Surface Garage	Unit A>>__Garage__	R-21 Garage Fire Wall	n/a	n/a	382	0	n/a
Left Interior Wall	Unit B>>Unit A	R-0 Wall1	n/a	n/a	306	0	n/a
Right Interior Wall 2	Unit B>>__Garage__	R-15 Garage Fire Wall	n/a	n/a	207	0	n/a
Interior Surface Garage 2	Unit B>>__Garage__	R-15 Garage Fire Wall	n/a	n/a	249	0	n/a
Right Interior Wall 3	Unit B1>>Unit B	R-0 Wall1	n/a	n/a	243	0	n/a

OPAQUE SURFACES

01	02	03	04	05	06	07	08
Name	Zone	Construction	Azimuth	Orientation	Gross Area (ft²)	Window and Door Area (ft2)	Tilt (deg)
Left Interior Wall 2	Unit B1>>__Garage__	R-15 Garage Fire Wall	n/a	n/a	207	0	n/a
Interior Surface Garage 3	Unit B1>>__Garage__	R-15 Garage Fire Wall	n/a	n/a	249	0	n/a
Left Interior Wall 3	Unit B2>>Unit B1	R-0 Wall1	n/a	n/a	243	0	n/a
Right Interior Wall 4	Unit B2>>__Garage__	R-15 Garage Fire Wall	n/a	n/a	205	0	n/a
Interior Surface Garage 4	Unit B2>>__Garage__	R-15 Garage Fire Wall	n/a	n/a	249	0	n/a
Left Interior Wall 4	Unit B3>>Unit B2	R-0 Wall1	n/a	n/a	243	0	n/a
Right Interior Wall 5	Unit B3>>__Garage__	R-15 Garage Fire Wall	n/a	n/a	205	0	n/a
Interior Surface Garage 5	Unit B3>>__Garage__	R-15 Garage Fire Wall	n/a	n/a	249	0	n/a
Left Interior Wall 5	Unit B4>>Unit B3	R-0 Wall1	n/a	n/a	243	0	n/a
Right Interior Wall 6	Unit B4>>__Garage__	R-15 Garage Fire Wall	n/a	n/a	205	0	n/a
Interior Surface Garage 6	Unit B4>>__Garage__	R-15 Garage Fire Wall	n/a	n/a	249	0	n/a
Left Interior Wall 6	Unit B5>>Unit B4	R-0 Wall1	n/a	n/a	243	0	n/a
Right Interior Wall 7	Unit B5>>__Garage__	R-15 Garage Fire Wall	n/a	n/a	243	0	n/a
Right Interior Wall 8	Unit B5>>Unit A - ADU	R-0 Wall1	n/a	n/a	97	0	n/a
Interior Surface Garage 7	Unit B5>>__Garage__	R-15 Garage Fire Wall	n/a	n/a	249	0	n/a
Left Interior Wall 7	Unit A - ADU>>Unit B5	R-0 Wall1	n/a	n/a	243	0	n/a
Left Interior Wall 8	Unit A - ADU>>__Garage__	R-15 Garage Fire Wall	n/a	n/a	97	0	n/a
Interior Surface Garage 8	Unit A - ADU>>__Garage__	R-21 Garage Fire Wall	n/a	n/a	426	0	n/a
Raised Floor	Unit A	R-30 Floor No Crawl Space	n/a	n/a	8	n/a	n/a
Raised Floor 2	Unit B	R-30 Floor No Crawl Space	n/a	n/a	182	n/a	n/a
Raised Floor 3	Unit B1	R-30 Floor No Crawl Space	n/a	n/a	182	n/a	n/a

OPAQUE SURFACES

01	02	03	04	05	06	07	08
Name	Zone	Construction	Azimuth	Orientation	Gross Area (ft²)	Window and Door Area (ft2)	Tilt (deg)
Raised Floor 4	Unit B2	R-30 Floor No Crawl Space	n/a	n/a	182	n/a	n/a
Raised Floor 5	Unit B3	R-30 Floor No Crawl Space	n/a	n/a	182	n/a	n/a
Raised Floor 6	Unit B4	R-30 Floor No Crawl Space	n/a	n/a	182	n/a	n/a
Raised Floor 7	Unit B5	R-30 Floor No Crawl Space	n/a	n/a	182	n/a	n/a
Raised Floor 8	Unit A - ADU	R-30 Floor No Crawl Space	n/a	n/a	42	n/a	n/a
Interior Floor	Unit A	R-0 Floor Over Living Spa	n/a	n/a	632	n/a	n/a
Interior Floor 2	Unit A	R-30 Floor Over Garage	n/a	n/a	271	n/a	n/a
Interior Floor 3	Unit B	R-30 Floor Over Garage	n/a	n/a	252	n/a	n/a
Interior Floor 4	Unit B	R-0 Floor Over Living Spa	n/a	n/a	521	n/a	n/a
Interior Floor 5	Unit B1	R-30 Floor Over Garage	n/a	n/a	252	n/a	n/a
Interior Floor 6	Unit B1	R-0 Floor Over Living Spa	n/a	n/a	521	n/a	n/a
Interior Floor 7	Unit B2	R-30 Floor Over Garage	n/a	n/a	252	n/a	n/a
Interior Floor 8	Unit B2	R-0 Floor Over Living Spa	n/a	n/a	521	n/a	n/a
Interior Floor 9	Unit B3	R-30 Floor Over Garage	n/a	n/a	252	n/a	n/a
Interior Floor 10	Unit B3	R-0 Floor Over Living Spa	n/a	n/a	521	n/a	n/a
Interior Floor 11	Unit B4	R-30 Floor Over Garage	n/a	n/a	252	n/a	n/a
Interior Floor 12	Unit B4	R-0 Floor Over Living Spa	n/a	n/a	521	n/a	n/a
Interior Floor 13	Unit B5	R-30 Floor Over Garage	n/a	n/a	252	n/a	n/a
Interior Floor 14	Unit B5	R-0 Floor Over Living Spa	n/a	n/a	521	n/a	n/a
Interior Floor 15	Unit A - ADU	R-0 Floor Over Living Spa	n/a	n/a	564	n/a	n/a
Interior Floor 16	Unit A - ADU	R-30 Floor Over Garage	n/a	n/a	339	n/a	n/a
Front Exterior Garage 2x6	__Garage__	R-0 Wall	0	Front	120	0	90
Left Exterior Garage 2x6	__Garage__	R-0 Wall	90	Left	12	0	90
Right Exterior Garage 2x4	__Garage__	R-0 Wall	270	Right	134	0	90

OPAQUE SURFACES

01	02	03	04	05	06	07	08
Name	Zone	Construction	Azimuth	Orientation	Gross Area (ft²)	Window and Door Area (ft2)	Tilt (deg)
Front Exterior Garage 2x4	__Garage__	R-0 Wall	0	Front	152	0	90
Right Exterior Garage 2x4 2	__Garage__	R-0 Wall	270	Right	105	0	90
Rear Exterior Garage 2x4	__Garage__	R-0 Wall	180	Back	110	0	90
Front Exterior Garage 2x4 2	__Garage__	R-0 Wall	0	Front	152	0	90
Rear Exterior Garage 2x4 2	__Garage__	R-0 Wall	180	Back	110	0	90
Front Exterior Garage 2x4 3	__Garage__	R-0 Wall	0	Front	152	0	90
Rear Exterior Garage 2x4 3	__Garage__	R-0 Wall	180	Back	110	0	90
Front Exterior Garage 2x4 4	__Garage__	R-0 Wall	0	Front	152	0	90
Rear Exterior Garage 2x4 4	__Garage__	R-0 Wall	180	Back	110	0	90
Front Exterior Garage 2x4 5	__Garage__	R-0 Wall	0	Front	152	0	90
Rear Exterior Garage 2x4 5	__Garage__	R-0 Wall	180	Back	110	0	90
Front Exterior Garage 2x4 6	__Garage__	R-0 Wall	0	Front	152	0	90
Rear Exterior Garage 2x4 6	__Garage__	R-0 Wall	180	Back	110	0	90
Front Exterior Garage 2x6 2	__Garage__	R-0 Wall	0	Front	197	0	90
Right Exterior Garage 2x6	__Garage__	R-0 Wall	270	Right	10	0	90

OPAQUE SURFACES - CATHEDRAL CEILINGS

01	02	03	04	05	06	07	08	09	10	11
Name	Zone	Construction	Azimuth	Orientation	Area (ft²)	Skylight Area (ft²)	Roof Rise (x in 12)	Roof Reflectance	Roof Emittance	Cool Roof
Roof	Unit A	R-30 Roof Cathedral	0	Front	911	0	0.2	0.1	0.85	No
Roof 2	Unit B	R-30 Roof Cathedral	0	Front	955	0	0.2	0.1	0.85	No
Ceiling W/ Deck Above	Unit B	R-30 Ceiling W/ Deck Abov	0	Front	63	0	0	0.1	0.85	No
Roof 3	Unit B1	R-30 Roof Cathedral	0	Front	955	0	0.2	0.1	0.85	No
Ceiling W/ Deck Above 2	Unit B1	R-30 Ceiling W/ Deck Abov	0	Front	63	0	0	0.1	0.85	No
Roof 4	Unit B2	R-30 Roof Cathedral	0	Front	955	0	0.2	0.1	0.85	No
Ceiling W/ Deck Above 3	Unit B2	R-30 Ceiling W/ Deck Abov	0	Front	63	0	0	0.1	0.85	No
Roof 5	Unit B3	R-30 Roof Cathedral	0	Front	955	0	0.2	0.1	0.85	No
Ceiling W/ Deck Above 4	Unit B3	R-30 Ceiling W/ Deck Abov	0	Front	63	0	0	0.1	0.85	No
Roof 6	Unit B4	R-30 Roof Cathedral	0	Front	955	0	0.2	0.1	0.85	No
Ceiling W/ Deck Above 5	Unit B4	R-30 Ceiling W/ Deck Abov	0	Front	63	0	0	0.1	0.85	No
Roof 7	Unit B5	R-30 Roof Cathedral	0	Front	955	0	0.2	0.1	0.85	No
Ceiling W/ Deck Above 6	Unit B5	R-30 Ceiling W/ Deck Abov	0	Front	63	0	0	0.1	0.85	No
Roof 8	Unit A - ADU	R-30 Roof Cathedral	0	Front	945	0	0.2	0.1	0.85	No

FENESTRATION / GLAZING

01	02	03	04	05	06	07	08	09	10	11	12	13	14
Name	Type	Surface	Orientation	Azimuth	Width (ft)	Height (ft)	Mult.	Area (ft²)	U-factor	U-factor Source	SHGC	SHGC Source	Exterior Shading
(2) Window 6 3060SH	Window	Front Exterior Wall 2x6	Front	0			1	36	0.3	NFRC	0.23	NFRC	Bug Screen
(3) Window 5 3060FX	Window	Front Exterior Wall 2x6	Front	0			1	54	0.3	NFRC	0.23	NFRC	Bug Screen
(2) Window 4 3030FX	Window	Front Exterior Wall 2x6	Front	0			1	18	0.3	NFRC	0.23	NFRC	Bug Screen
(3) Window 7 2626FX	Window	Left Exterior Wall 2x6	Left	90			1	19	0.3	NFRC	0.23	NFRC	Bug Screen
(2) Window 8 2626FX	Window	Left Exterior Wall 2x6	Left	90			1	13	0.3	NFRC	0.23	NFRC	Bug Screen
Window 9 2626FX	Window	Left Exterior Wall 2x6	Left	90			1	7	0.3	NFRC	0.23	NFRC	Bug Screen
Window 10 8660SL	Window	Rear Exterior Wall 2x6	Back	180			1	51	0.3	NFRC	0.23	NFRC	Bug Screen
Window 11 6060SL	Window	Rear Exterior Wall 2x6	Back	180			1	36	0.3	NFRC	0.23	NFRC	Bug Screen
Window 4 3030FX	Window	Front Exterior Wall 2x6 2	Front	0			1	9	0.3	NFRC	0.23	NFRC	Bug Screen
Window 5 3060FX	Window	Front Exterior Wall 2x6 2	Front	0			1	18	0.3	NFRC	0.23	NFRC	Bug Screen
Window 1 8650SL	Window	Left Exterior Wall 2x6 2	Left	90			1	43	0.3	NFRC	0.23	NFRC	Bug Screen
Door 2 6080SLD	Window	Rear Exterior Wall 2x6 2	Back	180			1	48	0.3	NFRC	0.23	NFRC	Bug Screen
Window 3 5046SL	Window	Rear Exterior Wall 2x6 2	Back	180			1	23	0.3	NFRC	0.23	NFRC	Bug Screen
Door 1 16080SLD	Window	Front Exterior Wall 2x6 3	Front	0	16	8	1	128	0.3	NFRC	0.23	NFRC	Bug Screen
Window 1 8660SL	Window	Front Exterior Wall 2x6 3	Front	0			1	51	0.3	NFRC	0.23	NFRC	Bug Screen
Window 3056SL	Window	Rear Exterior Wall 2x6 3	Back	180			1	17	0.3	NFRC	0.23	NFRC	Bug Screen
Window 6056SL	Window	Rear Exterior Wall 2x6 3	Back	180			1	33	0.3	NFRC	0.23	NFRC	Bug Screen
Window 5056SL	Window	Rear Exterior Wall 2x6 3	Back	180			1	28	0.3	NFRC	0.23	NFRC	Bug Screen
Window 3626FX	Window	Rear Exterior Wall 2x6 3	Back	180			1	9	0.3	NFRC	0.23	NFRC	Bug Screen
Door A1 3080FR	Window	Right Exterior Wall 2x6 2	Right	270			1	24	0.3	NFRC	0.23	NFRC	Bug Screen
Window 1 4046SL	Window	Front Exterior Wall 2x6 4	Front	0			1	18	0.3	NFRC	0.23	NFRC	Bug Screen
Window 1 2020FX	Window	Left Exterior Wall 2x6 3	Left	90			1	4	0.3	NFRC	0.23	NFRC	Bug Screen
(2) Window 1 6046SL	Window	Rear Exterior Wall 2x6 4	Back	180			1	54	0.3	NFRC	0.23	NFRC	Bug Screen
Door 1 16080SLD 2	Window	Front Exterior Wall 2x6 5	Front	0	16	8	1	128	0.3	NFRC	0.23	NFRC	Bug Screen

FENESTRATION / GLAZING

01	02	03	04	05	06	07	08	09	10	11	12	13	14
Name	Type	Surface	Orientation	Azimuth	Width (ft)	Height (ft)	Mult.	Area (ft²)	U-factor	U-factor Source	SHGC	SHGC Source	Exterior Shading
Window 1 8660SL 2	Window	Front Exterior Wall 2x6 5	Front	0			1	51	0.3	NFRC	0.23	NFRC	Bug Screen
Window 3056SL 2	Window	Rear Exterior Wall 2x6 5	Back	180			1	17	0.3	NFRC	0.23	NFRC	Bug Screen
Window 6056SL 2	Window	Rear Exterior Wall 2x6 5	Back	180			1	33	0.3	NFRC	0.23	NFRC	Bug Screen
Window 5056SL 2	Window	Rear Exterior Wall 2x6 5	Back	180			1	28	0.3	NFRC	0.23	NFRC	Bug Screen
Window 3626FX 2	Window	Rear Exterior Wall 2x6 5	Back	180			1	9	0.3	NFRC	0.23	NFRC	Bug Screen
Door A1 3080FR 2	Window	Right Exterior Wall 2x6 4	Right	270			1	24	0.3	NFRC	0.23	NFRC	Bug Screen
Window 1 4046SL 2	Window	Front Exterior Wall 2x6 6	Front	0			1	18	0.3	NFRC	0.23	NFRC	Bug Screen
Window 1 2020FX 2	Window	Left Exterior Wall 2x6 5	Left	90			1	4	0.3	NFRC	0.23	NFRC	Bug Screen
(2) Window 1 6046SL 2	Window	Rear Exterior Wall 2x6 6	Back	180			1	54	0.3	NFRC	0.23	NFRC	Bug Screen
Door 1 16080SLD 3	Window	Front Exterior Wall 2x6 7	Back	180	16	8	1	128	0.3	NFRC	0.23	NFRC	Bug Screen
Window 1 8660SL 3	Window	Front Exterior Wall 2x6 7	Back	180			1	51	0.3	NFRC	0.23	NFRC	Bug Screen
Window 3056SL 3	Window	Rear Exterior Wall 2x6 7	Back	180			1	17	0.3	NFRC	0.23	NFRC	Bug Screen
Window 6056SL 3	Window	Rear Exterior Wall 2x6 7	Back	180			1	33	0.3	NFRC	0.23	NFRC	Bug Screen
Window 5056SL 3	Window	Rear Exterior Wall 2x6 7	Back	180			1	28	0.3	NFRC	0.23	NFRC	Bug Screen
Window 3626FX 3	Window	Rear Exterior Wall 2x6 7	Back	180			1	9	0.3	NFRC	0.23	NFRC	Bug Screen
Door A1 3080FR 3	Window	Right Exterior Wall 2x6 6	Right	270			1	24	0.3	NFRC	0.23	NFRC	Bug Screen
Window 1 4046SL 3	Window	Front Exterior Wall 2x6 8	Front	0			1	18	0.3	NFRC	0.23	NFRC	Bug Screen
Window 1 2020FX 3	Window	Left Exterior Wall 2x6 7	Left	90			1	4	0.3	NFRC	0.23	NFRC	Bug Screen
(2) Window 1 6046SL 3	Window	Rear Exterior Wall 2x6 8	Back	180			1	54	0.3	NFRC	0.23	NFRC	Bug Screen
Door 1 16080SLD 4	Window	Front Exterior Wall 2x6 9	Front	0	16	8	1	128	0.3	NFRC	0.23	NFRC	Bug Screen
Window 1 8660SL 4	Window	Front Exterior Wall 2x6 9	Front	0			1	51	0.3	NFRC	0.23	NFRC	Bug Screen
Window 3056SL 4	Window	Rear Exterior Wall 2x6 9	Back	180			1	17	0.3	NFRC	0.23	NFRC	Bug Screen
Window 6056SL 4	Window	Rear Exterior Wall 2x6 9	Back	180			1	33	0.3	NFRC	0.23	NFRC	Bug Screen
Window 5056SL 4	Window	Rear Exterior Wall 2x6 9	Back	180			1	28	0.3	NFRC	0.23	NFRC	Bug Screen
Window 3626FX 4	Window	Rear Exterior Wall 2x6 9	Back	180			1	9	0.3	NFRC	0.23	NFRC	Bug Screen

GOUVIS engineering consulting group, inc. ®
15 Studebaker
Irvine
CA 92618

Irvine
tel 949.752.1612
fax 949.752.5321

Palm Springs
tel 760.323.5090

REGISTERED PROFESSIONAL ENGINEER
RADE BABIC
No. M 38573
Exp. 09-30-2023
MECHANICAL
STATE OF CALIFORNIA

DATE SIGNED: 3/16/23

RESTRICTIVE NOTICE

THESE DESIGNS, DRAWINGS, AND SPECIFICATIONS ARE THE EXCLUSIVE PROPERTY OF GOUVIS ENGINEERING CONSULTING GROUP. THEY ARE THE SUBJECTOF COPYRIGHT AND OTHER LEGAL PROTECTION. THEY MAY BE USED ONLY BY THEIR INTENDED RECIPIENT AND ONLY FOR THE PROJECT DEPICTED HEREIN. NO PART OF THESE DRAWINGS ARE TO BE COPIED, TRANSFERRED, REPRODUCED, NOR CAN THEY BE USED, IN WHOLE OR IN PART, BY ANY OTHER PERSON OR FOR ANY OTHER PROJECT OR STRUCTURE, WITHOUT THE PRIOR EXPRESS WRITTEN CONSENT OF GOUVIS ENGINEERING CONSULTING GROUP

© 2017 GOUVIS ENGINEERING CONSULTING GROUP INC. - ALL RIGHTS RESERVED

PROJECT:
Tenant Square

DEVELOPER:
Osito Holdings LLC

ARCHITECT:
Gary Moore & Associates

LOCATION:
Morgan Hill
Santa Clara
CA

REVISIONS

NO.	DATE	DESCRIPTION
1	02/02/23	PLAN CHECK

SHEET NAME:
TITLE 24 ENERGY COMPLIANCE FORMS BUILDING B

PROJECT NUMBER:
66074

ENGINEER:

DRAFTER:

SHEET NUMBER:
T24-3

ISSUED DATE:XX/XX/XX

FENESTRATION / GLAZING

01	02	03	04	05	06	07	08	09	10	11	12	13	14
Name	Type	Surface	Orientation	Azimuth	Width (ft)	Height (ft)	Mult.	Area (ft^2)	U-factor	U-factor Source	SHGC	SHGC Source	Exterior Shading
Door A1 3080FR 4	Window	Right Exterior Wall 2x6 8	Right	270			1	24	0.3	NFRC	0.23	NFRC	Bug Screen
Window 1 4046SL 4	Window	Front Exterior Wall 2x6 10	Front	0			1	18	0.3	NFRC	0.23	NFRC	Bug Screen
Window 1 2020FX 4	Window	Left Exterior Wall 2x6 9	Left	90			1	4	0.3	NFRC	0.23	NFRC	Bug Screen
(2) Window 1 6046SL 4	Window	Rear Exterior Wall 2x6 10	Back	180			1	54	0.3	NFRC	0.23	NFRC	Bug Screen
Door 1 16080SLD 5	Window	Front Exterior Wall 2x6 11	Front	0	16	8	1	128	0.3	NFRC	0.23	NFRC	Bug Screen
Window 1 8660SL 5	Window	Front Exterior Wall 2x6 11	Front	0			1	51	0.3	NFRC	0.23	NFRC	Bug Screen
Window 3056SL 5	Window	Rear Exterior Wall 2x6 11	Back	180			1	17	0.3	NFRC	0.23	NFRC	Bug Screen
Window 6056SL 5	Window	Rear Exterior Wall 2x6 11	Back	180			1	33	0.3	NFRC	0.23	NFRC	Bug Screen
Window 5056SL 5	Window	Rear Exterior Wall 2x6 11	Back	180			1	28	0.3	NFRC	0.23	NFRC	Bug Screen
Window 3626FX 5	Window	Rear Exterior Wall 2x6 11	Back	180			1	9	0.3	NFRC	0.23	NFRC	Bug Screen
Door A1 3080FR 5	Window	Right Exterior Wall 2x6 10	Right	270			1	24	0.3	NFRC	0.23	NFRC	Bug Screen
Window 1 4046SL 5	Window	Front Exterior Wall 2x6 12	Front	0			1	18	0.3	NFRC	0.23	NFRC	Bug Screen
Window 1 2020FX 5	Window	Left Exterior Wall 2x6 11	Left	90			1	4	0.3	NFRC	0.23	NFRC	Bug Screen
(2) Window 1 6046SL 5	Window	Rear Exterior Wall 2x6 12	Back	180			1	54	0.3	NFRC	0.23	NFRC	Bug Screen
Door 1 16080SLD 6	Window	Front Exterior Wall 2x6 13	Front	0	16	8	1	128	0.3	NFRC	0.23	NFRC	Bug Screen
Window 1 8660SL 6	Window	Front Exterior Wall 2x6 13	Front	0			1	51	0.3	NFRC	0.23	NFRC	Bug Screen
Window 3056SL 6	Window	Rear Exterior Wall 2x6 13	Back	180			1	17	0.3	NFRC	0.23	NFRC	Bug Screen
Window 6056SL 6	Window	Rear Exterior Wall 2x6 13	Back	180			1	33	0.3	NFRC	0.23	NFRC	Bug Screen
Window 5056SL 6	Window	Rear Exterior Wall 2x6 13	Back	180			1	28	0.3	NFRC	0.23	NFRC	Bug Screen
Window 3626FX 6	Window	Rear Exterior Wall 2x6 13	Back	180			1	9	0.3	NFRC	0.23	NFRC	Bug Screen
Door A1 3080FR 6	Window	Right Exterior Wall 2x6 12	Right	270			1	24	0.3	NFRC	0.23	NFRC	Bug Screen
Window 1 4046SL 6	Window	Front Exterior Wall 2x6 14	Front	0			1	18	0.3	NFRC	0.23	NFRC	Bug Screen
Window 1 2020FX 6	Window	Left Exterior Wall 2x6 13	Left	90			1	4	0.3	NFRC	0.23	NFRC	Bug Screen
(2) Window 1 6046SL 6	Window	Rear Exterior Wall 2x6 14	Back	180			1	54	0.3	NFRC	0.23	NFRC	Bug Screen
(2) Window 6 3060SH 2	Window	Front Exterior Wall 2x6 15	Front	0			1	36	0.3	NFRC	0.23	NFRC	Bug Screen

FENESTRATION / GLAZING

01	02	03	04	05	06	07	08	09	10	11	12	13	14
Name	Type	Surface	Orientation	Azimuth	Width (ft)	Height (ft)	Mult.	Area (ft^2)	U-factor	U-factor Source	SHGC	SHGC Source	Exterior Shading
(2) Window 5 3060FX	Window	Front Exterior Wall 2x6 15	Front	0			1	36	0.3	NFRC	0.23	NFRC	Bug Screen
Window 4 3030FX 2	Window	Front Exterior Wall 2x6 15	Front	0			1	9	0.3	NFRC	0.23	NFRC	Bug Screen
Window 10 8660SL 2	Window	Rear Exterior Wall 2x6 15	Back	180			1	51	0.3	NFRC	0.23	NFRC	Bug Screen
Window 11 6060SL 2	Window	Rear Exterior Wall 2x6 15	Back	180			1	36	0.3	NFRC	0.23	NFRC	Bug Screen
(3) Window 7 2626FX 2	Window	Right Exterior Wall 2x6 13	Right	270			1	19	0.3	NFRC	0.23	NFRC	Bug Screen
(2) Window 8 2626FX 2	Window	Right Exterior Wall 2x6 13	Right	270			1	13	0.3	NFRC	0.23	NFRC	Bug Screen
Window 9 2626FX 2	Window	Right Exterior Wall 2x6 13	Right	270			1	7	0.3	NFRC	0.23	NFRC	Bug Screen
Window 4 3030FX 3	Window	Front Exterior Wall 2x6 16	Front	0			1	9	0.3	NFRC	0.23	NFRC	Bug Screen
Window 5 3060FX 2	Window	Front Exterior Wall 2x6 16	Front	0			1	18	0.3	NFRC	0.23	NFRC	Bug Screen
Door 2 6080SLD	Window	Rear Exterior Wall 2x6 16	Back	180			1	48	0.3	NFRC	0.23	NFRC	Bug Screen
Window 3 4046SL	Window	Rear Exterior Wall 2x6 16	Back	180			1	18	0.3	NFRC	0.23	NFRC	Bug Screen
Window 1 8650SL 2	Window	Right Exterior Wall 2x6 14	Right	270			1	43	0.3	NFRC	0.23	NFRC	Bug Screen

OPAQUE DOORS

01	02	03	04
Name	Side of Building	Area (ft^2)	U-factor
Door A1 3080SC	Left Exterior Wall 2x6 2	24	0.2
Door A1 3080SCDR	Left Exterior Wall 2x6 3	24	0.2
Door A1 3080SCDR 2	Left Exterior Wall 2x6 5	24	0.2
Door A1 3080SCDR 3	Left Exterior Wall 2x6 7	24	0.2
Door A1 3080SCDR 4	Left Exterior Wall 2x6 9	24	0.2
Door A1 3080SCDR 5	Left Exterior Wall 2x6 11	24	0.2
Door A1 3080SCDR 6	Left Exterior Wall 2x6 13	24	0.2
Door A1 3080SC 2	Right Exterior Wall 2x6 14	24	0.2

OVERHANGS AND FINS

01	02	03	04	05	06	07	08	09	10	11	12	13	14
Window	Overhang					Left Fin				Right Fin			
	Depth	Dist Up	Left Extent	Right Extent	Flap Ht.	Depth	Top Up	Dist L	Bot Up	Depth	Top Up	Dist R	Bot Up
Door 1 16080SLD	19	1.3	1.55	1.42	0	0	0	0	0	0	0	0	0
Door 1 16080SLD 2	19	1.3	1.55	1.42	0	0	0	0	0	0	0	0	0
Door 1 16080SLD 3	19	1.3	1.55	1.42	0	0	0	0	0	0	0	0	0
Door 1 16080SLD 4	19	1.3	1.55	1.42	0	0	0	0	0	0	0	0	0
Door 1 16080SLD 5	19	1.3	1.55	1.42	0	0	0	0	0	0	0	0	0
Door 1 16080SLD 6	19	1.3	1.55	1.42	0	0	0	0	0	0	0	0	0

SLAB FLOORS

01	02	03	04	05	06	07	08
Name	Zone	Area (ft^2)	Perimeter (ft)	Edge Insul. R-value and Depth	Edge Insul. R-value and Depth	Carpeted Fraction	Heated
Slab-on-Grade	Unit A	632	86	none	0	80%	No
Slab-on-Grade 2	Unit B	584	89	none	0	80%	No
Slab-on-Grade 3	Unit B1	584	89	none	0	80%	No
Slab-on-Grade 4	Unit B2	584	89	none	0	80%	No
Slab-on-Grade 5	Unit B3	584	89	none	0	80%	No
Slab-on-Grade 6	Unit B4	584	89	none	0	80%	No
Slab-on-Grade 7	Unit B5	584	89	none	0	80%	No

SLAB FLOORS

01	02	03	04	05	06	07	08
Name	Zone	Area (ft^2)	Perimeter (ft)	Edge Insul. R-value and Depth	Edge Insul. R-value and Depth	Carpeted Fraction	Heated
Slab-on-Grade 8	Unit A - ADU	564	78	none	0	80%	No
Slab-on-Grade 9	__Garage__	271	27	none	0	0%	No
Slab-on-Grade 10	__Garage__	252	48	none	0	0%	No
Slab-on-Grade 11	__Garage__	252	48	none	0	0%	No
Slab-on-Grade 12	__Garage__	252	48	none	0	0%	No
Slab-on-Grade 13	__Garage__	252	48	none	0	0%	No
Slab-on-Grade 14	__Garage__	252	48	none	0	0%	No
Slab-on-Grade 15	__Garage__	252	48	none	0	0%	No
Slab-on-Grade 16	__Garage__	339	35	none	0	0%	No

OPAQUE SURFACE CONSTRUCTIONS

01	02	03	04	05	06	07	08
Construction Name	Surface Type	Construction Type	Framing	Total Cavity R-value	Interior / Exterior Continuous R-value	U-factor	Assembly Layers
R-0 Wall	Exterior Walls	Wood Framed Wall	2x4 @ 16 in. O. C.	R-0	None / None	0.361	Inside Finish: Gypsum Board Cavity / Frame: no insul. / 2x4 Exterior Finish: 3 Coat Stucco
R-21 Wall + R4	Exterior Walls	Wood Framed Wall	2x6 @ 16 in. O. C.	R-21	None / R-4	0.051	Inside Finish: Gypsum Board Cavity / Frame: R-21 / 2x6 Sheathing / Insulation: R-4 Sheathing Exterior Finish: 3 Coat Stucco

OPAQUE SURFACE CONSTRUCTIONS

01	02	03	04	05	06	07	08
Construction Name	Surface Type	Construction Type	Framing	Total Cavity R-value	Interior / Exterior Continuous R-value	U-factor	Assembly Layers
R-30 Roof Cathedral	Cathedral Ceilings	Wood Framed Ceiling	2x12 @ 16 in. O. C.	R-0	R-30 / None	0.03	Roofing: Light Roof (Asphalt Shingle) Roof Deck: Wood Siding/sheathing/decking Cavity / Frame: no insul. / 2x12 Sheathing / Insulation: R-30 Sheathing Inside Finish: Gypsum Board
R-30 Ceiling W/ Deck Abov	Cathedral Ceilings	Wood Framed Ceiling	2x12 @ 16 in. O. C.	R-30	None / None	0.036	Roofing: Light Roof (Asphalt Shingle) Roof Deck: Wood Siding/sheathing/decking Cavity / Frame: R-30 / 2x12 Inside Finish: Gypsum Board
R-15 Garage Fire Wall	Interior Walls	Wood Framed Wall	2x4 @ 16 in. O. C.	R-15	None / None	0.086	Inside Finish: Gypsum Board Cavity / Frame: R-15 / 2x4 Other Side Finish: Gypsum Board
R-21 Garage Fire Wall	Interior Walls	Wood Framed Wall	2x4 @ 16 in. O. C.	R-21	None / None	0.075	Inside Finish: Gypsum Board Cavity / Frame: R-21 / 2x4 Other Side Finish: Gypsum Board
R-0 Wall1	Interior Walls	Wood Framed Wall	2x4 @ 16 in. O. C.	R-0	None / None	0.277	Inside Finish: Gypsum Board Cavity / Frame: no insul. / 2x4 Other Side Finish: Gypsum Board
R-30 Floor No Crawl Space	Exterior Floors	Wood Framed Floor	2x10 @ 16 in. O. C.	R-30	None / None	0.034	Floor Surface: Carpeted Floor Deck: Wood Siding/sheathing/decking Cavity / Frame: R-30 / 2x10
R-0 Floor Over Living Spa	Interior Floors	Wood Framed Floor	2x12 @ 16 in. O. C.	R-0	None / None	0.196	Floor Surface: Carpeted Floor Deck: Wood Siding/sheathing/decking Cavity / Frame: no insul. / 2x12 Ceiling Below Finish: Gypsum Board

OPAQUE SURFACE CONSTRUCTIONS

01	02	03	04	05	06	07	08
Construction Name	Surface Type	Construction Type	Framing	Total Cavity R-value	Interior / Exterior Continuous R-value	U-factor	Assembly Layers
R-30 Floor Over Garage	Interior Floors	Wood Framed Floor	2x12 @ 16 in. O. C.	R-30	None / None	0.032	Floor Surface: Carpeted Floor Deck: Wood Siding/sheathing/decking Cavity / Frame: R-30 / 2x12 Ceiling Below Finish: Gypsum Board

BUILDING ENVELOPE - HERS VERIFICATION

01	02	03	04
Quality Insulation Installation (QII)	High R-value Spray Foam Insulation	Building Envelope Air Leakage	CFM50
Required	Not Required	Not Required	n/a

WATER HEATING SYSTEMS

01	02	03	04	05	06	07	08	09
Name	System Type	Number of Systems in Building	Multi-Family Distribution Type	Dwelling Unit Distribution Type	Water Heater Name (#)	Solar Heating System	Compact Distribution	HERS Verification
DHW Sys 1	Domestic Hot Water (DHW)	8	n/a	Standard Distribution System	DHW Heater 1 (1)	n/a	None	n/a

WATER HEATERS

01	02	03	04	05	06	07	08	09	10	11	12
Name	Heating Element Type	Tank Type	# of Units	Tank Vol. (gal)	Energy Factor or Efficiency	Input Rating or Pilot	Tank Insulation R-value (Int/Ext)	Standby Loss or Recovery Eff	1st Hr. Rating or Flow Rate	NEEA Heat Pump Brand or Model	Tank Location or Ambient Condition
DHW Heater 1	Heat Pump	n/a	8	80	NEEA Rated	<= 12 kW	n/a	n/a	n/a	Ruud\PROUH80 T2 RU37530 (80 gal)	Garage

WATER HEATING - HERS VERIFICATION

01	02	03	04	05	06	07	08
Name	Pipe Insulation	Parallel Piping	Compact Distribution	Compact Distribution Type	Recirculation Control	Central DHW Distribution	Shower Drain Water Heat Recovery
DDU-1 Unit A | DHW Sys 1	Not Required	Not Required	Not Required	None	Not Required	Not Required	Not Required
DDU-2 Unit B | DHW Sys 1	Not Required	Not Required	Not Required	None	Not Required	Not Required	Not Required
DDU-3 Unit B | DHW Sys 1	Not Required	Not Required	Not Required	None	Not Required	Not Required	Not Required
DDU-4 Unit B | DHW Sys 1	Not Required	Not Required	Not Required	None	Not Required	Not Required	Not Required
DDU-5 Unit B | DHW Sys 1	Not Required	Not Required	Not Required	None	Not Required	Not Required	Not Required
DDU-6 Unit B | DHW Sys 1	Not Required	Not Required	Not Required	None	Not Required	Not Required	Not Required
DDU-7 Unit B | DHW Sys 1	Not Required	Not Required	Not Required	None	Not Required	Not Required	Not Required
DDU-8 Unit A (R) | DHW Sys 1	Not Required	Not Required	Not Required	None	Not Required	Not Required	Not Required

SPACE CONDITIONING SYSTEMS

01	02	03	04	05	06	07	08	09	10	11
Name	System Type	Heating Unit Name	Cooling Unit Name	Fan Name	Distribution Name	Required Thermostat Type	Status	Verified Existing Condition	Heating Equipment Count	Cooling Equipment Count
DDU-1 Unit A | :Heat Pump System 1:Air Distribution System 1:HVAC Fan 1:2:3	Heat pump heating cooling	Heat Pump System 1	Heat Pump System 1	HVAC Fan 1	Air Distribution System 1	Setback	New	NA	1	1
DDU-2 Unit B | :Heat Pump System 2:Air Distribution System 2:HVAC Fan 2:2:3	Heat pump heating cooling	Heat Pump System 2	Heat Pump System 2	HVAC Fan 2	Air Distribution System 2	Setback	New	NA	1	1

SPACE CONDITIONING SYSTEMS

01	02	03	04	05	06	07	08	09	10	11
Name	System Type	Heating Unit Name	Cooling Unit Name	Fan Name	Distribution Name	Required Thermostat Type	Status	Verified Existing Condition	Heating Equipment Count	Cooling Equipment Count
DDU-3 Unit B | :Heat Pump System 3:Air Distribution System 3:HVAC Fan 3:2:3	Heat pump heating cooling	Heat Pump System 3	Heat Pump System 3	HVAC Fan 3	Air Distribution System 3	Setback	New	NA	1	1
DDU-4 Unit B | :Heat Pump System 4:Air Distribution System 4:HVAC Fan 4:2:3	Heat pump heating cooling	Heat Pump System 4	Heat Pump System 4	HVAC Fan 4	Air Distribution System 4	Setback	New	NA	1	1
DDU-5 Unit B | :Heat Pump System 5:Air Distribution System 5:HVAC Fan 5:2:3	Heat pump heating cooling	Heat Pump System 5	Heat Pump System 5	HVAC Fan 5	Air Distribution System 5	Setback	New	NA	1	1
DDU-6 Unit B | :Heat Pump System 6:Air Distribution System 6:HVAC Fan 6:2:3	Heat pump heating cooling	Heat Pump System 6	Heat Pump System 6	HVAC Fan 6	Air Distribution System 6	Setback	New	NA	1	1
DDU-7 Unit B | :Heat Pump System 7:Air Distribution System 7:HVAC Fan 7:2:3	Heat pump heating cooling	Heat Pump System 7	Heat Pump System 7	HVAC Fan 7	Air Distribution System 7	Setback	New	NA	1	1
DDU-8 Unit A (R) | :Heat Pump System 8:Air Distribution System 8:HVAC Fan 8:2:3	Heat pump heating cooling	Heat Pump System 8	Heat Pump System 8	HVAC Fan 8	Air Distribution System 8	Setback	New	NA	1	1

HVAC - HEAT PUMPS

01	02	03	04	05	06	07	08	09	10	11
Name	System Type	Number of Units	Heating			Cooling		Zonally Controlled	Compressor Type	HERS Verification
			HSPF/COP	Cap 47	Cap 17	SEER	EER/CEER			
Heat Pump System 1	Central split HP	1	8.5	35000	27500	14.5	12.5	Not Zonal	Single Speed	Heat Pump System 1-hers-htpump

HVAC - HEAT PUMPS

01	02	03	04	05	06	07	08	09	10	11
Name	System Type	Number of Units	Heating			Cooling		Zonally Controlled	Compressor Type	HERS Verification
			HSPF/COP	Cap 47	Cap 17	SEER	EER/CEER			
Heat Pump System 2	Central split HP	1	8.5	35000	27500	14.5	12.5	Not Zonal	Single Speed	Heat Pump System 2-hers-htpump
Heat Pump System 3	Central split HP	1	8.5	35000	27500	14.5	12.5	Not Zonal	Single Speed	Heat Pump System 3-hers-htpump
Heat Pump System 4	Central split HP	1	8.5	35000	27500	14.5	12.5	Not Zonal	Single Speed	Heat Pump System 4-hers-htpump
Heat Pump System 5	Central split HP	1	8.5	35000	27500	14.5	12.5	Not Zonal	Single Speed	Heat Pump System 5-hers-htpump
Heat Pump System 6	Central split HP	1	8.5	35000	27500	14.5	12.5	Not Zonal	Single Speed	Heat Pump System 6-hers-htpump
Heat Pump System 7	Central split HP	1	8.5	35000	27500	14.5	12.5	Not Zonal	Single Speed	Heat Pump System 7-hers-htpump
Heat Pump System 8	Central split HP	1	8.5	35000	27500	14.5	12.5	Not Zonal	Single Speed	Heat Pump System 8-hers-htpump

HVAC HEAT PUMPS - HERS VERIFICATION

01	02	03	04	05	06	07	08	09
Name	Verified Airflow	Airflow Target	Verified EER	Verified SEER	Verified Refrigerant Charge	Verified HSPF	Verified Heating Cap 47	Verified Heating Cap 17
Heat Pump System 1-hers-htpump	Required	350	Required	Required	Yes	Yes	Yes	Yes
Heat Pump System 2-hers-htpump	Required	350	Required	Required	Yes	Yes	Yes	Yes
Heat Pump System 3-hers-htpump	Required	350	Required	Required	Yes	Yes	Yes	Yes

HVAC HEAT PUMPS - HERS VERIFICATION

01	02	03	04	05	06	07	08	09
Name	Verified Airflow	Airflow Target	Verified EER	Verified SEER	Verified Refrigerant Charge	Verified HSPF	Verified Heating Cap 47	Verified Heating Cap 17
Heat Pump System 4-hers-htpump	Required	350	Required	Required	Yes	Yes	Yes	Yes
Heat Pump System 5-hers-htpump	Required	350	Required	Required	Yes	Yes	Yes	Yes
Heat Pump System 6-hers-htpump	Required	350	Required	Required	Yes	Yes	Yes	Yes
Heat Pump System 7-hers-htpump	Required	350	Required	Required	Yes	Yes	Yes	Yes
Heat Pump System 8-hers-htpump	Required	350	Required	Required	Yes	Yes	Yes	Yes

HVAC - DISTRIBUTION SYSTEMS

01	02	03	04	05	06	07	08	09	10	11	12
			Duct Ins. R-value		Duct Location		Surface Area				
Name	Type	Design Type	Supply	Return	Supply	Return	Supply	Return	Bypass Duct	Duct Leakage	HERS Verification
Air Distribution System 1	Conditioned space-entirely	Non-Verified	R-6	R-6	Conditioned Zone	Conditioned Zone	n/a	n/a	No Bypass Duct		Air Distribution System 1-hers-dist
Air Distribution System 2	Conditioned space-entirely	Non-Verified	R-6	R-6	Conditioned Zone	Conditioned Zone	n/a	n/a	No Bypass Duct		Air Distribution System 2-hers-dist
Air Distribution System 3	Conditioned space-entirely	Non-Verified	R-6	R-6	Conditioned Zone	Conditioned Zone	n/a	n/a	No Bypass Duct		Air Distribution System 3-hers-dist

HVAC - DISTRIBUTION SYSTEMS

01	02	03	04	05	06	07	08	09	10	11	12
			Duct Ins. R-value		Duct Location		Surface Area				
Name	Type	Design Type	Supply	Return	Supply	Return	Supply	Return	Bypass Duct	Duct Leakage	HERS Verification
Air Distribution System 4	Conditioned space-entirely	Non-Verified	R-6	R-6	Conditioned Zone	Conditioned Zone	n/a	n/a	No Bypass Duct		Air Distribution System 4-hers-dist
Air Distribution System 5	Conditioned space-entirely	Non-Verified	R-6	R-6	Conditioned Zone	Conditioned Zone	n/a	n/a	No Bypass Duct		Air Distribution System 5-hers-dist
Air Distribution System 6	Conditioned space-entirely	Non-Verified	R-6	R-6	Conditioned Zone	Conditioned Zone	n/a	n/a	No Bypass Duct		Air Distribution System 6-hers-dist
Air Distribution System 7	Conditioned space-entirely	Non-Verified	R-6	R-6	Conditioned Zone	Conditioned Zone	n/a	n/a	No Bypass Duct		Air Distribution System 7-hers-dist
Air Distribution System 8	Conditioned space-entirely	Non-Verified	R-6	R-6	Conditioned Zone	Conditioned Zone	n/a	n/a	No Bypass Duct		Air Distribution System 8-hers-dist

HVAC DISTRIBUTION - HERS VERIFICATION

01	02	03	04	05	06	07	08	09
Name	Duct Leakage Verification	Duct Leakage Target (%)	Verified Duct Location	Verified Duct Design	Buried Ducts	Deeply Buried Ducts	Low-leakage Air Handler	Low Leakage Ducts Entirely in Conditioned Space
Air Distribution System 1-hers-dist	Yes	5.0	Required	Not Required	Not Required	Credit not taken	Required	No
Air Distribution System 2-hers-dist	Yes	5.0	Required	Not Required	Not Required	Credit not taken	Required	No
Air Distribution System 3-hers-dist	Yes	5.0	Required	Not Required	Not Required	Credit not taken	Required	No
Air Distribution System 4-hers-dist	Yes	5.0	Required	Not Required	Not Required	Credit not taken	Required	No
Air Distribution System 5-hers-dist	Yes	5.0	Required	Not Required	Not Required	Credit not taken	Required	No
Air Distribution System 6-hers-dist	Yes	5.0	Required	Not Required	Not Required	Credit not taken	Required	No
Air Distribution System 7-hers-dist	Yes	5.0	Required	Not Required	Not Required	Credit not taken	Required	No
Air Distribution System 8-hers-dist	Yes	5.0	Required	Not Required	Not Required	Credit not taken	Required	No

HVAC - FAN SYSTEMS

01	02	03	04
Name	Type	Fan Power (Watts/CFM)	Name
HVAC Fan 1	HVAC Fan	0.5	HVAC Fan 1-hers-fan
HVAC Fan 2	HVAC Fan	0.45	HVAC Fan 2-hers-fan

HVAC - FAN SYSTEMS

01	02	03	04
Name	Type	Fan Power (Watts/CFM)	Name
HVAC Fan 3	HVAC Fan	0.45	HVAC Fan 3-hers-fan
HVAC Fan 4	HVAC Fan	0.45	HVAC Fan 4-hers-fan
HVAC Fan 5	HVAC Fan	0.45	HVAC Fan 5-hers-fan
HVAC Fan 6	HVAC Fan	0.45	HVAC Fan 6-hers-fan
HVAC Fan 7	HVAC Fan	0.45	HVAC Fan 7-hers-fan
HVAC Fan 8	HVAC Fan	0.45	HVAC Fan 8-hers-fan

HVAC FAN SYSTEMS - HERS VERIFICATION

01	02	03
Name	Verified Fan Watt Draw	Required Fan Efficacy (Watts/CFM)
HVAC Fan 1-hers-fan	Required	0.5
HVAC Fan 2-hers-fan	Required	0.45
HVAC Fan 3-hers-fan	Required	0.45
HVAC Fan 4-hers-fan	Required	0.45
HVAC Fan 5-hers-fan	Required	0.45
HVAC Fan 6-hers-fan	Required	0.45
HVAC Fan 7-hers-fan	Required	0.45
HVAC Fan 8-hers-fan	Required	0.45

IAQ (INDOOR AIR QUALITY) FANS

01	02	03	04	05	06	07
Dwelling Unit	IAQ CFM	IAQ Watts/CFM	IAQ Fan Type	IAQ Recovery Effectiveness - SRE	IAQ Recovery Effectiveness - ASRE	HERS Verification
DDU-1 Unit A 1/1	76	0.35	Exhaust	n/a	n/a	Yes

IAQ (INDOOR AIR QUALITY) FANS

01	02	03	04	05	06	07
Dwelling Unit	IAQ CFM	IAQ Watts/CFM	IAQ Fan Type	IAQ Recovery Effectiveness - SRE	IAQ Recovery Effectiveness - ASRE	HERS Verification
DDU-2 Unit B 1/1	76	0.35	Exhaust	n/a	n/a	Yes
DDU-3 Unit B 1/1	76	0.35	Exhaust	n/a	n/a	Yes
DDU-4 Unit B 1/1	76	0.35	Exhaust	n/a	n/a	Yes
DDU-5 Unit B 1/1	76	0.35	Exhaust	n/a	n/a	Yes
DDU-6 Unit B 1/1	76	0.35	Exhaust	n/a	n/a	Yes
DDU-7 Unit B 1/1	76	0.35	Exhaust	n/a	n/a	Yes
DDU-8 Unit A (R) 1/1	75	0.35	Exhaust	n/a	n/a	Yes

DOCUMENTATION AUTHOR'S DECLARATION STATEMENT

1. I certify that this Certificate of Compliance documentation is accurate and complete.

Documentation Author Name: Ken La	Documentation Author Signature: Ken La
Company: Gouvis Engineering Consulting Group	Signature Date: 03/16/2023
Address: 15 Studebaker	CEA/ HERS Certification Identification (If applicable):
City/State/Zip: Irvine, CA 92618	Phone: 949-752-1612

RESPONSIBLE PERSON'S DECLARATION STATEMENT

I certify the following under penalty of perjury, under the laws of the State of California:

1. I am eligible under Division 3 of the Business and Professions Code to accept responsibility for the building design identified on this Certificate of Compliance.
2. I certify that the energy features and performance specifications identified on this Certificate of Compliance conform to the requirements of Title 24, Part 1 and Part 6 of the California Code of Regulations.
3. The building design features or system design features identified on this Certificate of Compliance are consistent with the information provided on other applicable compliance documents, worksheets, calculations, plans and specifications submitted to the enforcement agency for approval with this building permit application.

Responsible Designer Name: Ken La	Responsible Designer Signature: Ken La
Company: Gouvis Engineering Consulting Group	Date Signed: 03/16/2023
Address: 15 Studebaker	License:
City/State/Zip: Irvine, CA 92618	Phone: 949-752-1612

Digitally signed by ConSol Home Energy Efficiency Rating System Services, Inc. (CHEERS). This digital signature is provided in order to secure the content of this registered document, and in no way implies Registration Provider responsibility for the accuracy of the information.

GOUVIS engineering consulting group, inc.®
15 Studebaker
Irvine
CA 92618

Irvine
tel 949.752.1612
fax 949.752.5321

Palm Springs
tel 760.323.5090

REGISTERED PROFESSIONAL ENGINEER
RADE BABIC
No. M 38573
Exp. 09-30-2023
MECHANICAL
STATE OF CALIFORNIA

DATE SIGNED: 3/16/23

RESTRICTIVE NOTICE

THESE DESIGNS, DRAWINGS, AND SPECIFICATIONS ARE THE EXCLUSIVE PROPERTY OF GOUVIS ENGINEERING CONSULTING GROUP. THEY ARE THE SUBJECTOF COPYRIGHT AND OTHER LEGAL PROTECTION. THEY MAY BE USED ONLY BY THEIR INTENDED RECIPIENT AND ONLY FOR THE PROJECT DEPICTED HEREIN. NO PART OF THESE DRAWINGS ARE TO BE COPIED, TRANSFERRED, REPRODUCED, NOR CAN THEY BE USED, IN WHOLE OR IN PART, BY ANY OTHER PERSON OR FOR ANY OTHER PROJECT OR STRUCTURE, WITHOUT THE PRIOR EXPRESS WRITTEN CONSENT OF GOUVIS ENGINEERING CONSULTING GROUP

© 2017 GOUVIS ENGINEERING CONSULTING GROUP INC. - ALL RIGHTS RESERVED

PROJECT:
Tenant Square

DEVELOPER:
Osito Holdings LLC

ARCHITECT:
Gary Moore & Associates

LOCATION:
Morgan Hill
Santa Clara
CA

REVISIONS

NO.	DATE	DESCRIPTION
1	02/02/23	PLAN CHECK

SHEET NAME:
TITLE 24 ENERGY COMPLIANCE FORMS BUILDING B CON'T

PROJECT NUMBER:
66074

ENGINEER:

DRAFTER:

SHEET NUMBER:
T24-4

ISSUED DATE:XX/XX/XX

2019 Low-Rise Residential Mandatory Measures Summary

§ 150.0(k)2G:	**Interior Switches and Controls.** An energy management control system (EMCS) may be used to comply with control requirements if it: provides functionality of the specified control according to § 110.9; meets the Installation Certificate requirements of § 130.4; meets the EMCS requirements of § 130.0(e); and meets all other requirements in § 150.0(k)2.
§ 150.0(k)2H:	**Interior Switches and Controls.** A multiscene programmable controller may be used to comply with dimmer requirements in § 150.0(k) if it provides the functionality of a dimmer according to § 110.9, and complies with all other applicable requirements in § 150.0(k)2.
§ 150.0(k)2I:	**Interior Switches and Controls.** In bathrooms, garages, laundry rooms, and utility rooms, at least one luminaire in each of these spaces must be controlled by an occupant sensor or a vacancy sensor providing automatic-off functionality. If an occupant sensor is installed, it must be initially configured to manual-on operation using the manual control required under Section 150.0(k)2C.
§ 150.0(k)2J:	**Interior Switches and Controls.** Luminaires that are or contain light sources that meet Reference Joint Appendix JA8 requirements for dimming, and that are not controlled by occupancy or vacancy sensors, must have dimming controls.*
§ 150.0(k)2K:	**Interior Switches and Controls.** Under cabinet lighting must be controlled separately from ceiling-installed lighting systems.
§ 150.0(k)3A:	**Residential Outdoor Lighting.** For single-family residential buildings, outdoor lighting permanently mounted to a residential building, or to other buildings on the same lot, must meet the requirement in item § 150.0(k)3Ai (ON and OFF switch) and the requirements in either § 150.0(k)3Aii (photocell and either a motion sensor or automatic time switch control) or § 150.0(k)3Aiii (astronomical time clock), or an EMCS.
§ 150.0(k)3B:	**Residential Outdoor Lighting.** For low-rise residential buildings with four or more dwelling units, outdoor lighting for private patios, entrances, balconies, and porches; and residential parking lots and carports with less than eight vehicles per site must comply with either Section 150.0(k)3A or with the applicable requirements in Sections 110.9, 130.0, 130.2, 130.4, 140.7 and 141.0.
§ 150.0(k)3C:	**Residential Outdoor Lighting.** For low-rise residential buildings with four or more dwelling units, any outdoor lighting for residential parking lots or carports with a total of eight or more vehicles per site and any outdoor lighting not regulated by Section 150.0(k)3B or Section 150.0(k)3D must comply with the applicable requirements in Sections 110.9, 130.0, 130.2, 130.4, 140.7 and 141.0.
§ 150.0(k)4:	**Internally illuminated address signs.** Internally illuminated address signs must comply with § 140.8; or must consume no more than 5 watts of power as determined according to § 130.0(c).
§ 150.0(k)5:	**Residential Garages for Eight or More Vehicles.** Lighting for residential parking garages for eight or more vehicles must comply with the applicable requirements for nonresidential garages in Sections 110.9, 130.0, 130.1, 130.4, 140.6, and 141.0.
§ 150.0(k)6A:	**Interior Common Areas of Low-rise Multifamily Residential Buildings.** In a low-rise multifamily residential building where the total interior common area in a single building equals 20 percent or less of the floor area, permanently installed lighting for the interior common areas in that building must be comply with Table 150.0-A and be controlled by an occupant sensor.
§ 150.0(k)6B:	**Interior Common Areas of Low-rise Multifamily Residential Buildings.** In a low-rise multifamily residential building where the total interior common area in a single building equals more than 20 percent of the floor area, permanently installed lighting for the interior common areas in that building must: i. Comply with the applicable requirements in Sections 110.9, 130.0, 130.1, 140.6 and 141.0; and ii. Lighting installed in corridors and stairwells must be controlled by occupant sensors that reduce the lighting power in each space by at least 50 percent. The occupant sensors must be capable of turning the light fully on and off from all designed paths of ingress and egress.
Solar Ready Buildings:	
§ 110.10(a)1:	**Single Family Residences.** Single family residences located in subdivisions with ten or more single family residences and where the application for a tentative subdivision map for the residences has been deemed complete and approved by the enforcement agency, which do not have a photovoltaic system installed, must comply with the requirements of § 110.10(b) through § 110.10(e).
§ 110.10(a)2:	**Low-rise Multifamily Buildings.** Low-rise multi-family buildings that do not have a photovoltaic system installed must comply with the requirements of § 110.10(b) through § 110.10(d).
§ 110.10(b)1:	**Minimum Solar Zone Area.** The solar zone must have a minimum total area as described below. The solar zone must comply with access, pathway, smoke ventilation, and spacing requirements as specified in Title 24, Part 9 or other Parts of Title 24 or in any requirements adopted by a local jurisdiction. The solar zone total area must be comprised of areas that have no dimension less than 5 feet and are no less than 80 square feet each for buildings with roof areas less than or equal to 10,000 square feet or no less than 160 square feet each for buildings with roof areas greater than 10,000 square feet. For single family residences, the solar zone must be located on the roof or overhang of the building and have a total area no less than 250 square feet. For low-rise multi-family buildings the solar zone must be located on the roof or overhang of the building, or on the roof or overhang of another structure located within 250 feet of the building, or on covered parking installed with the building project, and have a total area no less than 15 percent of the total roof area of the building excluding any skylight area. The solar zone requirement is applicable to the entire building, including mixed occupancy.*
§ 110.10(b)2:	**Azimuth.** All sections of the solar zone located on steep-sloped roofs must be oriented between 90 degrees and 300 degrees of true north.
§ 110.10(b)3A:	**Shading.** The solar zone must not contain any obstructions, including but not limited to: vents, chimneys, architectural features, and roof mounted equipment.*
§ 110.10(b)3B:	**Shading.** Any obstruction located on the roof or any other part of the building that projects above a solar zone must be located at least twice the distance, measured in the horizontal plane, of the height difference between the highest point of the obstruction and the horizontal projection of the nearest point of the solar zone, measured in the vertical plane.*
§ 110.10(b)4:	**Structural Design Loads on Construction Documents.** For areas of the roof designated as a solar zone, the structural design loads for roof dead load and roof live load must be clearly indicated on the construction documents.
§ 110.10(c):	**Interconnection Pathways.** The construction documents must indicate: a location reserved for inverters and metering equipment and a pathway reserved for routing of conduit from the solar zone to the point of interconnection with the electrical service; and for single family residences and central water-heating systems, a pathway reserved for routing plumbing from the solar zone to the water-heating system.
§ 110.10(d):	**Documentation.** A copy of the construction documents or a comparable document indicating the information from § 110.10(b) through § 110.10(c) must be provided to the occupant.
§ 110.10(e)1:	**Main Electrical Service Panel.** The main electrical service panel must have a minimum busbar rating of 200 amps.
§ 110.10(e)2:	**Main Electrical Service Panel.** The main electrical service panel must have a reserved space to allow for the installation of a double pole circuit breaker for a future solar electric installation. The reserved space must be permanently marked as "For Future Solar Electric".

2019 Low-Rise Residential Mandatory Measures Summary

Requirements for Ventilation and Indoor Air Quality:	
§ 150.0(o)1:	**Requirements for Ventilation and Indoor Air Quality**. All dwelling units must meet the requirements of ASHRAE Standard 62.2, Ventilation and Acceptable Indoor Air Quality in Residential Buildings subject to the amendments specified in § 150.0(o)1.
§ 150.0(o)1C:	**Single Family Detached Dwelling Units.** Single family detached dwelling units, and attached dwelling units not sharing ceilings or floors with other dwelling units, occupiable spaces, public garages, or commercial spaces must have mechanical ventilation airflow provided at rates determined by ASHRAE 62.2 Sections 4.1.1 and 4.1.2 and as specified in § 150.0(o)1C.
§ 150.0(o)1E:	**Multifamily Attached Dwelling Units.** Multifamily attached dwelling units must have mechanical ventilation airflow provided at rates in accordance with Equation 150.0-B and must be either a balanced system or continuous supply or continuous exhaust system. If a balanced system is not used, all units in the building must use the same system type and the dwelling-unit envelope leakage must be ≤ 0.3 CFM at 50 Pa (0.2 inch water) per square foot of dwelling unit envelope surface area and verified in accordance with Reference Residential Appendix RA3.8.
§ 150.0(o)1F:	**Multifamily Building Central Ventilation Systems.** Central ventilation systems that serve multiple dwelling units must be balanced to provide ventilation airflow for each dwelling unit served at a rate equal to or greater than the rate specified by Equation 150.0-B. All unit airflows must be within 20% of the unit with the lowest airflow rate as it relates to the individual unit's minimum required airflow rate needed for compliance.
§ 150.0(o)1G:	**Kitchen Range Hoods.** Kitchen range hoods must be rated for sound in accordance with Section 7.2 of ASHRAE 62.2.
§ 150.0(o)2:	**Field Verification and Diagnostic Testing.** Dwelling unit ventilation airflow must be verified in accordance with Reference Residential Appendix RA3.7. Kitchen range hoods must be verified in accordance with Reference Residential Appendix RA3.7.4.3 to confirm it is rated by HVI to comply with the airflow rates and sound requirements as specified in Section 5 and 7.2 of ASHRAE 62.2.
Pool and Spa Systems and Equipment Measures:	
§ 110.4(a):	**Certification by Manufacturers.** Any pool or spa heating system or equipment must be certified to have all of the following: a thermal efficiency that complies with the Appliance Efficiency Regulations; an on-off switch mounted outside of the heater that allows shutting off the heater without adjusting the thermostat setting; a permanent weatherproof plate or card with operating instructions; and must not use electric resistance heating.*
§ 110.4(b)1:	**Piping.** Any pool or spa heating system or equipment must be installed with at least 36 inches of pipe between the filter and the heater, or dedicated suction and return lines, or built-in or built-up connections to allow for future solar heating.
§ 110.4(b)2:	**Covers.** Outdoor pools or spas that have a heat pump or gas heater must have a cover.
§ 110.4(b)3:	**Directional Inlets and Time Switches for Pools.** Pools must have directional inlets that adequately mix the pool water, and a time switch that will allow all pumps to be set or programmed to run only during off-peak electric demand periods.
§ 110.5:	**Pilot Light.** Natural gas pool and spa heaters must not have a continuously burning pilot light.
§ 150.0(p):	**Pool Systems and Equipment Installation.** Residential pool systems or equipment must meet the specified requirements for pump sizing, flow rate, piping, filters, and valves.*
Lighting Measures:	
§ 110.9:	**Lighting Controls and Components.** All lighting control devices and systems, ballasts, and luminaires must meet the applicable requirements of § 110.9.*
§ 150.0(k)1A:	**Luminaire Efficacy.** All installed luminaires must meet the requirements in Table 150.0-A.
§ 150.0(k)1B:	**Blank Electrical Boxes.** The number of electrical boxes that are more than 5 feet above the finished floor and do not contain a luminaire or other device must be no greater than the number of bedrooms. These electrical boxes must be served by a dimmer, vacancy sensor control, or fan speed control.
§ 150.0(k)1C:	**Recessed Downlight Luminaires in Ceilings.** Luminaires recessed into ceilings must meet all of the requirements for: insulation contact (IC) labeling; air leakage; sealing; maintenance; and socket and light source as described in § 150.0(k)1C.
§ 150.0(k)1D:	**Electronic Ballasts for Fluorescent Lamps.** Ballasts for fluorescent lamps rated 13 watts or greater must be electronic and must have an output frequency no less than 20 kHz.
§ 150.0(k)1E:	**Night Lights, Step Lights, and Path Lights.** Night lights, step lights and path lights are not required to comply with Table 150.0-A or be controlled by vacancy sensors provided they are rated to consume no more than 5 watts of power and emit no more than 150 lumens.
§ 150.0(k)1F:	**Lighting Integral to Exhaust Fans.** Lighting integral to exhaust fans (except when installed by the manufacturer in kitchen exhaust hoods) must meet the applicable requirements of § 150.0(k).*
§ 150.0(k)1G:	**Screw based luminaires.** Screw based luminaires must contain lamps that comply with Reference Joint Appendix JA8.*
§ 150.0(k)1H:	**Light Sources in Enclosed or Recessed Luminaires.** Lamps and other separable light sources that are not compliant with the JA8 elevated temperature requirements, including marking requirements, must not be installed in enclosed or recessed luminaires.
§ 150.0(k)1I:	**Light Sources in Drawers, Cabinets, and Linen Closets.** Light sources internal to drawers, cabinetry or linen closets are not required to comply with Table 150.0-A or be controlled by vacancy sensors provided that they are rated to consume no more than 5 watts of power, emit no more than 150 lumens, and are equipped with controls that automatically turn the lighting off when the drawer, cabinet or linen closet is closed.
§ 150.0(k)2A:	**Interior Switches and Controls.** All forward phase cut dimmers used with LED light sources must comply with NEMA SSL 7A.
§ 150.0(k)2B:	**Interior Switches and Controls.** Exhaust fans must be controlled separately from lighting systems.*
§ 150.0(k)2C:	**Interior Switches and Controls.** Lighting must have readily accessible wall-mounted controls that allow the lighting to be manually turned ON and OFF.*
§ 150.0(k)2D:	**Interior Switches and Controls.** Controls and equipment must be installed in accordance with manufacturer's instructions.
§ 150.0(k)2E:	**Interior Switches and Controls.** Controls must not bypass a dimmer, occupant sensor, or vacancy sensor function if the control is installed to comply with § 150.0(k).
§ 150.0(k)2F:	**Interior Switches and Controls.** Lighting controls must comply with the applicable requirements of § 110.9.

2019 Low-Rise Residential Mandatory Measures Summary

§ 150.0(h)3A:	**Clearances.** Air conditioner and heat pump outdoor condensing units must have a clearance of at least 5 feet from the outlet of any dryer vent.
§ 150.0(h)3B:	**Liquid Line Drier.** Air conditioners and heat pump systems must be equipped with liquid line filter driers if required, as specified by the manufacturer's instructions.
§ 150.0(j)1:	**Storage Tank Insulation.** Unfired hot water tanks, such as storage tanks and backup storage tanks for solar water-heating systems, must have a minimum of R-12 external insulation or R-16 internal insulation where the internal insulation R-value is indicated on the exterior of the tank.
§ 150.0(j)2A:	**Water Piping, Solar Water-heating System Piping, and Space Conditioning System Line Insulation.** All domestic hot water piping must be insulated as specified in Section 609.11 of the California Plumbing Code. In addition, the following piping conditions must have a minimum insulation wall thickness of 1 inch or a minimum insulation R-value of 7.7: the first 5 feet of cold water pipes from the storage tank; all hot water piping with a nominal diameter equal to or greater than 3/4 inch and less than 1 inch; all hot water piping with a nominal diameter less than 3/4 inch that is: associated with a domestic hot water recirculation system, from the heating source to storage tank or between tanks, buried below grade, and from the heating source to kitchen fixtures.*
§ 150.0(j)3:	**Insulation Protection.** Piping insulation must be protected from damage, including that due to sunlight, moisture, equipment maintenance, and wind as required by Section 120.3(b). Insulation exposed to weather must be water retardant and protected from UV light (no adhesive tapes). Insulation covering chilled water piping and refrigerant suction piping located outside the conditioned space must include, or be protected by, a Class I or Class II vapor retarder. Pipe insulation buried below grade must be installed in a waterproof and non-crushable casing or sleeve.
§ 150.0(n)1:	**Gas or Propane Water Heating Systems.** Systems using gas or propane water heaters to serve individual dwelling units must include all of the following: A dedicated 125 volt, 20 amp electrical receptacle that is connected to the electric panel with a 120/240 volt 3 conductor, 10 AWG copper branch circuit, within 3 feet from the water heater without obstruction. Both ends of the unused conductor must be labeled with the word "spare" and be electrically isolated. Have a reserved single pole circuit breaker space in the electrical panel adjacent to the circuit breaker for the branch circuit and labeled with the words "Future 240V Use"; a Category III or IV vent, or a Type B vent with straight pipe between the outside termination and the space where the water heater is installed; a condensate drain that is no more than 2 inches higher than the base of the water heater, and allows natural draining without pump assistance; and a gas supply line with a capacity of at least 200,000 Btu per hour.
§ 150.0(n)2:	**Recirculating Loops.** Recirculating loops serving multiple dwelling units must meet the requirements of § 110.3(c)5.
§ 150.0(n)3:	**Solar Water-heating Systems.** Solar water-heating systems and collectors must be certified and rated by the Solar Rating and Certification Corporation (SRCC), the International Association of Plumbing and Mechanical Officials, Research and Testing (IAPMO R&T), or by a listing agency that is approved by the Executive Director.
Ducts and Fans Measures:	
§ 110.8(d)3:	**Ducts.** Insulation installed on an existing space-conditioning duct must comply with California Mechanical Code (CMC) Section 604.0. If a contractor installs the insulation, the contractor must certify to the customer in writing, that the insulation meets this requirement.
§ 150.0(m)1:	**CMC Compliance.** All air-distribution system ducts and plenums must meet the requirements of the CMC Section 601.0, 602.0, 603.0, 604.0, 605.0 and ANSI/SMACNA-006-2006 HVAC Duct Construction Standards Metal and Flexible 3rd Edition. Portions of supply-air and return-air ducts and plenums must be insulated to a minimum installed level of R-6.0 or a minimum installed level of R-4.2 when ducts are entirely in conditioned space as confirmed through field verification and diagnostic testing (RA3.1.4.3.8). Portions of the duct system completely exposed and surrounded by directly conditioned space are not required to be insulated. Connections of metal ducts and inner core of flexible ducts must be mechanically fastened. Openings must be sealed with mastic, tape, or other duct-closure system that meets the applicable requirements of UL 181, UL 181A, or UL 181B or aerosol sealant that meets the requirements of UL 723. If mastic or tape is used to seal openings greater than ¼ inch, the combination of mastic and either mesh or tape must be used. Building cavities, support platforms for air handlers, and plenums designed or constructed with materials other than sealed sheet metal, duct board or flexible duct must not be used to convey conditioned air. Building cavities and support platforms may contain ducts. Ducts installed in cavities and support platforms must not be compressed to cause reductions in the cross-sectional area.*
§ 150.0(m)2:	**Factory-Fabricated Duct Systems.** Factory-fabricated duct systems must comply with applicable requirements for duct construction, connections, and closures; joints and seams of duct systems and their components must not be sealed with cloth back rubber adhesive duct tapes unless such tape is used in combination with mastic and draw bands.
§ 150.0(m)3:	**Field-Fabricated Duct Systems.** Field-fabricated duct systems must comply with applicable requirements for: pressure-sensitive tapes, mastics, sealants, and other requirements specified for duct construction.
§ 150.0(m)7:	**Backdraft Damper.** Fan systems that exchange air between the conditioned space and outdoors must have backdraft or automatic dampers.
§ 150.0(m)8:	**Gravity Ventilation Dampers.** Gravity ventilating systems serving conditioned space must have either automatic or readily accessible, manually operated dampers in all openings to the outside, except combustion inlet and outlet air openings and elevator shaft vents.
§ 150.0(m)9:	**Protection of Insulation.** Insulation must be protected from damage, sunlight, moisture, equipment maintenance, and wind. Insulation exposed to weather must be suitable for outdoor service. For example, protected by aluminum, sheet metal, painted canvas, or plastic cover. Cellular foam insulation must be protected as above or painted with a coating that is water retardant and provides shielding from solar radiation.
§ 150.0(m)10:	**Porous Inner Core Flex Duct.** Porous inner core flex ducts must have a non-porous layer between the inner core and outer vapor barrier.
§ 150.0(m)11:	**Duct System Sealing and Leakage Test.** When space conditioning systems use forced air duct systems to supply conditioned air to an occupiable space, the ducts must be sealed and duct leakage tested, as confirmed through field verification and diagnostic testing, in accordance with § 150.0(m)11 and Reference Residential Appendix RA3.
§ 150.0(m)12:	**Air Filtration.** Space conditioning systems with ducts exceeding 10 feet and the supply side of ventilation systems must have MERV 13 or equivalent filters. Filters for space conditioning systems must have a 2 inch depth or can be 1 inch if sized per Equation 150.0-A. Pressure drops and labeling must meet the requirements in §150.0(m)12. Filters must be accessible for regular service.*
§ 150.0(m)13:	**Space Conditioning System Airflow Rate and Fan Efficacy.** Space conditioning systems that use ducts to supply cooling must have a hole for the placement of a static pressure probe, or a permanently installed static pressure probe in the supply plenum. Airflow must be ≥ 350 CFM per ton of nominal cooling capacity, and an air-handling unit fan efficacy ≤ 0.45 watts per CFM for gas furnace air handlers and ≤ 0.58 watts per CFM for all others. Small duct high velocity systems must provide an airflow ≥ 250 CFM per ton of nominal cooling capacity, and an air-handling unit fan efficacy ≤ 0.62 watts per CFM. Field verification testing is required in accordance with Reference Residential Appendix RA3.3.*

2019 Low-Rise Residential Mandatory Measures Summary

*NOTE: Low-rise residential buildings subject to the Energy Standards must comply with all applicable mandatory measures, regardless of the compliance approach used. Review the respective section for more information. *Exceptions may apply.*
(Original 08/2019)

Building Envelope Measures:	
§ 110.6(a)1:	**Air Leakage.** Manufactured fenestration, exterior doors, and exterior pet doors must limit air leakage to 0.3 cfm per square foot or less when tested per NFRC-400, ASTM E283 or AAMA/WDMA/CSA 101/I.S.2/A440-2011.*
§ 110.6(a)5:	**Labeling.** Fenestration products and exterior doors must have a label meeting the requirements of Section 10-111(a).
§ 110.6(b):	**Field fabricated exterior doors and fenestration** products must use U-factors and solar heat gain coefficient (SHGC) values from Tables 110.6-A, 110.6-B, or JA4.5 for exterior doors. They must be caulked and/or weather stripped.*
§ 110.7:	**Air Leakage.** All joints, penetrations, and other openings in the building envelope that are potential sources of air leakage must be caulked, gasketed, or weather stripped.
§ 110.8(a):	**Insulation Certification by Manufacturers.** Insulation must be certified by the Department of Consumer Affairs, Bureau of Household Goods and Services (BHGS).
§ 110.8(g):	**Insulation Requirements for Heated Slab Floors.** Heated slab floors must be insulated per the requirements of Section 110.8(g).
§ 110.8(i):	**Roofing Products Solar Reflectance and Thermal Emittance.** The thermal emittance and aged solar reflectance values of the roofing material must meet the requirements of § 110.8(i) and be labeled per §10-113 when the installation of a cool roof is specified on the CF1R.
§ 110.8(j):	**Radiant Barrier.** When required, radiant barriers must have an emittance of 0.05 or less and be certified to the Department of Consumer Affairs.
§ 150.0(a):	**Ceiling and Rafter Roof Insulation.** Minimum R-22 insulation in wood-frame ceiling; or the weighted average U-factor must not exceed 0.043. Minimum R-19 or weighted average U-factor of 0.054 or less in a rafter roof alteration. Attic access doors must have permanently attached insulation using adhesive or mechanical fasteners. The attic access must be gasketed to prevent air leakage. Insulation must be installed in direct contact with a continuous roof or ceiling which is sealed to limit infiltration and exfiltration as specified in § 110.7, including but not limited to placing insulation either above or below the roof deck or on top of a drywall ceiling.*
§ 150.0(b):	**Loose-fill Insulation.** Loose fill insulation must meet the manufacturer's required density for the labeled R-value.
§ 150.0(c):	**Wall Insulation.** Minimum R-13 insulation in 2x4 inch wood framing wall or have a U-factor of 0.102 or less, or R-20 in 2x6 inch wood framing or have a U-factor of 0.071 or less, (R-19 in 2x6 or U-factor of 0.074 or less). Opaque non-framed assemblies must have an overall assembly U-factor not exceeding 0.102, equivalent to an installed value of R-13 in a wood framed assembly. Masonry walls must meet Table 150.1-A or B.*
§ 150.0(d):	**Raised-floor Insulation.** Minimum R-19 insulation in raised wood framed floor or 0.037 maximum U-factor.*
§ 150.0(f):	**Slab Edge Insulation.** Slab edge insulation must meet all of the following: have a water absorption rate, for the insulation material alone without facings no greater than 0.3%; have a water vapor permeance no greater than 2.0 perm per inch; be protected from physical damage and UV light deterioration; and, when installed as part of a heated slab floor, meet the requirements of § 110.8(g).
§ 150.0(g)1:	**Vapor Retarder.** In climate zones 1 through 16, the earth floor of unvented crawl space must be covered with a Class I or Class II vapor retarder. This requirement also applies to controlled ventilation crawl space for buildings complying with the exception to § 150.0(d).
§ 150.0(g)2:	**Vapor Retarder.** In climate zones 14 and 16, a Class I or Class II vapor retarder must be installed on the conditioned space side of all insulation in all exterior walls, vented attics, and unvented attics with air-permeable insulation.
§ 150.0(q):	**Fenestration Products.** Fenestration, including skylights, separating conditioned space from unconditioned space or outdoors must have a maximum U-factor of 0.58; or the weighted average U-factor of all fenestration must not exceed 0.58.*
Fireplaces, Decorative Gas Appliances, and Gas Log Measures:	
§ 110.5(e)	**Pilot Light.** Continuously burning pilot lights are not allowed for indoor and outdoor fireplaces.
§ 150.0(e)1:	**Closable Doors.** Masonry or factory-built fireplaces must have a closable metal or glass door covering the entire opening of the firebox.
§ 150.0(e)2:	**Combustion Intake.** Masonry or factory-built fireplaces must have a combustion outside air intake, which is at least six square inches in area and is equipped with a readily accessible, operable, and tight-fitting damper or combustion-air control device.*
§ 150.0(e)3:	**Flue Damper.** Masonry or factory-built fireplaces must have a flue damper with a readily accessible control.*
Space Conditioning, Water Heating, and Plumbing System Measures:	
§ 110.0-§ 110.3:	**Certification.** Heating, ventilation and air conditioning (HVAC) equipment, water heaters, showerheads, faucets, and all other regulated appliances must be certified by the manufacturer to the Energy Commission.*
§ 110.2(a):	**HVAC Efficiency.** Equipment must meet the applicable efficiency requirements in Table 110.2-A through Table 110.2-K.*
§ 110.2(b):	**Controls for Heat Pumps with Supplementary Electric Resistance Heaters.** Heat pumps with supplementary electric resistance heaters must have controls that prevent supplementary heater operation when the heating load can be met by the heat pump alone; and in which the cut-on temperature for compression heating is higher than the cut-on temperature for supplementary heating, and the cut-off temperature for compression heating is higher than the cut-off temperature for supplementary heating.*
§ 110.2(c):	**Thermostats.** All heating or cooling systems not controlled by a central energy management control system (EMCS) must have a setback thermostat.*
§ 110.3(c)4:	**Water Heating Recirculation Loops Serving Multiple Dwelling Units.** Water heating recirculation loops serving multiple dwelling units must meet the air release valve, backflow prevention, pump priming, pump isolation valve, and recirculation loop connection requirements of § 110.3(c)4.
§ 110.3(c)6:	**Isolation Valves.** Instantaneous water heaters with an input rating greater than 6.8 kBTU per hour (2 kW) must have isolation valves with hose bibbs or other fittings on both cold and hot water lines to allow for flushing the water heater when the valves are closed.
§ 110.5:	**Pilot Lights.** Continuously burning pilot lights are prohibited for natural gas: fan-type central furnaces; household cooking appliances (appliances without an electrical supply voltage connection with pilot lights that consume less than 150 Btu/hr are exempt); and pool and spa heaters.*
§ 150.0(h)1:	**Building Cooling and Heating Loads.** Heating and/or cooling loads are calculated in accordance with the ASHRAE Handbook, Equipment Volume, Applications Volume, and Fundamentals Volume; the SMACNA Residential Comfort System Installation Standards Manual; or the ACCA Manual J using design conditions specified in § 150.0(h)2.

TITLE 24 SHEET INDEX		
NO.	SHEET	DESCRIPTION
1	T24-MM	MANDATORY MEASURES FORMS
2	T24-1	ENERGY COMPLIANCE FORMS - BUILDING A
3	T24-2	ENERGY COMPLIANCE FORMS - BUILDING A CONT
4	T24-3	ENERGY COMPLIANCE FORMS - BUILDING B
5	T24-4	ENERGY COMPLIANCE FORMS - BUILDING B CONT

GOUVIS
engineering
consulting group, inc. ®

15 Studebaker
Irvine
CA 92618

Irvine
tel 949.752.1612
fax 949.752.5321

Palm Springs
tel 760.323.5090

REGISTERED PROFESSIONAL ENGINEER
RADE BABIC
No. M 38573
Exp. 09-30-2023
MECHANICAL
STATE OF CALIFORNIA

DATE SIGNED: 1/29/24

RESTRICTIVE NOTICE

THESE DESIGNS, DRAWINGS, AND SPECIFICATIONS ARE THE EXCLUSIVE PROPERTY OF GOUVIS ENGINEERING CONSULTING GROUP. THEY ARE THE SUBJECTOF COPYRIGHT AND OTHER LEGAL PROTECTION. THEY MAY BE USED ONLY BY THEIR INTENDED RECIPIENT AND ONLY FOR THE PROJECT DEPICTED HEREIN. NO PART OF THESE DRAWINGS ARE TO BE COPIED, TRANSFERRED, REPRODUCED, NOR CAN THEY BE USED, IN WHOLE OR IN PART, BY ANY OTHER PERSON OR FOR ANY OTHER PROJECT OR STRUCTURE, WITHOUT THE PRIOR EXPRESS WRITTEN CONSENT OF GOUVIS ENGINEERING CONSULTING GROUP

© 2017 GOUVIS ENGINEERING CONSULTING GROUP INC. - ALL RIGHTS RESERVED

PROJECT:
Tenant Square

DEVELOPER:
Osito Holdings LLC

ARCHITECT:
Gary Moore & Associates

LOCATION:
Morgan Hill
Santa Clara
CA

REVISIONS		
NO.	DATE	DESCRIPTION
1	02/02/23	PLAN CHECK
2	11/01/23	PLAN CHECK
3	01/30/24	FIRE COMMENT

SHEET NAME:
TITLE 24 FORMS
MANDATORY
MEASURES

PROJECT NUMBER:
66074

ENGINEER:

DRAFTER:

SHEET NUMBER:
T24-MM

ISSUED DATE:XX/XX/XX

2019 CALIFORNIA GREEN BUILDING STANDARDS CODE
RESIDENTIAL MANDATORY MEASURES, SHEET 1 (July 2021, Includes July 2021 Supplement)

Y = YES
N/A = NOT APPLICABLE
RESPON. PARTY = RESPONSIBLE PARTY (ie: ARCHITECT, ENGINEER, OWNER, CONTRACTOR, INSPECTOR ETC.)

CHAPTER 3
GREEN BUILDING
SECTION 301 GENERAL

301.1 SCOPE. Buildings shall be designed to include the green building measures specified as mandatory in the application checklists contained in this code. Voluntary green building measures are also included in the application checklists and may be included in the design and construction of structures covered by this code, but are not required unless adopted by a city, county, or city and county as specified in Section 101.7.

301.1.1 Additions and alterations. [HCD] The mandatory provisions of Chapter 4 shall be applied to additions or alterations of existing residential buildings where the addition or alteration increases the building's conditioned area, volume, or size. The requirements shall apply only to and/or within the specific area of the addition or alteration.

Note: On and after January 1, 2014, residential buildings undergoing permitted alterations, additions, or improvements shall replace noncompliant plumbing fixtures with water-conserving plumbing fixtures. Plumbing fixture replacement is required prior to issuance of a certificate of final completion, certificate of occupancy or final permit approval by the local building department. See Civil Code Section 1101.1, et seq., for the definition of a noncompliant plumbing fixture, types of residential buildings affected and other important enactment dates.

301.2 LOW-RISE AND HIGH-RISE RESIDENTIAL BUILDINGS. [HCD] The provisions of individual sections of CALGreen may apply to either low-rise residential buildings high-rise residential buildings, or both. Individual sections will be designated by banners to indicate where the section applies specifically to low-rise only (LR) or high-rise only (HR). When the section applies to both low-rise and high-rise buildings, no banner will be used.

SECTION 302 MIXED OCCUPANCY BUILDINGS

302.1 MIXED OCCUPANCY BUILDINGS. In mixed occupancy buildings, each portion of a building shall comply with the specific green building measures applicable to each specific occupancy.

Exceptions:
1. [HCD] Accessory structures and accessory occupancies serving residential buildings shall comply with Chapter 4 and Appendix A4, as applicable.
2. [HCD] For purposes of CALGreen, live/work units, complying with Section 419 of the *California Building Code*, shall not be considered mixed occupancies. Live/Work units shall comply with Chapter 4 and Appendix A4, as applicable.

DIVISION 4.1 PLANNING AND DESIGN

ABBREVIATION DEFINITIONS:

HCD	Department of Housing and Community Development
BSC	California Building Standards Commission
DSA-SS	Division of the State Architect, Structural Safety
OSHPD	Office of Statewide Health Planning and Development
LR	Low Rise
HR	High Rise
AA	Additions and Alterations
N	New

CHAPTER 4
RESIDENTIAL MANDATORY MEASURES

SECTION 4.102 DEFINITIONS

4.102.1 DEFINITIONS
The following terms are defined in Chapter 2 *(and are included here for reference)*

FRENCH DRAIN. A trench, hole or other depressed area loosely filled with rock, gravel, fragments of brick or similar pervious material used to collect or channel drainage or runoff water.

WATTLES. Wattles are used to reduce sediment in runoff. Wattles are often constructed of natural plant materials such as hay, straw or similar material shaped in the form of tubes and placed on a downflow slope. Wattles are also used for perimeter and inlet controls.

4.106 SITE DEVELOPMENT

4.106.1 GENERAL. Preservation and use of available natural resources shall be accomplished through evaluation and careful planning to minimize negative effects on the site and adjacent areas. Preservation of slopes, management of storm water drainage and erosion controls shall comply with this section.

4.106.2 STORM WATER DRAINAGE AND RETENTION DURING CONSTRUCTION. Projects which disturb less than one acre of soil and are not part of a larger common plan of development which in total disturbs one acre or more, shall manage storm water drainage during construction. In order to manage storm water drainage during construction, one or more of the following measures shall be implemented to prevent flooding of adjacent property, prevent erosion and retain soil runoff on the site.

1. Retention basins of sufficient size shall be utilized to retain storm water on the site.
2. Where storm water is conveyed to a public drainage system, collection point, gutter or similar disposal method, water shall be filtered by use of a barrier system, wattle or other method approved by the enforcing agency.
3. Compliance with a lawfully enacted storm water management ordinance.

Note: Refer to the State Water Resources Control Board for projects which disturb one acre or more of soil, or are part of a larger common plan of development which in total disturbs one acre or more of soil.

(Website: https://www.waterboards.ca.gov/water_issues/programs/stormwater/construction.html)

4.106.3 GRADING AND PAVING. Construction plans shall indicate how the site grading or drainage system will manage all surface water flows to keep water from entering buildings. Examples of methods to manage surface water include, but are not limited to, the following:

1. Swales
2. Water collection and disposal systems
3. French drains
4. Water retention gardens
5. Other water measures which keep surface water away from buildings and aid in groundwater recharge.

Exception: Additions and alterations not altering the drainage path.

4.106.4 Electric vehicle (EV) charging for new construction. New construction shall comply with Sections 4.106.4.1, 4.106.4.2, or 4.106.4.3 to facilitate future installation and use of EV chargers. Electric vehicle supply equipment (EVSE) shall be installed in accordance with the *California Electrical Code,* Article 625.

Exceptions:
1. On a case-by-case basis, where the local enforcing agency has determined EV charging and infrastructure are not feasible based upon one or more of the following conditions:
   1.1 Where there is no commercial power supply.
   1.2 Where there is evidence substantiating that meeting the requirements will alter the local utility infrastructure design requirements on the utility side of the meter so as to increase the utility side cost to the homeowner or the developer by more than $400.00 per dwelling unit.
2. Accessory Dwelling Units (ADU) and Junior Accessory Dwelling Units (JADU) without additional parking facilities.

4.106.4.1 New one- and two-family dwellings and townhouses with attached private garages. For each dwelling unit, install a listed raceway to accommodate a dedicated 208/240-volt branch circuit. The raceway shall not be less than trade size 1 (nominal 1-inch inside diameter). The raceway shall originate at the main service or subpanel and shall terminate into a listed cabinet, box or other enclosure in close proximity to the proposed location of an EV charger. Raceways are required to be continuous at enclosed, inaccessible or concealed areas and spaces. The service panel and/or subpanel shall provide capacity to install a 40-ampere 208/240-volt minimum dedicated branch circuit and space(s) reserved to permit installation of a branch circuit overcurrent protective device.

Exemption: A raceway is not required if a minimum 40-ampere 208/240-volt dedicated EV branch circuit is installed in close proximity to the proposed location of an EV charger at the time of original construction in accordance with the *California Electrical Code.*

4.106.4.1.1 Identification. The service panel or subpanel circuit directory shall identify the overcurrent protective device space(s) reserved for future EV charging as "EV CAPABLE". The raceway termination location shall be permanently and visibly marked as "EV CAPABLE".

4.106.4.2 New multifamily dwellings. If residential parking is available, ten (10) percent of the total number of parking spaces on a building site, provided for all types of parking facilities, shall be electric vehicle charging spaces (EV spaces) capable of supporting future EVSE. Calculations for the required number of EV spaces shall be rounded up to the nearest whole number.

Notes:
1. Construction documents are intended to demonstrate the project's capability and capacity for facilitating future EV charging.
2. There is no requirement for EV spaces to be constructed or available until EV chargers are installed for use.
3. A parking space served by electric vehicle supply equipment or designated as a future EV charging space shall count as at least one standard automobile parking space for the purpose of complying with any applicable minimum parking space requirements established by a local jurisdiction. See *Vehicle Code* Section 22511.2 for further details.

4.106.4.2.1 Electric vehicle charging space (EV space) locations. Construction documents shall indicate the location of proposed EV spaces. Where common use parking is provided at least one EV space shall be located in the common use parking area and shall be available for use by all residents.

4.106.4.2.1.1 Electric Vehicle Charging Stations (EVCS) When EV chargers are installed, EV spaces required by Section 4.106.2.2, Item 3, shall comply with at least one of the following options:

1. The EV space shall be located adjacent to an accessible parking space meeting the requirements of the *California Building Code,* Chapter 11A, to allow use of the EV charger from the accessible parking space.
2. The EV space shall be located on an accessible route, as defined in the *California Building Code,* Chapter 2, to the building.

Exception: Electric vehicle charging stations designed and constructed in compliance with the *California Building Code,* Chapter 11B, are not required to comply with Section 4.106.4.2.1.1 and Section 4.106.4.2.2, Item 3.

Note: Electric Vehicle charging stations serving public housing are required to comply with the *California Building Code*, Chapter 11B.

4.106.4.2.2 Electric vehicle charging space (EV space) dimensions. The EV space shall be designed to comply with the following:

1. The minimum length of each EV space shall be 18 feet (5486 mm).
2. The minimum width of each EV space shall be 9 feet (2743 mm).
3. One in every 25 EV spaces, but not less than one EV space, shall have an 8-foot (2438 mm) wide minimum aisle. A 5-foot (1524 mm) wide minimum aisle shall be permitted provided the minimum width of the EV space is 12 feet (3658 mm).
   a. Surface slope for this EV space and the aisle shall not exceed 1 unit vertical in 48 units horizontal (2.083 percent slope) in any direction.

4.106.4.2.3 Single EV space required. Install a listed raceway capable of accommodating a 208/240-volt dedicated branch circuit. The raceway shall not be less than trade size 1 (nominal 1-inch inside diameter). The raceway shall originate at the main service or subpanel and shall terminate into a listed cabinet, box or enclosure in close proximity to the proposed location of the EV space. Construction documents shall identify the raceway termination point. The service panel and/or subpanel shall provide capacity to install a 40-ampere minimum dedicated branch circuit and space(s) reserved to permit installation of a branch circuit overcurrent protective device.

Exemption: A raceway is not required if a minimum 40-ampere 208/240-volt dedicated EV branch circuit is installed in close proximity to the proposed location of an EV charger, at the time of original construction in accordance with the *California Electrical Code.*

4.106.4.2.4 Multiple EV spaces required. Construction documents shall indicate the raceway termination point and proposed location of future EV spaces and EV chargers. Construction documents shall also provide information on amperage of future EVSE, raceway method(s), wiring schematics and electrical load calculations to verify that the electrical panel service capacity and electrical system, including any on-site distribution transformer(s), have sufficient capacity to simultaneously charge all EVs at all required EV spaces at the full rated amperage of the EVSE. Plan design shall be based upon a 40-ampere minimum branch circuit. Required raceways and related components that are planned to be installed underground, enclosed, inaccessible or in concealed areas and spaces shall be installed at the time of original construction.

Exemption: A raceway is not required if a minimum 40-ampere 208/240-volt dedicated EV branch circuit is installed in close proximity to the proposed location of an EV charger, at the time of original construction in accordance with the *California Electrical Code.*

4.106.4.2.5 Identification. The service panel or subpanel circuit directory shall identify the overcurrent protective device space(s) reserved for future EV charging purposes as "EV CAPABLE" in accordance with the *California Electrical Code.*

4.106.4.3 New hotels and motels. All newly constructed hotels and motels shall provide EV spaces capable of supporting future installation of EVSE. The construction documents shall identify the location of the EV spaces.

Notes:

1. Construction documents are intended to demonstrate the project's capability and capacity or facilitating future EV charging.
2. There is no requirement for EV spaces to be constructed or available until EV chargers are installed for use.
3. A parking space served by electrical vehicle supple equipment or designed as a future EV charging space shall count as at least one standard automobile parking space for the purpose of complying with any applicable minimum parking space requirements established by a local jurisdiction. See *Vehicle Code* Section 22511.2 for further details.

4.106.4.3.1 Number of required EV spaces. The number of required EV spaces shall be based on the total number of parking spaces provided for all types of parking facilities in accordance with Table 4.106.4.3.1. Calculations for the required number of EV spaces shall be rounded up to the nearest whole number.

TABLE 4.106.4.3.1

TOTAL NUMBER OF PARKING SPACES	NUMBER OF REQUIRED EV SPACES
0-9	0
10-25	1
26-50	2
51-75	4
76-100	5
101-150	7
151-200	10
201 and over	6 percent of total

4.106.4.3.2 Electric vehicle charging space (EV space) dimensions. The EV spaces shall be designed to comply with the following:

1. The minimum length of each EV space shall be 18 feet (5486mm).
2. The minimum width of each EV space shall be 9 feet (2743mm)

4.106.4.3.3 Single EV space required. When a single EV space is required, the EV space shall be designed in accordance with Section 4.106.4.2.3.

4.106.4.3.4 Multiple EV spaces required. When multiple EV spaces are required, the EV spaces shall be designed in accordance with Section 4.106.4.2.4.

4.106.4.3.5 Identification. The service panels or sub-panels shall be identified in accordance with Section 4.106.4.2.5.

4.106.4.3.6 Accessible EV spaces. In addition to the requirements in Section 4.106.4.3, EV spaces for hotels/motels and all EVSE, when installed, shall comply with the accessibility provisions for the EV charging stations in the *California Building Code,* Chapter 11B.

DIVISION 4.2 ENERGY EFFICIENCY

4.201 GENERAL

4.201.1 SCOPE. For the purposes of mandatory energy efficiency standards in this code, the California Energy Commission will continue to adopt mandatory standards.

DIVISION 4.3 WATER EFFICIENCY AND CONSERVATION

4.303 INDOOR WATER USE

4.303.1 WATER CONSERVING PLUMBING FIXTURES AND FITTINGS. Plumbing fixtures (water closets and urinals) and fittings (faucets and showerheads) shall comply with the sections 4.303.1.1, 4.303.1.2, 4.303.1.3, and 4.303.4.4.

Note: All noncompliant plumbing fixtures in any residential real property shall be replaced with water-conserving plumbing fixtures. Plumbing fixture replacement is required prior to issuance of a certificate of final completion, certificate of occupancy, or final permit approval by the local building department. See Civil Code Section 1101.1, et seq., for the definition of a noncompliant plumbing fixture, types of residential buildings affected and other important enactment dates.

4.303.1.1 Water Closets. The effective flush volume of all water closets shall not exceed 1.28 gallons per flush. Tank-type water closets shall be certified to the performance criteria of the U.S. EPA WaterSense Specification for Tank-type Toilets.

Note: The effective flush volume of dual flush toilets is defined as the composite, average flush volume of two reduced flushes and one full flush.

4.303.1.2 Urinals. The effective flush volume of wall mounted urinals shall not exceed 0.125 gallons per flush. The effective flush volume of all other urinals shall not exceed 0.5 gallons per flush.

4.303.1.3 Showerheads.

4.303.1.3.1 Single Showerhead. Showerheads shall have a maximum flow rate of not more than 1.8 gallons per minute at 80 psi. Showerheads shall be certified to the performance criteria of the U.S. EPA WaterSense Specification for Showerheads.

4.303.1.3.2 Multiple showerheads serving one shower. When a shower is served by more than one showerhead, the combined flow rate of all the showerheads and/or other shower outlets controlled by a single valve shall not exceed 1.8 gallons per minute at 80 psi, or the shower shall be designed to only allow one shower outlet to be in operation at a time.

Note: A hand-held shower shall be considered a showerhead.

4.303.1.4 Faucets.

4.303.1.4.1 Residential Lavatory Faucets. The maximum flow rate of residential lavatory faucets shall not exceed 1.2 gallons per minute at 60 psi. The minimum flow rate of residential lavatory faucets shall not be less than 0.8 gallons per minute at 20 psi.

4.303.1.4.2 Lavatory Faucets in Common and Public Use Areas. The maximum flow rate of lavatory faucets installed in common and public use areas (outside of dwellings or sleeping units) in residential buildings shall not exceed 0.5 gallons per minute at 60 psi.

4.303.1.4.3 Metering Faucets. Metering faucets when installed in residential buildings shall not deliver more than 0.2 gallons per cycle.

4.303.1.4.4 Kitchen Faucets. The maximum flow rate of kitchen faucets shall not exceed 1.8 gallons per minute at 60 psi. Kitchen faucets may temporarily increase the flow above the maximum rate, but not to exceed 2.2 gallons per minute at 60 psi, and must default to a maximum flow rate of 1.8 gallons per minute at 60 psi.

Note: Where complying faucets are unavailable, aerators or other means may be used to achieve reduction.

4.303.1.4.5 Pre-rinse spray valves.
When installed, shall meet the requirements in the *California Code of Regulations*, Title 20 (Appliance Efficiency Regulations), Sections 1605.1 (h)(4) Table H-2, Section 1605.3 (h)(4)(A), and Section 1607 (d)(7) and shall be equipped with an integral automatic shutoff.

FOR REFERENCE ONLY: The following table and code section have been reprinted from the *California Code of Regulations*, Title 20 (Appliance Efficiency Regulations),Section 1605.1 (h)(4) and Section 1605.3 (h)(4)(A).

TABLE H-2

STANDARDS FOR COMMERCIAL PRE-RINSE SPRAY VALVES MANUFACTURED ON OR AFTER JANUARY 28, 2019

PRODUCT CLASS [spray force in ounce force (ozf)]	MAXIMUM FLOW RATE (gpm)
Product Class 1 (≤ 5.0 ozf)	1.00
Product Class 2 (> 5.0 ozf and ≤ 8.0 ozf)	1.20
Product Class 3 (> 8.0 ozf)	1.28

Title 20 Section 1605.3 (h)(4)(A): Commercial prerinse spray values manufactured on or after January 1, 2006, shall have a minimum spray force of not less than 4.0 ounces-force (ozf)[113 grams-force(gf)]

4.303.2 Submeters for multifamily buildings and dwelling units in mixed-used residential/commercial buildings.
Submeters shall be installed to measure water usage of individual rental dwelling units in accordance with the *California Plumbing Code*.

4.303.3 Standards for plumbing fixtures and fittings. Plumbing fixtures and fittings shall be installed in accordance with the *California Plumbing Code*, and shall meet the applicable standards referenced in Table 1701.1 of the *California Plumbing Code*.

NOTE:
THIS TABLE COMPILES THE DATA IN SECTION 4.303.1, AND IS INCLUDED AS A CONVENIENCE FOR THE USER.

TABLE - MAXIMUM FIXTURE WATER USE

FIXTURE TYPE	FLOW RATE
SHOWER HEADS (RESIDENTIAL)	1.8 GMP @ 80 PSI
LAVATORY FAUCETS (RESIDENTIAL)	MAX. 1.2 GPM @ 60 PSI MIN. 0.8 GPM @ 20 PSI
LAVATORY FAUCETS IN COMMON & PUBLIC USE AREAS	0.5 GPM @ 60 PSI
KITCHEN FAUCETS	1.8 GPM @ 60 PSI
METERING FAUCETS	0.2 GAL/CYCLE
WATER CLOSET	1.28 GAL/FLUSH
URINALS	0.125 GAL/FLUSH

4.304 OUTDOOR WATER USE

4.304.1 OUTDOOR POTABLE WATER USE IN LANDSCAPE AREAS. Residential developments shall comply with a local water efficient landscape ordinance or the current California Department of Water Resources' Model Water Efficient Landscape Ordinance (MWELO), whichever is more stringent.

NOTES:

1. The Model Water Efficient Landscape Ordinance (MWELO) is located in the *California Code Regulations,* Title 23, Chapter 2.7, Division 2. MWELO and supporting documents, including water budget calculator, are available at: https://www.water.ca.gov/

DIVISION 4.4 MATERIAL CONSERVATION AND RESOURCE EFFICIENCY

4.406 ENHANCED DURABILITY AND REDUCED MAINTENANCE

4.406.1 RODENT PROOFING. Annular spaces around pipes, electric cables, conduits or other openings in sole/bottom plates at exterior walls shall be protected against the passage of rodents by closing such openings with cement mortar, concrete masonry or a similar method acceptable to the enforcing agency.

4.408 CONSTRUCTION WASTE REDUCTION, DISPOSAL AND RECYCLING

4.408.1 CONSTRUCTION WASTE MANAGEMENT. Recycle and/or salvage for reuse a minimum of 65 percent of the non-hazardous construction and demolition waste in accordance with either Section 4.408.2, 4.408.3 or 4.408.4, or meet a more stringent local construction and demolition waste management ordinance.

Exceptions:

1. Excavated soil and land-clearing debris.
2. Alternate waste reduction methods developed by working with local agencies if diversion or recycle facilities capable of compliance with this item do not exist or are not located reasonably close to the jobsite.
3. The enforcing agency may make exceptions to the requirements of this section when isolated jobsites are located in areas beyond the haul boundaries of the diversion facility.

4.408.2 CONSTRUCTION WASTE MANAGEMENT PLAN. Submit a construction waste management plan in conformance with Items 1 through 5. The construction waste management plan shall be updated as necessary and shall be available during construction for examination by the enforcing agency.

1. Identify the construction and demolition waste materials to be diverted from disposal by recycling, reuse on the project or salvage for future use or sale.
2. Specify if construction and demolition waste materials will be sorted on-site (source separated) or bulk mixed (single stream).
3. Identify diversion facilities where the construction and demolition waste material collected will be taken.
4. Identify construction methods employed to reduce the amount of construction and demolition waste generated.
5. Specify that the amount of construction and demolition waste materials diverted shall be calculated by weight or volume, but not by both.

4.408.3 WASTE MANAGEMENT COMPANY. Utilize a waste management company, approved by the enforcing agency, which can provide verifiable documentation that the percentage of construction and demolition waste material diverted from the landfill complies with Section 4.408.1.

Note: The owner or contractor may make the determination if the construction and demolition waste materials will be diverted by a waste management company.

4.408.4 WASTE STREAM REDUCTION ALTERNATIVE [LR]. Projects that generate a total combined weight of construction and demolition waste disposed of in landfills, which do not exceed 3.4 lbs./sq.ft. of the building area shall meet the minimum 65% construction waste reduction requirement in Section 4.408.1

4.408.4.1 WASTE STREAM REDUCTION ALTERNATIVE. Projects that generate a total combined weight of construction and demolition waste disposed of in landfills, which do not exceed 2 pounds per square foot of the building area, shall meet the minimum 65% construction waste reduction requirement in Section 4.408.1

4.408.5 DOCUMENTATION. Documentation shall be provided to the enforcing agency which demonstrates compliance with Section 4.408.2, items 1 through 5, Section 4.408.3 or Section 4.408.4..

Notes:

1. Sample forms found in "A Guide to the California Green Building Standards Code (Residential)" located at www.hcd.ca.gov/CALGreen.html may be used to assist in documenting compliance with this section.
2. Mixed construction and demolition debris (C & D) processors can be located at the California Department of Resources Recycling and Recovery (CalRecycle).

4.410 BUILDING MAINTENANCE AND OPERATION

4.410.1 OPERATION AND MAINTENANCE MANUAL. At the time of final inspection, a manual, compact disc, web-based reference or other media acceptable to the enforcing agency which includes all of the following shall be placed in the building:

1. Directions to the owner or occupant that the manual shall remain with the building throughout the life cycle of the structure.
2. Operation and maintenance instructions for the following:
   a. Equipment and appliances, including water-saving devices and systems, HVAC systems, photovoltaic systems, electric vehicle chargers, water-heating systems and other major appliances and equipment.
   b. Roof and yard drainage, including gutters and downspouts.
   c. Space conditioning systems, including condensers and air filters.
   d. Landscape irrigation systems.
   e. Water reuse systems.
3. Information from local utility, water and waste recovery providers on methods to further reduce resource consumption, including recycle programs and locations.
4. Public transportation and/or carpool options available in the area.
5. Educational material on the positive impacts of an interior relative humidity between 30-60 percent and what methods an occupant may use to maintain the relative humidity level in that range.
6. Information about water-conserving landscape and irrigation design and controllers which conserve water.
7. Instructions for maintaining gutters and downspouts and the importance of diverting water at least 5 feet away from the foundation.
8. Information on required routine maintenance measures, including, but not limited to, caulking, painting, grading around the building, etc.
9. Information about state solar energy and incentive programs available.
10. A copy of all special inspections verifications required by the enforcing agency or this code.
11. Information from CAL Fire on maintenance of defensible space around residential structures.

4.410.2 RECYCLING BY OCCUPANTS. Where 5 or more multifamily dwelling units are constructed on a building site, provide readily accessible area(s) that serves all buildings on the site and are identified for the depositing, storage and collection of non-hazardous materials for recycling, including (at a minimum) paper, corrugated cardboard, glass, plastics, organic waster, and metals, or meet a lawfully enacted local recycling ordinance, if more restrictive.

Exception: Rural jurisdictions that meet and apply for the exemption in Public Resources Code Section 42649.82 (a)(2)(A) et seq. are note required to comply with the organic waste portion of this section.

DIVISION 4.5 ENVIRONMENTAL QUALITY

SECTION 4.501 GENERAL

4.501.1 Scope
The provisions of this chapter shall outline means of reducing the quality of air contaminants that are odorous, irritating and/or harmful to the comfort and well being of a building's installers, occupants and neighbors.

SECTION 4.502 DEFINITIONS

5.102.1 DEFINITIONS
The following terms are defined in Chapter 2 *(and are included here for reference)*

AGRIFIBER PRODUCTS. Agrifiber products include wheatboard, strawboard, panel substrates and door cores, not including furniture, fixtures and equipment (FF&E) not considered base building elements.

COMPOSITE WOOD PRODUCTS. Composite wood products include hardwood plywood, particleboard and medium density fiberboard. "Composite wood products" does not include hardboard, structural plywood, structural panels, structural composite lumber, oriented strand board, glued laminated timber, prefabricated wood I-joists or finger-jointed lumber, all as specified in California Code of regulations (CCR), title 17, Section 93120.1.

DIRECT-VENT APPLIANCE. A fuel-burning appliance with a sealed combustion system that draws all air for combustion from the outside atmosphere and discharges all flue gases to the outside atmosphere.

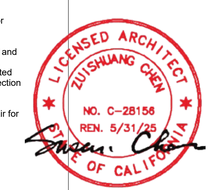

CG-MM1

DISCLAIMER: *THIS DOCUMENT IS PROVIDED AND INTENDED TO BE USED AS A MEANS TO INDICATE AREAS OF COMPLIANCE WITH THE CALIFORNIA GREEN BUILDING STANDARDS (CALGREEN) CODE. DUE TO THE VARIABLES BETWEEN BUILDING DEPARTMENT JURISDICTIONS, THIS CHECKLIST IS TO BE USED ON AN INDIVIDUAL PROJECT BASIS AND MAY BE MODIFIED BY THE END USER TO MEET THOSE INDIVIDUAL NEEDS. THE END USER ASSUMES ALL RESPONSIBILITY ASSOCIATED WITH THE USE OF THIS DOCUMENT, INCLUDING VERIFICATION WITH THE FULL CODE.*

2019 CALIFORNIA GREEN BUILDING STANDARDS CODE

RESIDENTIAL MANDATORY MEASURES, SHEET 1 (July 2021, Includes July 2021 Supplement)

Y = YES
N/A = NOT APPLICABLE
RESPON. PARTY = RESPONSIBLE PARTY (ie: ARCHITECT, ENGINEER, OWNER, CONTRACTOR, INSPECTOR ETC.)

MAXIMUM INCREMENTAL REACTIVITY (MIR). The maximum change in weight of ozone formed by adding a compound to the "Base Reactive Organic Gas (ROG) Mixture" per weight of compound added, expressed to hundredths of a gram (g O^3/g ROC).
Note: MIR values for individual compounds and hydrocarbon solvents are specified in CCR, Title 17, Sections 94700 and 94701.

MOISTURE CONTENT. The weight of the water in wood expressed in percentage of the weight of the oven-dry wood.

PRODUCT-WEIGHTED MIR (PWMIR). The sum of all weighted-MIR for all ingredients in a product subject to this article. The PWMIR is the total product reactivity expressed to hundredths of a gram of ozone formed per gram of product (excluding container and packaging).
Note: PWMIR is calculated according to equations found in CCR, Title 17, Section 94521 (a).

REACTIVE ORGANIC COMPOUND (ROC). Any compound that has the potential, once emitted, to contribute to ozone formation in the troposphere.

VOC. A volatile organic compound (VOC) broadly defined as a chemical compound based on carbon chains or rings with vapor pressures greater than 0.1 millimeters of mercury at room temperature. These compounds typically contain hydrogen and may contain oxygen, nitrogen and other elements. See CCR Title 17, Section 94508(a).

4.503 FIREPLACES

4.503.1 GENERAL. Any installed gas fireplace shall be a direct-vent sealed-combustion type. Any installed woodstove or pellet stove shall comply with U.S. EPA New Source Performance Standards (NSPS) emission limits as applicable, and shall have a permanent label indicating they are certified to meet the emission limits. Woodstoves, pellet stoves and fireplaces shall also comply with applicable local ordinances.

M-0.1 See note #11 under "Calgreen Notes"

4.504 POLLUTANT CONTROL

4.504.1 COVERING OF DUCT OPENINGS & PROTECTION OF MECHANICAL EQUIPMENT DURING CONSTRUCTION. At the time of rough installation, during storage on the construction site and until final startup of the heating, cooling and ventilating equipment, all duct and other related air distribution component openings shall be covered with tape, plastic, sheet metal or other methods acceptable to the enforcing agency to reduce the amount of water, dust or debris which may enter the system.

M-0.1 See note #3 under "Calgreen Notes"

4.504.2 FINISH MATERIAL POLLUTANT CONTROL. Finish materials shall comply with this section.

4.504.2.1 Adhesives, Sealants and Caulks. Adhesives, sealant and caulks used on the project shall meet the requirements of the following standards unless more stringent local or regional air pollution or air quality management district rules apply:

M-0.1 See note #7 under "Calgreen Notes"

1. Adhesives, adhesive bonding primers, adhesive primers, sealants, sealant primers and caulks shall comply with local or regional air pollution control or air quality management district rules where applicable or SCAQMD Rule 1168 VOC limits, as shown in Table 4.504.1 or 4.504.2, as applicable. Such products also shall comply with the Rule 1168 prohibition on the use of certain toxic compounds (chloroform, ethylene dichloride, methylene chloride, perchloroethylene and trichloroethylene), except for aerosol products, as specified in Subsection 2 below.

2. Aerosol adhesives, and smaller unit sizes of adhesives, and sealant or caulking compounds (in units of product, less packaging, which do not weigh more than 1 pound and do not consist of more than 16 fluid ounces) shall comply with statewide VOC standards and other requirements, including prohibitions on use of certain toxic compounds, of *California Code of Regulations*, Title 17, commencing with section 94507.

4.504.2.2 Paints and Coatings. Architectural paints and coatings shall comply with VOC limits in Table 1 of the ARB Architectural Suggested Control Measure, as shown in Table 4.504.3, unless more stringent local limits apply. The VOC content limit for coatings that do not meet the definitions for the specialty coatings categories listed in Table 4.504.3 shall be determined by classifying the coating as a Flat, Nonflat or Nonflat-High Gloss coating, based on its gloss, as defined in subsections 4.21, 4.36, and 4.37 of the 2007 California Air Resources Board, Suggested Control Measure, and the corresponding Flat, Nonflat or Nonflat-High Gloss VOC limit in Table 4.504.3 shall apply.

4.504.2.3 Aerosol Paints and Coatings. Aerosol paints and coatings shall meet the Product-weighted MIR Limits for ROC in Section 94522(a)(2) and other requirements, including prohibitions on use of certain toxic compounds and ozone depleting substances, in Sections 94522(e)(1) and (f)(1) of *California Code of Regulations*, Title 17, commencing with Section 94520; and in areas under the jurisdiction of the Bay Area Air Quality Management District additionally comply with the percent VOC by weight of product limits of Regulation 8, Rule 49.

4.504.2.4 Verification. Verification of compliance with this section shall be provided at the request of the enforcing agency. Documentation may include, but is not limited to, the following:

1. Manufacturer's product specification.
2. Field verification of on-site product containers.

TABLE 4.504.1 - ADHESIVE VOC LIMIT[1,2]

(Less Water and Less Exempt Compounds in Grams per Liter)

ARCHITECTURAL APPLICATIONS	VOC LIMIT
INDOOR CARPET ADHESIVES	50
CARPET PAD ADHESIVES	50
OUTDOOR CARPET ADHESIVES	150
WOOD FLOORING ADHESIVES	100
RUBBER FLOOR ADHESIVES	60
SUBFLOOR ADHESIVES	50
CERAMIC TILE ADHESIVES	65
VCT & ASPHALT TILE ADHESIVES	50
DRYWALL & PANEL ADHESIVES	50
COVE BASE ADHESIVES	50
MULTIPURPOSE CONSTRUCTION ADHESIVE	70
STRUCTURAL GLAZING ADHESIVES	100
SINGLE-PLY ROOF MEMBRANE ADHESIVES	250
OTHER ADHESIVES NOT LISTED	50
SPECIALTY APPLICATIONS	
PVC WELDING	510
CPVC WELDING	490
ABS WELDING	325
PLASTIC CEMENT WELDING	250
ADHESIVE PRIMER FOR PLASTIC	550
CONTACT ADHESIVE	80
SPECIAL PURPOSE CONTACT ADHESIVE	250
STRUCTURAL WOOD MEMBER ADHESIVE	140
TOP & TRIM ADHESIVE	250
SUBSTRATE SPECIFIC APPLICATIONS	
METAL TO METAL	30
PLASTIC FOAMS	50
POROUS MATERIAL (EXCEPT WOOD)	50
WOOD	30
FIBERGLASS	80

1. IF AN ADHESIVE IS USED TO BOND DISSIMILAR SUBSTRATES TOGETHER, THE ADHESIVE WITH THE HIGHEST VOC CONTENT SHALL BE ALLOWED.

2. FOR ADDITIONAL INFORMATION REGARDING METHODS TO MEASURE THE VOC CONTENT SPECIFIED IN THIS TABLE, SEE SOUTH COAST AIR QUALITY MANAGEMENT DISTRICT RULE 1168.

TABLE 4.504.2 - SEALANT VOC LIMIT

(Less Water and Less Exempt Compounds in Grams per Liter)

SEALANTS	VOC LIMIT
ARCHITECTURAL	250
MARINE DECK	760
NONMEMBRANE ROOF	300
ROADWAY	250
SINGLE-PLY ROOF MEMBRANE	450
OTHER	420
SEALANT PRIMERS	
ARCHITECTURAL	
NON-POROUS	250
POROUS	775
MODIFIED BITUMINOUS	500
MARINE DECK	760
OTHER	750

TABLE 4.504.3 - VOC CONTENT LIMITS FOR ARCHITECTURAL COATINGS[2,3]

GRAMS OF VOC PER LITER OF COATING, LESS WATER & LESS EXEMPT COMPOUNDS

COATING CATEGORY	VOC LIMIT
FLAT COATINGS	50
NON-FLAT COATINGS	100
NONFLAT-HIGH GLOSS COATINGS	150
SPECIALTY COATINGS	
ALUMINUM ROOF COATINGS	400
BASEMENT SPECIALTY COATINGS	400
BITUMINOUS ROOF COATINGS	50
BITUMINOUS ROOF PRIMERS	350
BOND BREAKERS	350
CONCRETE CURING COMPOUNDS	350
CONCRETE/MASONRY SEALERS	100
DRIVEWAY SEALERS	50
DRY FOG COATINGS	150
FAUX FINISHING COATINGS	350
FIRE RESISTIVE COATINGS	350
FLOOR COATINGS	100
FORM-RELEASE COMPOUNDS	250
GRAPHIC ARTS COATINGS (SIGN PAINTS)	500
HIGH TEMPERATURE COATINGS	420
INDUSTRIAL MAINTENANCE COATINGS	250
LOW SOLIDS COATINGS[4]	120
MAGNESITE CEMENT COATINGS	450
MASTIC TEXTURE COATINGS	100
METALLIC PIGMENTED COATINGS	500
MULTICOLOR COATINGS	250
PRETREATMENT WASH PRIMERS	420
PRIMERS, SEALERS, & UNDERCOATERS	100
REACTIVE PENETRATING SEALERS	350
RECYCLED COATINGS	250
ROOF COATINGS	50
RUST PREVENTATIVE COATINGS	250
SHELLACS	
CLEAR	730
OPAQUE	550
SPECIALTY PRIMERS, SEALERS & UNDERCOATERS	100
STAINS	250
STONE CONSOLIDANTS	450
SWIMMING POOL COATINGS	340
TRAFFIC MARKING COATINGS	100
TUB & TILE REFINISH COATINGS	420
WATERPROOFING MEMBRANES	250
WOOD COATINGS	275
WOOD PRESERVATIVES	350
ZINC-RICH PRIMERS	340

1. GRAMS OF VOC PER LITER OF COATING, INCLUDING WATER & EXEMPT COMPOUNDS

2. THE SPECIFIED LIMITS REMAIN IN EFFECT UNLESS REVISED LIMITS ARE LISTED IN SUBSEQUENT COLUMNS IN THE TABLE.

3. VALUES IN THIS TABLE ARE DERIVED FROM THOSE SPECIFIED BY THE CALIFORNIA AIR RESOURCES BOARD, ARCHITECTURAL COATINGS SUGGESTED CONTROL MEASURE, FEB. 1, 2008. MORE INFORMATION IS AVAILABLE FROM THE AIR RESOURCES BOARD.

TABLE 4.504.5 - FORMALDEHYDE LIMITS[1]

MAXIMUM FORMALDEHYDE EMISSIONS IN PARTS PER MILLION

PRODUCT	CURRENT LIMIT
HARDWOOD PLYWOOD VENEER CORE	0.05
HARDWOOD PLYWOOD COMPOSITE CORE	0.05
PARTICLE BOARD	0.09
MEDIUM DENSITY FIBERBOARD	0.11
THIN MEDIUM DENSITY FIBERBOARD[2]	0.13

1. VALUES IN THIS TABLE ARE DERIVED FROM THOSE SPECIFIED BY THE CALIF. AIR RESOURCES BOARD, AIR TOXICS CONTROL MEASURE FOR COMPOSITE WOOD AS TESTED IN ACCORDANCE WITH ASTM E 1333. FOR ADDITIONAL INFORMATION, SEE CALIF. CODE OF REGULATIONS, TITLE 17, SECTIONS 93120 THROUGH 93120.12.

2. THIN MEDIUM DENSITY FIBERBOARD HAS A MAXIMUM THICKNESS OF 5/16" (8 MM).

DIVISION 4.5 ENVIRONMENTAL QUALITY (continued)

4.504.3 CARPET SYSTEMS. All carpet installed in the building interior shall meet the requirements of the California Department of Public Health, "Standard Method for the Testing and Evaluation of Volatile Organic Chemical Emissions from Indoor Sources Using Environmental Chambers," Version 1.2, January 2017 (Emission testing method for California Specification 01350)

See California Department of Public Health's website for certification programs and testing labs.

https://www.cdph.ca.gov/Programs/CCDPHP/DEODC/EHLB/IAQ/Pages/VOC.aspx.

4.504.3.1 Carpet cushion. All carpet cushion installed in the building interior shall meet the requirements of the California Department of Public Health, "Standard Method for the Testing and Evaluation of Volatile Organic Chemical Emissions from Indoor Sources Using Environmental Chambers," Version 1.2, January 2017 (Emission testing method for California Specification 01350)

See California Department of Public Health's website for certification programs and testing labs.

https://www.cdph.ca.gov/Programs/CCDPHP/DEODC/EHLB/IAQ/Pages/VOC.aspx.

4.504.3.2 Carpet adhesive. All carpet adhesive shall meet the requirements of Table 4.504.1.

4.504.4 RESILIENT FLOORING SYSTEMS. Where resilient flooring is installed , at least 80% of floor area receiving resilient flooring shall meet the requirements of the California Department of Public Health, "Standard Method for the Testing and Evaluation of Volatile Organic Chemical Emissions from Indoor Sources Using Environmental Chambers," Version 1.2, January 2017 (Emission testing method for California Specification 01350)

See California Department of Public Health's website for certification programs and testing labs.

https://www.cdph.ca.gov/Programs/CCDPHP/DEODC/EHLB/IAQ/Pages/VOC.aspx.

4.504.5 COMPOSITE WOOD PRODUCTS. Hardwood plywood, particleboard and medium density fiberboard composite wood products used on the interior or exterior of the buildings shall meet the requirements for formaldehyde as specified in ARB's Air Toxics Control Measure for Composite Wood (17 CCR 93120 et seq.), by or before the dates specified in those sections, as shown in Table 4.504.5

4.504.5.1 Documentation. Verification of compliance with this section shall be provided as requested by the enforcing agency. Documentation shall include at least one of the following:

1. Product certifications and specifications.
2. Chain of custody certifications.
3. Product labeled and invoiced as meeting the Composite Wood Products regulation (see CCR, Title 17, Section 93120, et seq.).
4. Exterior grade products marked as meeting the PS-1 or PS-2 standards of the Engineered Wood Association, the Australian AS/NZS 2269, European 636 3S standards, and Canadian CSA 0121, CSA 0151, CSA 0153 and CSA 0325 standards.
5. Other methods acceptable to the enforcing agency.

4.505 INTERIOR MOISTURE CONTROL

4.505.1 General. Buildings shall meet or exceed the provisions of the *California Building Standards Code*.

4.505.2 CONCRETE SLAB FOUNDATIONS. Concrete slab foundations required to have a vapor retarder by California Building Code, Chapter 19, or concrete slab-on-ground floors required to have a vapor retarder by the California Residential Code, Chapter 5, shall also comply with this section.

4.505.2.1 Capillary break. A capillary break shall be installed in compliance with at least one of the following:

1. A 4-inch (101.6 mm) thick base of 1/2 inch (12.7mm) or larger clean aggregate shall be provided with a vapor barrier in direct contact with concrete and a concrete mix design, which will address bleeding, shrinkage, and curling, shall be used. For additional information, see American Concrete Institute, ACI 302.2R-06.
2. Other equivalent methods approved by the enforcing agency.
3. A slab design specified by a licensed design professional.

4.505.3 MOISTURE CONTENT OF BUILDING MATERIALS. Building materials with visible signs of water damage shall not be installed. Wall and floor framing shall not be enclosed when the framing members exceed 19 percent moisture content. Moisture content shall be verified in compliance with the following:

1. Moisture content shall be determined with either a probe-type or contact-type moisture meter.Equivalent moisture verification methods may be approved by the enforcing agency and shall satisfy requirements found in Section 101.8 of this code.
2. Moisture readings shall be taken at a point 2 feet (610 mm) to 4 feet (1219 mm) from the grade stamped end of each piece verified.
3. At least three random moisture readings shall be performed on wall and floor framing with documentation acceptable to the enforcing agency provided at the time of approval to enclose the wall and floor framing.

Insulation products which are visibly wet or have a high moisture content shall be replaced or allowed to dry prior to enclosure in wall or floor cavities. Wet-applied insulation products shall follow the manufacturers' drying recommendations prior to enclosure.

4.506 INDOOR AIR QUALITY AND EXHAUST

4.506.1 Bathroom exhaust fans. Each bathroom shall be mechanically ventilated and shall comply with the following:

M-0.1 See note #8 & #9 under "Calgreen Notes"

1. Fans shall be ENERGY STAR compliant and be ducted to terminate outside the building.
2. Unless functioning as a component of a whole house ventilation system, fans must be controlled by a humidity control.
   a. Humidity controls shall be capable of adjustment between a relative humidity range less than or equal to 50% to a maximum of 80%. A humidity control may utilize manual or automatic means of adjustment.
   b. A humidity control may be a separate component to the exhaust fan and is not required to be integral (i.e., built-in)

Notes:

1. For the purposes of this section, a bathroom is a room which contains a bathtub, shower or tub/shower combination.
2. Lighting integral to bathroom exhaust fans shall comply with the *California Energy Code*.

4.507 ENVIRONMENTAL COMFORT

4.507.2 HEATING AND AIR-CONDITIONING SYSTEM DESIGN. Heating and air conditioning systems shall be sized, designed and have their equipment selected using the following methods:

M-0.1 See note #4 under "Calgreen Notes"

1. The heat loss and heat gain is established according to ANSI/ACCA 2 Manual J - 2011 (Residential Load Calculation), ASHRAE handbooks or other equivalent design software or methods.
2. Duct systems are sized according to ANSI/ACCA 1 Manual D - 2014 (Residential Duct Systems), ASHRAE handbooks or other equivalent design software or methods.
3. Select heating and cooling equipment according to ANSI/ACCA 3 Manual S - 2014 (Residential Equipment Selection), or other equivalent design software or methods.

Exception: Use of alternate design temperatures necessary to ensure the system functions are acceptable.

CHAPTER 7
INSTALLER & SPECIAL INSPECTOR QUALIFICATIONS

702 QUALIFICATIONS

702.1 INSTALLER TRAINING. HVAC system installers shall be trained and certified in the proper installation of HVAC systems including ducts and equipment by a nationally or regionally recognized training or certification program. Uncertified persons may perform HVAC installations when under the direct supervision and responsibility of a person trained and certified to install HVAC systems or contractor licensed to install HVAC systems. Examples of acceptable HVAC training and certification programs include but are not limited to the following:

M-0.1 See note #10 under "Calgreen Notes"

1. State certified apprenticeship programs.
2. Public utility training programs.
3. Training programs sponsored by trade, labor or statewide energy consulting or verification organizations.
4. Programs sponsored by manufacturing organizations.
5. Other programs acceptable to the enforcing agency.

702.2 SPECIAL INSPECTION [HCD]. When required by the enforcing agency, the owner or the responsible entity acting as the owner's agent shall employ one or more special inspectors to provide inspection or other duties necessary to substantiate compliance with this code. Special inspectors shall demonstrate competence to the satisfaction of the enforcing agency for the particular type of inspection or task to be performed. In addition to other certifications or qualifications acceptable to the enforcing agency, the following certifications or education may be considered by the enforcing agency when evaluating the qualifications of a special inspector:

M-0.1 See note #12 under "Calgreen Notes"

1. Certification by a national or regional green building program or standard publisher.
2. Certification by a statewide energy consulting or verification organization, such as HERS raters, building performance contractors, and home energy auditors.
3. Successful completion of a third party apprentice training program in the appropriate trade.
4. Other programs acceptable to the enforcing agency.

Notes:

1. Special inspectors shall be independent entities with no financial interest in the materials or the project they are inspecting for compliance with this code.
2. HERS raters are special inspectors certified by the California Energy Commission (CEC) to rate homes in California according to the Home Energy Rating System (HERS).

[BSC] When required by the enforcing agency, the owner or the responsible entity acting as the owner's agent shall employ one or more special inspectors to provide inspection or other duties necessary to substantiate compliance with this code. Special inspectors shall demonstrate competence to the satisfaction of the enforcing agency for the particular type of inspection or task to be performed. In addition, the special inspector shall have a certification from a recognized state, national or international association, as determined by the local agency. The area of certification shall be closely related to the primary job function, as determined by the local agency.

Note: Special inspectors shall be independent entities with no financial interest in the materials or the project they are inspecting for compliance with this code.

703 VERIFICATIONS

703.1 DOCUMENTATION. Documentation used to show compliance with this code shall include but is not limited to, construction documents, plans, specifications, builder or installer certification, inspection reports, or other methods acceptable to the enforcing agency which demonstrate substantial conformance. When specific documentation or special inspection is necessary to verify compliance, that method of compliance will be specified in the appropriate section or identified applicable checklist.

M-0.1 See note #13 under "Calgreen Notes"

LICENSED ARCHITECT ZUISHUANG CHEN NO. C-28156 REN. 5/31/25 STATE OF CALIFORNIA

CG-MM2

DISCLAIMER: *THIS DOCUMENT IS PROVIDED AND INTENDED TO BE USED AS A MEANS TO INDICATE AREAS OF COMPLIANCE WITH THE CALIFORNIA GREEN BUILDING STANDARDS (CALGREEN) CODE. DUE TO THE VARIABLES BETWEEN BUILDING DEPARTMENT JURISDICTIONS, THIS CHECKLIST IS TO BE USED ON AN INDIVIDUAL PROJECT BASIS AND MAY BE MODIFIED BY THE END USER TO MEET THOSE INDIVIDUAL NEEDS. THE END USER ASSUMES ALL RESPONSIBILITY ASSOCIATED WITH THE USE OF THIS DOCUMENT, INCLUDING VERIFICATION WITH THE FULL CODE.*

2019 CALIFORNIA GREEN BUILDING STANDARDS CODE

RESIDENTIAL MANDATORY MEASURES, SHEET 1 (July 2021, Includes July 2021 Supplement)

Y = YES
N/A = NOT APPLICABLE
RESPON. PARTY = RESPONSIBLE PARTY (ie: ARCHITECT, ENGINEER, OWNER, CONTRACTOR, INSPECTOR ETC.)

Y	N/A	RESPON. PARTY

CHAPTER 3
GREEN BUILDING
SECTION 301 GENERAL

301.1 SCOPE. Buildings shall be designed to include the green building measures specified as mandatory in the application checklists contained in this code. Voluntary green building measures are also included in the application checklists and may be included in the design and construction of structures covered by this code, but are not required unless adopted by a city, county, or city and county as specified in Section 101.7.

301.1.1 Additions and alterations. [HCD] The mandatory provisions of Chapter 4 shall be applied to additions or alterations of existing residential buildings where the addition or alteration increases the building's conditioned area, volume, or size. The requirements shall apply only to and/or within the specific area of the addition or alteration.

Note: On and after January 1, 2014, residential buildings undergoing permitted alterations, additions, or improvements shall replace noncompliant plumbing fixtures with water-conserving plumbing fixtures. Plumbing fixture replacement is required prior to issuance of a certificate of final completion, certificate of occupancy or final permit approval by the local building department. See Civil Code Section 1101.1, et seq., for the definition of a noncompliant plumbing fixture, types of residential buildings affected and other important enactment dates.

301.2 LOW-RISE AND HIGH-RISE RESIDENTIAL BUILDINGS. [HCD] The provisions of individual sections of CALGreen may apply to either low-rise residential buildings high-rise residential buildings, or both. Individual sections will be designated by banners to indicate where the section applies specifically to low-rise only (LR) or high-rise only (HR). When the section applies to both low-rise and high-rise buildings, no banner will be used.

SECTION 302 MIXED OCCUPANCY BUILDINGS

302.1 MIXED OCCUPANCY BUILDINGS. In mixed occupancy buildings, each portion of a building shall comply with the specific green building measures applicable to each specific occupancy.

Exceptions:
1. [HCD] Accessory structures and accessory occupancies serving residential buildings shall comply with Chapter 4 and Appendix A4, as applicable.
2. [HCD] For purposes of CALGreen, live/work units, complying with Section 419 of the *California Building Code*, shall not be considered mixed occupancies. Live/Work units shall comply with Chapter 4 and Appendix A4, as applicable.

DIVISION 4.1 PLANNING AND DESIGN

ABBREVIATION DEFINITIONS:

HCD	Department of Housing and Community Development
BSC	California Building Standards Commission
DSA-SS	Division of the State Architect, Structural Safety
OSHPD	Office of Statewide Health Planning and Development
LR	Low Rise
HR	High Rise
AA	Additions and Alterations
N	New

CHAPTER 4
RESIDENTIAL MANDATORY MEASURES

SECTION 4.102 DEFINITIONS

4.102.1 DEFINITIONS
The following terms are defined in Chapter 2 *(and are included here for reference)*

FRENCH DRAIN. A trench, hole or other depressed area loosely filled with rock, gravel, fragments of brick or similar pervious material used to collect or channel drainage or runoff water.

WATTLES. Wattles are used to reduce sediment in runoff. Wattles are often constructed of natural plant materials such as hay, straw or similar material shaped in the form of tubes and placed on a downflow slope. Wattles are also used for perimeter and inlet controls.

4.106 SITE DEVELOPMENT

4.106.1 GENERAL. Preservation and use of available natural resources shall be accomplished through evaluation and careful planning to minimize negative effects on the site and adjacent areas. Preservation of slopes, management of storm water drainage and erosion controls shall comply with this section.

4.106.2 STORM WATER DRAINAGE AND RETENTION DURING CONSTRUCTION. Projects which disturb less than one acre of soil and are not part of a larger common plan of development which in total disturbs one acre or more, shall manage storm water drainage during construction. In order to manage storm water drainage during construction, one or more of the following measures shall be implemented to prevent flooding of adjacent property, prevent erosion and retain soil runoff on the site.

1. Retention basins of sufficient size shall be utilized to retain storm water on the site.
2. Where storm water is conveyed to a public drainage system, collection point, gutter or similar disposal method, water shall be filtered by use of a barrier system, wattle or other method approved by the enforcing agency.
3. Compliance with a lawfully enacted storm water management ordinance.

Note: Refer to the State Water Resources Control Board for projects which disturb one acre or more of soil, or are part of a larger common plan of development which in total disturbs one acre or more of soil.

(Website: https://www.waterboards.ca.gov/water_issues/programs/stormwater/construction.html)

4.106.3 GRADING AND PAVING. Construction plans shall indicate how the site grading or drainage system will manage all surface water flows to keep water from entering buildings. Examples of methods to manage surface water include, but are not limited to, the following:

1. Swales
2. Water collection and disposal systems
3. French drains
4. Water retention gardens
5. Other water measures which keep surface water away from buildings and aid in groundwater recharge.

Exception: Additions and alterations not altering the drainage path.

4.106.4 Electric vehicle (EV) charging for new construction. New construction shall comply with Sections 4.106.4.1, 4.106.4.2, or 4.106.4.3 to facilitate future installation and use of EV chargers. Electric vehicle supply equipment (EVSE) shall be installed in accordance with the *California Electrical Code,* Article 625.

Exceptions:
1. On a case-by-case basis, where the local enforcing agency has determined EV charging and infrastructure are not feasible based upon one or more of the following conditions:
   1.1 Where there is no commercial power supply.
   1.2 Where there is evidence substantiating that meeting the requirements will alter the local utility infrastructure design requirements on the utility side of the meter so as to increase the utility side cost to the homeowner or the developer by more than $400.00 per dwelling unit.
2. Accessory Dwelling Units (ADU) and Junior Accessory Dwelling Units (JADU) without additional parking facilities.

4.106.4.1 New one- and two-family dwellings and townhouses with attached private garages. For each dwelling unit, install a listed raceway to accommodate a dedicated 208/240-volt branch circuit. The raceway shall not be less than trade size 1 (nominal 1-inch inside diameter). The raceway shall originate at the main service or subpanel and shall terminate into a listed cabinet, box or other enclosure in close proximity to the proposed location of an EV charger. Raceways are required to be continuous at enclosed, inaccessible or concealed areas and spaces. The service panel and/or subpanel shall provide capacity to install a 40-ampere 208/240-volt minimum dedicated branch circuit and space(s) reserved to permit installation of a branch circuit overcurrent protective device.

Exemption: A raceway is not required if a minimum 40-ampere 208/240-volt dedicated EV branch circuit is installed in close proximity to the proposed location of an EV charger at the time of original construction in accordance with the *California Electrical Code.*

4.106.4.1.1 Identification. The service panel or subpanel circuit directory shall identify the overcurrent protective device space(s) reserved for future EV charging as "EV CAPABLE". The raceway termination location shall be permanently and visibly marked as "EV CAPABLE".

4.106.4.2 New multifamily dwellings. If residential parking is available, ten (10) percent of the total number of parking spaces on a building site, provided for all types of parking facilities, shall be electric vehicle charging spaces (EV spaces) capable of supporting future EVSE. Calculations for the required number of EV spaces shall be rounded up to the nearest whole number.

Notes:
1. Construction documents are intended to demonstrate the project's capability and capacity for facilitating future EV charging.
2. There is no requirement for EV spaces to be constructed or available until EV chargers are installed for use.
3. A parking space served by electric vehicle supply equipment or designated as a future EV charging space shall count as at least one standard automobile parking space for the purpose of complying with any applicable minimum parking space requirements established by a local jurisdiction. See *Vehicle Code* Section 22511.2 for further details.

4.106.4.2.1 Electric vehicle charging space (EV space) locations. Construction documents shall indicate the location of proposed EV spaces. Where common use parking is provided at least one EV space shall be located in the common use parking area and shall be available for use by all residents.

4.106.4.2.1.1 Electric Vehicle Charging Stations (EVCS) When EV chargers are installed, EV spaces required by Section 4.106.2.2, Item 3, shall comply with at least one of the following options:

1. The EV space shall be located adjacent to an accessible parking space meeting the requirements of the *California Building Code,* Chapter 11A, to allow use of the EV charger from the accessible parking space.
2. The EV space shall be located on an accessible route, as defined in the *California Building Code,* Chapter 2, to the building.

Exception: Electric vehicle charging stations designed and constructed in compliance with the *California Building Code*, Chapter 11B, are not required to comply with Section 4.106.4.2.1.1 and Section 4.106.4.2.2, Item 3.

Note: Electric Vehicle charging stations serving public housing are required to comply with the *California Building Code*, Chapter 11B.

4.106.4.2.2 Electric vehicle charging space (EV space) dimensions. The EV space shall be designed to comply with the following:

1. The minimum length of each EV space shall be 18 feet (5486 mm).
2. The minimum width of each EV space shall be 9 feet (2743 mm).
3. One in every 25 EV spaces, but not less than one EV space, shall have an 8-foot (2438 mm) wide minimum aisle. A 5-foot (1524 mm) wide minimum aisle shall be permitted provided the minimum width of the EV space is 12 feet (3658 mm).
   a. Surface slope for this EV space and the aisle shall not exceed 1 unit vertical in 48 units horizontal (2.083 percent slope) in any direction.

4.106.4.2.3 Single EV space required. Install a listed raceway capable of accommodating a 208/240-volt dedicated branch circuit. The raceway shall not be less than trade size 1 (nominal 1-inch inside diameter). The raceway shall originate at the main service or subpanel and shall terminate into a listed cabinet, box or enclosure in close proximity to the proposed location of the EV space. Construction documents shall identify the raceway termination point. The service panel and/or subpanel shall provide capacity to install a 40-ampere minimum dedicated branch circuit and space(s) reserved to permit installation of a branch circuit overcurrent protective device.

Exemption: A raceway is not required if a minimum 40-ampere 208/240-volt dedicated EV branch circuit is installed in close proximity to the proposed location of an EV charger, at the time of original construction in accordance with the *California Electrical Code*.

4.106.4.2.4 Multiple EV spaces required. Construction documents shall indicate the raceway termination point and proposed location of future EV spaces and EV chargers. Construction documents shall also provide information on amperage of future EVSE, raceway method(s), wiring schematics and electrical load calculations to verify that the electrical panel service capacity and electrical system, including any on-site distribution transformer(s), have sufficient capacity to simultaneously charge all EVs at all required EV spaces at the full rated amperage of the EVSE. Plan design shall be based upon a 40-ampere minimum branch circuit. Required raceways and related components that are planned to be installed underground, enclosed, inaccessible or in concealed areas and spaces shall be installed at the time of original construction.

Exemption: A raceway is not required if a minimum 40-ampere 208/240-volt dedicated EV branch circuit is installed in close proximity to the proposed location of an EV charger, at the time of original construction in accordance with the *California Electrical Code*.

4.106.4.2.5 Identification. The service panel or subpanel circuit directory shall identify the overcurrent protective device space(s) reserved for future EV charging purposes as "EV CAPABLE" in accordance with the *California Electrical Code.*

4.106.4.3 New hotels and motels. All newly constructed hotels and motels shall provide EV spaces capable of supporting future installation of EVSE. The construction documents shall identify the location of the EV spaces.

Notes:

1. Construction documents are intended to demonstrate the project's capability and capacity or facilitating future EV charging.
2. There is no requirement for EV spaces to be constructed or available until EV chargers are installed for use.
3. A parking space served by electrical vehicle supple equipment or designed as a future EV charging space shall count as at least one standard automobile parking space for the purpose of complying with any applicable minimum parking space requirements established by a local jurisdiction. See *Vehicle Code* Section 22511.2 for further details.

4.106.4.3.1 Number of required EV spaces. The number of required EV spaces shall be based on the total number of parking spaces provided for all types of parking facilities in accordance with Table 4.106.4.3.1. Calculations for the required number of EV spaces shall be rounded up to the nearest whole number.

TABLE 4.106.4.3.1

TOTAL NUMBER OF PARKING SPACES	NUMBER OF REQUIRED EV SPACES
0-9	0
10-25	1
26-50	2
51-75	4
76-100	5
101-150	7
151-200	10
201 and over	6 percent of total

4.106.4.3.2 Electric vehicle charging space (EV space) dimensions. The EV spaces shall be designed to comply with the following:

1. The minimum length of each EV space shall be 18 feet (5486mm).
2. The minimum width of each EV space shall be 9 feet (2743mm)

4.106.4.3.3 Single EV space required. When a single EV space is required, the EV space shall be designed in accordance with Section 4.106.4.2.3.

4.106.4.3.4 Multiple EV spaces required. When multiple EV spaces are required, the EV spaces shall be designed in accordance with Section 4.106.4.2.4.

4.106.4.3.5 Identification. The service panels or sub-panels shall be identified in accordance with Section 4.106.4.2.5.

4.106.4.3.6 Accessible EV spaces. In addition to the requirements in Section 4.106.4.3, EV spaces for hotels/motels and all EVSE, when installed, shall comply with the accessibility provisions for the EV charging stations in the *California Building Code*, Chapter 11B.

DIVISION 4.2 ENERGY EFFICIENCY

4.201 GENERAL

4.201.1 SCOPE. For the purposes of mandatory energy efficiency standards in this code, the California Energy Commission will continue to adopt mandatory standards.

DIVISION 4.3 WATER EFFICIENCY AND CONSERVATION

4.303 INDOOR WATER USE

4.303.1 WATER CONSERVING PLUMBING FIXTURES AND FITTINGS. Plumbing fixtures (water closets and urinals) and fittings (faucets and showerheads) shall comply with the sections 4.303.1.1, 4.303.1.2, 4.303.1.3, and 4.303.4.4.

Note: All noncompliant plumbing fixtures in any residential real property shall be replaced with water-conserving plumbing fixtures. Plumbing fixture replacement is required prior to issuance of a certificate of final completion, certificate of occupancy, or final permit approval by the local building department. See Civil Code Section 1101.1, et seq., for the definition of a noncompliant plumbing fixture, types of residential buildings affected and other important enactment dates.

4.303.1.1 Water Closets. The effective flush volume of all water closets shall not exceed 1.28 gallons per flush. Tank-type water closets shall be certified to the performance criteria of the U.S. EPA WaterSense Specification for Tank-type Toilets.

Note: The effective flush volume of dual flush toilets is defined as the composite, average flush volume of two reduced flushes and one full flush.

4.303.1.2 Urinals. The effective flush volume of wall mounted urinals shall not exceed 0.125 gallons per flush. The effective flush volume of all other urinals shall not exceed 0.5 gallons per flush.

4.303.1.3 Showerheads.

4.303.1.3.1 Single Showerhead. Showerheads shall have a maximum flow rate of not more than 1.8 gallons per minute at 80 psi. Showerheads shall be certified to the performance criteria of the U.S. EPA WaterSense Specification for Showerheads.

4.303.1.3.2 Multiple showerheads serving one shower. When a shower is served by more than one showerhead, the combined flow rate of all the showerheads and/or other shower outlets controlled by a single valve shall not exceed 1.8 gallons per minute at 80 psi, or the shower shall be designed to only allow one shower outlet to be in operation at a time.

Note: A hand-held shower shall be considered a showerhead.

4.303.1.4 Faucets.

4.303.1.4.1 Residential Lavatory Faucets. The maximum flow rate of residential lavatory faucets shall not exceed 1.2 gallons per minute at 60 psi. The minimum flow rate of residential lavatory faucets shall not be less than 0.8 gallons per minute at 20 psi.

4.303.1.4.2 Lavatory Faucets in Common and Public Use Areas. The maximum flow rate of lavatory faucets installed in common and public use areas (outside of dwellings or sleeping units) in residential buildings shall not exceed 0.5 gallons per minute at 60 psi.

4.303.1.4.3 Metering Faucets. Metering faucets when installed in residential buildings shall not deliver more than 0.2 gallons per cycle.

4.303.1.4.4 Kitchen Faucets. The maximum flow rate of kitchen faucets shall not exceed 1.8 gallons per minute at 60 psi. Kitchen faucets may temporarily increase the flow above the maximum rate, but not to exceed 2.2 gallons per minute at 60 psi, and must default to a maximum flow rate of 1.8 gallons per minute at 60 psi.

Note: Where complying faucets are unavailable, aerators or other means may be used to achieve reduction.

4.303.1.4.5 Pre-rinse spray valves.
When installed, shall meet the requirements in the *California Code of Regulations*, Title 20 (Appliance Efficiency Regulations), Sections 1605.1 (h)(4) Table H-2, Section 1605.3 (h)(4)(A), and Section 1607 (d)(7) and shall be equipped with an integral automatic shutoff.

FOR REFERENCE ONLY: The following table and code section have been reprinted from the *California Code of Regulations*, Title 20 (Appliance Efficiency Regulations),Section 1605.1 (h)(4) and Section 1605.3 (h)(4)(A).

TABLE H-2

STANDARDS FOR COMMERCIAL PRE-RINSE SPRAY VALUES MANUFACTURED ON OR AFTER JANUARY 28, 2019

PRODUCT CLASS [spray force in ounce force (ozf)]	MAXIMUM FLOW RATE (gpm)
Product Class 1 (≤ 5.0 ozf)	1.00
Product Class 2 (> 5.0 ozf and ≤ 8.0 ozf)	1.20
Product Class 3 (> 8.0 ozf)	1.28

Title 20 Section 1605.3 (h)(4)(A): Commercial prerinse spray values manufactured on or after January 1, 2006, shall have a minimum spray force of not less than 4.0 ounces-force (ozf)[113 grams-force(gf)]

4.303.2 Submeters for multifamily buildings and dwelling units in mixed-used residential/commercial buildings.
Submeters shall be installed to measure water usage of individual rental dwelling units in accordance with the *California Plumbing Code*.

4.303.3 Standards for plumbing fixtures and fittings. Plumbing fixtures and fittings shall be installed in accordance with the *California Plumbing Code*, and shall meet the applicable standards referenced in Table 1701.1 of the *California Plumbing Code*.

NOTE:
THIS TABLE COMPILES THE DATA IN SECTION 4.303.1, AND IS INCLUDED AS A CONVENIENCE FOR THE USER.

TABLE - MAXIMUM FIXTURE WATER USE

FIXTURE TYPE	FLOW RATE
SHOWER HEADS (RESIDENTIAL)	1.8 GMP @ 80 PSI
LAVATORY FAUCETS (RESIDENTIAL)	MAX. 1.2 GPM @ 60 PSI MIN. 0.8 GPM @ 20 PSI
LAVATORY FAUCETS IN COMMON & PUBLIC USE AREAS	0.5 GPM @ 60 PSI
KITCHEN FAUCETS	1.8 GPM @ 60 PSI
METERING FAUCETS	0.2 GAL/CYCLE
WATER CLOSET	1.28 GAL/FLUSH
URINALS	0.125 GAL/FLUSH

4.304 OUTDOOR WATER USE

4.304.1 OUTDOOR POTABLE WATER USE IN LANDSCAPE AREAS. Residential developments shall comply with a local water efficient landscape ordinance or the current California Department of Water Resources' Model Water Efficient Landscape Ordinance (MWELO), whichever is more stringent.

NOTES:

1. The Model Water Efficient Landscape Ordinance (MWELO) is located in the *California Code Regulations,* Title 23, Chapter 2.7, Division 2. MWELO and supporting documents, including water budget calculator, are available at: https://www.water.ca.gov/

DIVISION 4.4 MATERIAL CONSERVATION AND RESOURCE EFFICIENCY

4.406 ENHANCED DURABILITY AND REDUCED MAINTENANCE

4.406.1 RODENT PROOFING. Annular spaces around pipes, electric cables, conduits or other openings in sole/bottom plates at exterior walls shall be protected against the passage of rodents by closing such openings with cement mortar, concrete masonry or a similar method acceptable to the enforcing agency.

4.408 CONSTRUCTION WASTE REDUCTION, DISPOSAL AND RECYCLING

4.408.1 CONSTRUCTION WASTE MANAGEMENT. Recycle and/or salvage for reuse a minimum of 65 percent of the non-hazardous construction and demolition waste in accordance with either Section 4.408.2, 4.408.3 or 4.408.4, or meet a more stringent local construction and demolition waste management ordinance.

Exceptions:

1. Excavated soil and land-clearing debris.
2. Alternate waste reduction methods developed by working with local agencies if diversion or recycle facilities capable of compliance with this item do not exist or are not located reasonably close to the jobsite.
3. The enforcing agency may make exceptions to the requirements of this section when isolated jobsites are located in areas beyond the haul boundaries of the diversion facility.

4.408.2 CONSTRUCTION WASTE MANAGEMENT PLAN. Submit a construction waste management plan in conformance with Items 1 through 5. The construction waste management plan shall be updated as necessary and shall be available during construction for examination by the enforcing agency.

1. Identify the construction and demolition waste materials to be diverted from disposal by recycling, reuse on the project or salvage for future use or sale.
2. Specify if construction and demolition waste materials will be sorted on-site (source separated) or bulk mixed (single stream).
3. Identify diversion facilities where the construction and demolition waste material collected will be taken.
4. Identify construction methods employed to reduce the amount of construction and demolition waste generated.
5. Specify that the amount of construction and demolition waste materials diverted shall be calculated by weight or volume, but not by both.

4.408.3 WASTE MANAGEMENT COMPANY. Utilize a waste management company, approved by the enforcing agency, which can provide verifiable documentation that the percentage of construction and demolition waste material diverted from the landfill complies with Section 4.408.1.

Note: The owner or contractor may make the determination if the construction and demolition waste materials will be diverted by a waste management company.

4.408.4 WASTE STREAM REDUCTION ALTERNATIVE [LR]. Projects that generate a total combined weight of construction and demolition waste disposed of in landfills, which do not exceed 3.4 lbs./sq.ft. of the building area shall meet the minimum 65% construction waste reduction requirement in Section 4.408.1

4.408.4.1 WASTE STREAM REDUCTION ALTERNATIVE. Projects that generate a total combined weight of construction and demolition waste disposed of in landfills, which do not exceed 2 pounds per square foot of the building area, shall meet the minimum 65% construction waste reduction requirement in Section 4.408.1

4.408.5 DOCUMENTATION. Documentation shall be provided to the enforcing agency which demonstrates compliance with Section 4.408.2, items 1 through 5, Section 4.408.3 or Section 4.408.4..

Notes:

1. Sample forms found in "A Guide to the California Green Building Standards Code (Residential)" located at www.hcd.ca.gov/CALGreen.html may be used to assist in documenting compliance with this section.
2. Mixed construction and demolition debris (C & D) processors can be located at the California Department of Resources Recycling and Recovery (CalRecycle).

4.410 BUILDING MAINTENANCE AND OPERATION

4.410.1 OPERATION AND MAINTENANCE MANUAL. At the time of final inspection, a manual, compact disc, web-based reference or other media acceptable to the enforcing agency which includes all of the following shall be placed in the building:

1. Directions to the owner or occupant that the manual shall remain with the building throughout the life cycle of the structure.
2. Operation and maintenance instructions for the following:
   a. Equipment and appliances, including water-saving devices and systems, HVAC systems, photovoltaic systems, electric vehicle chargers, water-heating systems and other major appliances and equipment.
   b. Roof and yard drainage, including gutters and downspouts.
   c. Space conditioning systems, including condensers and air filters.
   d. Landscape irrigation systems.
   e. Water reuse systems.
3. Information from local utility, water and waste recovery providers on methods to further reduce resource consumption, including recycle programs and locations.
4. Public transportation and/or carpool options available in the area.
5. Educational material on the positive impacts of an interior relative humidity between 30-60 percent and what methods an occupant may use to maintain the relative humidity level in that range.
6. Information about water-conserving landscape and irrigation design and controllers which conserve water.
7. Instructions for maintaining gutters and downspouts and the importance of diverting water at least 5 feet away from the foundation.
8. Information on required routine maintenance measures, including, but not limited to, caulking, painting, grading around the building, etc.
9. Information about state solar energy and incentive programs available.
10. A copy of all special inspections verifications required by the enforcing agency or this code.
11. Information from CAL Fire on maintenance of defensible space around residential structures.

4.410.2 RECYCLING BY OCCUPANTS. Where 5 or more multifamily dwelling units are constructed on a building site, provide readily accessible area(s) that serves all buildings on the site and are identified for the depositing, storage and collection of non-hazardous materials for recycling, including (at a minimum) paper, corrugated cardboard, glass, plastics, organic waster, and metals, or meet a lawfully enacted local recycling ordinance, if more restrictive.

Exception: Rural jurisdictions that meet and apply for the exemption in Public Resources Code Section 42649.82 (a)(2)(A) et seq. are note required to comply with the organic waste portion of this section.

DIVISION 4.5 ENVIRONMENTAL QUALITY

SECTION 4.501 GENERAL

4.501.1 Scope
The provisions of this chapter shall outline means of reducing the quality of air contaminants that are odorous, irritating and/or harmful to the comfort and well being of a building's installers, occupants and neighbors.

SECTION 4.502 DEFINITIONS

5.102.1 DEFINITIONS
The following terms are defined in Chapter 2 *(and are included here for reference)*

AGRIFIBER PRODUCTS. Agrifiber products include wheatboard, strawboard, panel substrates and door cores, not including furniture, fixtures and equipment (FF&E) not considered base building elements.

COMPOSITE WOOD PRODUCTS. Composite wood products include hardwood plywood, particleboard and medium density fiberboard. "Composite wood products" does not include hardboard, structural plywood, structural panels, structural composite lumber, oriented strand board, glued laminated timber, prefabricated wood I-joists or finger-jointed lumber, all as specified in California Code of regulations (CCR), title 17, Section 93120.1.

DIRECT-VENT APPLIANCE. A fuel-burning appliance with a sealed combustion system that draws all air for combustion from the outside atmosphere and discharges all flue gases to the outside atmosphere.

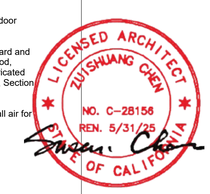

CG-MM1

DISCLAIMER: *THIS DOCUMENT IS PROVIDED AND INTENDED TO BE USED AS A MEANS TO INDICATE AREAS OF COMPLIANCE WITH THE CALIFORNIA GREEN BUILDING STANDARDS (CALGREEN) CODE. DUE TO THE VARIABLES BETWEEN BUILDING DEPARTMENT JURISDICTIONS, THIS CHECKLIST IS TO BE USED ON AN INDIVIDUAL PROJECT BASIS AND MAY BE MODIFIED BY THE END USER TO MEET THOSE INDIVIDUAL NEEDS. THE END USER ASSUMES ALL RESPONSIBILITY ASSOCIATED WITH THE USE OF THIS DOCUMENT, INCLUDING VERIFICATION WITH THE FULL CODE.*

2019 CALIFORNIA GREEN BUILDING STANDARDS CODE

RESIDENTIAL MANDATORY MEASURES, SHEET 1 (July 2021, Includes July 2021 Supplement)

Y = YES
N/A = NOT APPLICABLE
RESPON. PARTY = RESPONSIBLE PARTY (ie: ARCHITECT, ENGINEER, OWNER, CONTRACTOR, INSPECTOR ETC.)

MAXIMUM INCREMENTAL REACTIVITY (MIR). The maximum change in weight of ozone formed by adding a compound to the "Base Reactive Organic Gas (ROG) Mixture" per weight of compound added, expressed to hundredths of a gram (g O^3/g ROC).
Note: MIR values for individual compounds and hydrocarbon solvents are specified in CCR, Title 17, Sections 94700 and 94701.

MOISTURE CONTENT. The weight of the water in wood expressed in percentage of the weight of the oven-dry wood.

PRODUCT-WEIGHTED MIR (PWMIR). The sum of all weighted-MIR for all ingredients in a product subject to this article. The PWMIR is the total product reactivity expressed to hundredths of a gram of ozone formed per gram of product (excluding container and packaging).
Note: PWMIR is calculated according to equations found in CCR, Title 17, Section 94521 (a).

REACTIVE ORGANIC COMPOUND (ROC). Any compound that has the potential, once emitted, to contribute to ozone formation in the troposphere.

VOC. A volatile organic compound (VOC) broadly defined as a chemical compound based on carbon chains or rings with vapor pressures greater than 0.1 millimeters of mercury at room temperature. These compounds typically contain hydrogen and may contain oxygen, nitrogen and other elements. See CCR Title 17, Section 94508(a).

4.503 FIREPLACES

4.503.1 GENERAL. Any installed gas fireplace shall be a direct-vent sealed-combustion type. Any installed woodstove or pellet stove shall comply with U.S. EPA New Source Performance Standards (NSPS) emission limits as applicable, and shall have a permanent label indicating they are certified to meet the emission limits. Woodstoves, pellet stoves and fireplaces shall also comply with applicable local ordinances.

M-0.1 See note #11 under "Calgreen Notes"

4.504 POLLUTANT CONTROL

4.504.1 COVERING OF DUCT OPENINGS & PROTECTION OF MECHANICAL EQUIPMENT DURING CONSTRUCTION. At the time of rough installation, during storage on the construction site and until final startup of the heating, cooling and ventilating equipment, all duct and other related air distribution component openings shall be covered with tape, plastic, sheet metal or other methods acceptable to the enforcing agency to reduce the amount of water, dust or debris which may enter the system.

M-0.1 See note #3 under "Calgreen Notes"

4.504.2 FINISH MATERIAL POLLUTANT CONTROL. Finish materials shall comply with this section.

4.504.2.1 Adhesives, Sealants and Caulks. Adhesives, sealant and caulks used on the project shall meet the requirements of the following standards unless more stringent local or regional air pollution or air quality management district rules apply:

M-0.1 See note #7 under "Calgreen Notes"

1. Adhesives, adhesive bonding primers, adhesive primers, sealants, sealant primers and caulks shall comply with local or regional air pollution control or air quality management district rules where applicable or SCAQMD Rule 1168 VOC limits, as shown in Table 4.504.1 or 4.504.2, as applicable. Such products also shall comply with the Rule 1168 prohibition on the use of certain toxic compounds (chloroform, ethylene dichloride, methylene chloride, perchloroethylene and tricloroethylene), except for aerosol products, as specified in Subsection 2 below.

2. Aerosol adhesives, and smaller unit sizes of adhesives, and sealant or caulking compounds (in units of product, less packaging, which do not weigh more than 1 pound and do not consist of more than 16 fluid ounces) shall comply with statewide VOC standards and other requirements, including prohibitions on use of certain toxic compounds, of *California Code of Regulations*, Title 17, commencing with section 94507.

4.504.2.2 Paints and Coatings. Architectural paints and coatings shall comply with VOC limits in Table 1 of the ARB Architectural Suggested Control Measure, as shown in Table 4.504.3, unless more stringent local limits apply. The VOC content limit for coatings that do not meet the definitions for the specialty coatings categories listed in Table 4.504.3 shall be determined by classifying the coating as a Flat, Nonflat or Nonflat-High Gloss coating, based on its gloss, as defined in subsections 4.21, 4.36, and 4.37 of the 2007 California Air Resources Board, Suggested Control Measure, and the corresponding Flat, Nonflat or Nonflat-High Gloss VOC limit in Table 4.504.3 shall apply.

4.504.2.3 Aerosol Paints and Coatings. Aerosol paints and coatings shall meet the Product-weighted MIR Limits for ROC in Section 94522(a)(2) and other requirements, including prohibitions on use of certain toxic compounds and ozone depleting substances, in Sections 94522(e)(1) and (f)(1) of *California Code of Regulations*, Title 17, commencing with Section 94520; and in areas under the jurisdiction of the Bay Area Air Quality Management District additionally comply with the percent VOC by weight of product limits of Regulation 8, Rule 49.

4.504.2.4 Verification. Verification of compliance with this section shall be provided at the request of the enforcing agency. Documentation may include, but is not limited to, the following:

1. Manufacturer's product specification.
2. Field verification of on-site product containers.

TABLE 4.504.1 - ADHESIVE VOC LIMIT[1,2]

(Less Water and Less Exempt Compounds in Grams per Liter)

ARCHITECTURAL APPLICATIONS	VOC LIMIT
INDOOR CARPET ADHESIVES	50
CARPET PAD ADHESIVES	50
OUTDOOR CARPET ADHESIVES	150
WOOD FLOORING ADHESIVES	100
RUBBER FLOOR ADHESIVES	60
SUBFLOOR ADHESIVES	50
CERAMIC TILE ADHESIVES	65
VCT & ASPHALT TILE ADHESIVES	50
DRYWALL & PANEL ADHESIVES	50
COVE BASE ADHESIVES	50
MULTIPURPOSE CONSTRUCTION ADHESIVE	70
STRUCTURAL GLAZING ADHESIVES	100
SINGLE-PLY ROOF MEMBRANE ADHESIVES	250
OTHER ADHESIVES NOT LISTED	50
SPECIALTY APPLICATIONS	
PVC WELDING	510
CPVC WELDING	490
ABS WELDING	325
PLASTIC CEMENT WELDING	250
ADHESIVE PRIMER FOR PLASTIC	550
CONTACT ADHESIVE	80
SPECIAL PURPOSE CONTACT ADHESIVE	250
STRUCTURAL WOOD MEMBER ADHESIVE	140
TOP & TRIM ADHESIVE	250
SUBSTRATE SPECIFIC APPLICATIONS	
METAL TO METAL	30
PLASTIC FOAMS	50
POROUS MATERIAL (EXCEPT WOOD)	50
WOOD	30
FIBERGLASS	80

1. IF AN ADHESIVE IS USED TO BOND DISSIMILAR SUBSTRATES TOGETHER, THE ADHESIVE WITH THE HIGHEST VOC CONTENT SHALL BE ALLOWED.

2. FOR ADDITIONAL INFORMATION REGARDING METHODS TO MEASURE THE VOC CONTENT SPECIFIED IN THIS TABLE, SEE SOUTH COAST AIR QUALITY MANAGEMENT DISTRICT RULE 1168.

TABLE 4.504.2 - SEALANT VOC LIMIT

(Less Water and Less Exempt Compounds in Grams per Liter)

SEALANTS	VOC LIMIT
ARCHITECTURAL	250
MARINE DECK	760
NONMEMBRANE ROOF	300
ROADWAY	250
SINGLE-PLY ROOF MEMBRANE	450
OTHER	420
SEALANT PRIMERS	
ARCHITECTURAL	
NON-POROUS	250
POROUS	775
MODIFIED BITUMINOUS	500
MARINE DECK	760
OTHER	750

TABLE 4.504.3 - VOC CONTENT LIMITS FOR ARCHITECTURAL COATINGS[2,3]

GRAMS OF VOC PER LITER OF COATING, LESS WATER & LESS EXEMPT COMPOUNDS

COATING CATEGORY	VOC LIMIT
FLAT COATINGS	50
NON-FLAT COATINGS	100
NONFLAT-HIGH GLOSS COATINGS	150
SPECIALTY COATINGS	
ALUMINUM ROOF COATINGS	400
BASEMENT SPECIALTY COATINGS	400
BITUMINOUS ROOF COATINGS	50
BITUMINOUS ROOF PRIMERS	350
BOND BREAKERS	350
CONCRETE CURING COMPOUNDS	350
CONCRETE/MASONRY SEALERS	100
DRIVEWAY SEALERS	50
DRY FOG COATINGS	150
FAUX FINISHING COATINGS	350
FIRE RESISTIVE COATINGS	350
FLOOR COATINGS	100
FORM-RELEASE COMPOUNDS	250
GRAPHIC ARTS COATINGS (SIGN PAINTS)	500
HIGH TEMPERATURE COATINGS	420
INDUSTRIAL MAINTENANCE COATINGS	250
LOW SOLIDS COATINGS[1]	120
MAGNESITE CEMENT COATINGS	450
MASTIC TEXTURE COATINGS	100
METALLIC PIGMENTED COATINGS	500
MULTICOLOR COATINGS	250
PRETREATMENT WASH PRIMERS	420
PRIMERS, SEALERS, & UNDERCOATERS	100
REACTIVE PENETRATING SEALERS	350
RECYCLED COATINGS	250
ROOF COATINGS	50
RUST PREVENTATIVE COATINGS	250
SHELLACS	
CLEAR	730
OPAQUE	550
SPECIALTY PRIMERS, SEALERS & UNDERCOATERS	100
STAINS	250
STONE CONSOLIDANTS	450
SWIMMING POOL COATINGS	340
TRAFFIC MARKING COATINGS	100
TUB & TILE REFINISH COATINGS	420
WATERPROOFING MEMBRANES	250
WOOD COATINGS	275
WOOD PRESERVATIVES	350
ZINC-RICH PRIMERS	340

1. GRAMS OF VOC PER LITER OF COATING, INCLUDING WATER & EXEMPT COMPOUNDS

2. THE SPECIFIED LIMITS REMAIN IN EFFECT UNLESS REVISED LIMITS ARE LISTED IN SUBSEQUENT COLUMNS IN THE TABLE.

3. VALUES IN THIS TABLE ARE DERIVED FROM THOSE SPECIFIED BY THE CALIFORNIA AIR RESOURCES BOARD, ARCHITECTURAL COATINGS SUGGESTED CONTROL MEASURE, FEB. 1, 2008. MORE INFORMATION IS AVAILABLE FROM THE AIR RESOURCES BOARD.

TABLE 4.504.5 - FORMALDEHYDE LIMITS[1]

MAXIMUM FORMALDEHYDE EMISSIONS IN PARTS PER MILLION

PRODUCT	CURRENT LIMIT
HARDWOOD PLYWOOD VENEER CORE	0.05
HARDWOOD PLYWOOD COMPOSITE CORE	0.05
PARTICLE BOARD	0.09
MEDIUM DENSITY FIBERBOARD	0.11
THIN MEDIUM DENSITY FIBERBOARD[2]	0.13

1. VALUES IN THIS TABLE ARE DERIVED FROM THOSE SPECIFIED BY THE CALIF. AIR RESOURCES BOARD, AIR TOXICS CONTROL MEASURE FOR COMPOSITE WOOD AS TESTED IN ACCORDANCE WITH ASTM E 1333. FOR ADDITIONAL INFORMATION, SEE CALIF. CODE OF REGULATIONS, TITLE 17, SECTIONS 93120 THROUGH 93120.12.

2. THIN MEDIUM DENSITY FIBERBOARD HAS A MAXIMUM THICKNESS OF 5/16" (8 MM).

DIVISION 4.5 ENVIRONMENTAL QUALITY (continued)

4.504.3 CARPET SYSTEMS. All carpet installed in the building interior shall meet the requirements of the California Department of Public Health, "Standard Method for the Testing and Evaluation of Volatile Organic Chemical Emissions from Indoor Sources Using Environmental Chambers," Version 1.2, January 2017 (Emission testing method for California Specification 01350)

See California Department of Public Health's website for certification programs and testing labs.

https://www.cdph.ca.gov/Programs/CCDPHP/DEODC/EHLB/IAQ/Pages/VOC.aspx.

4.504.3.1 Carpet cushion. All carpet cushion installed in the building interior shall meet the requirements of the California Department of Public Health, "Standard Method for the Testing and Evaluation of Volatile Organic Chemical Emissions from Indoor Sources Using Environmental Chambers," Version 1.2, January 2017 (Emission testing method for California Specification 01350)

See California Department of Public Health's website for certification programs and testing labs.

https://www.cdph.ca.gov/Programs/CCDPHP/DEODC/EHLB/IAQ/Pages/VOC.aspx.

4.504.3.2 Carpet adhesive. All carpet adhesive shall meet the requirements of Table 4.504.1.

4.504.4 RESILIENT FLOORING SYSTEMS. Where resilient flooring is installed , at least 80% of floor area receiving resilient flooring shall meet the requirements of the California Department of Public Health, "Standard Method for the Testing and Evaluation of Volatile Organic Chemical Emissions from Indoor Sources Using Environmental Chambers," Version 1.2, January 2017 (Emission testing method for California Specification 01350)

See California Department of Public Health's website for certification programs and testing labs.

https://www.cdph.ca.gov/Programs/CCDPHP/DEODC/EHLB/IAQ/Pages/VOC.aspx.

4.504.5 COMPOSITE WOOD PRODUCTS. Hardwood plywood, particleboard and medium density fiberboard composite wood products used on the interior or exterior of the buildings shall meet the requirements for formaldehyde as specified in ARB's Air Toxics Control Measure for Composite Wood (17 CCR 93120 et seq.), by or before the dates specified in those sections, as shown in Table 4.504.5

4.504.5.1 Documentation. Verification of compliance with this section shall be provided as requested by the enforcing agency. Documentation shall include at least one of the following:

1. Product certifications and specifications.
2. Chain of custody certifications.
3. Product labeled and invoiced as meeting the Composite Wood Products regulation (see CCR, Title 17, Section 93120, et seq.).
4. Exterior grade products marked as meeting the PS-1 or PS-2 standards of the Engineered Wood Association, the Australian AS/NZS 2269, European 636 3S standards, and Canadian CSA 0121, CSA 0151, CSA 0153 and CSA 0325 standards.
5. Other methods acceptable to the enforcing agency.

4.505 INTERIOR MOISTURE CONTROL

4.505.1 General. Buildings shall meet or exceed the provisions of the *California Building Standards Code*.

4.505.2 CONCRETE SLAB FOUNDATIONS. Concrete slab foundations required to have a vapor retarder by California Building Code, Chapter 19, or concrete slab-on-ground floors required to have a vapor retarder by the California Residential Code, Chapter 5, shall also comply with this section.

4.505.2.1 Capillary break. A capillary break shall be installed in compliance with at least one of the following:

1. A 4-inch (101.6 mm) thick base of 1/2 inch (12.7mm) or larger clean aggregate shall be provided with a vapor barrier in direct contact with concrete and a concrete mix design, which will address bleeding, shrinkage, and curling, shall be used. For additional information, see American Concrete Institute, ACI 302.2R-06.
2. Other equivalent methods approved by the enforcing agency.
3. A slab design specified by a licensed design professional.

4.505.3 MOISTURE CONTENT OF BUILDING MATERIALS. Building materials with visible signs of water damage shall not be installed. Wall and floor framing shall not be enclosed when the framing members exceed 19 percent moisture content. Moisture content shall be verified in compliance with the following:

1. Moisture content shall be determined with either a probe-type or contact-type moisture meter.Equivalent moisture verification methods may be approved by the enforcing agency and shall satisfy requirements found in Section 101.8 of this code.
2. Moisture readings shall be taken at a point 2 feet (610 mm) to 4 feet (1219 mm) from the grade stamped end of each piece verified.
3. At least three random moisture readings shall be performed on wall and floor framing with documentation acceptable to the enforcing agency provided at the time of approval to enclose the wall and floor framing.

Insulation products which are visibly wet or have a high moisture content shall be replaced or allowed to dry prior to enclosure in wall or floor cavities. Wet-applied insulation products shall follow the manufacturers' drying recommendations prior to enclosure.

4.506 INDOOR AIR QUALITY AND EXHAUST

4.506.1 Bathroom exhaust fans. Each bathroom shall be mechanically ventilated and shall comply with the following:

M-0.1 See note #8 & #9 under "Calgreen Notes"

1. Fans shall be ENERGY STAR compliant and be ducted to terminate outside the building.
2. Unless functioning as a component of a whole house ventilation system, fans must be controlled by a humidity control.
   a. Humidity controls shall be capable of adjustment between a relative humidity range less than or equal to 50% to a maximum of 80%. A humidity control may utilize manual or automatic means of adjustment.
   b. A humidity control may be a separate component to the exhaust fan and is not required to be integral (i.e., built-in)

Notes:

1. For the purposes of this section, a bathroom is a room which contains a bathtub, shower or tub/shower combination.
2. Lighting integral to bathroom exhaust fans shall comply with the *California Energy Code*.

4.507 ENVIRONMENTAL COMFORT

4.507.2 HEATING AND AIR-CONDITIONING SYSTEM DESIGN. Heating and air conditioning systems shall be sized, designed and have their equipment selected using the following methods:

M-0.1 See note #4 under "Calgreen Notes"

1. The heat loss and heat gain is established according to ANSI/ACCA 2 Manual J - 2011 (Residential Load Calculation), ASHRAE handbooks or other equivalent design software or methods.
2. Duct systems are sized according to ANSI/ACCA 1 Manual D - 2014 (Residential Duct Systems), ASHRAE handbooks or other equivalent design software or methods.
3. Select heating and cooling equipment according to ANSI/ACCA 3 Manual S - 2014 (Residential Equipment Selection), or other equivalent design software or methods.

Exception: Use of alternate design temperatures necessary to ensure the system functions are acceptable.

CHAPTER 7
INSTALLER & SPECIAL INSPECTOR QUALIFICATIONS

702 QUALIFICATIONS

702.1 INSTALLER TRAINING. HVAC system installers shall be trained and certified in the proper installation of HVAC systems including ducts and equipment by a nationally or regionally recognized training or certification program. Uncertified persons may perform HVAC installations when under the direct supervision and responsibility of a person trained and certified to install HVAC systems or contractor licensed to install HVAC systems. Examples of acceptable HVAC training and certification programs include but are not limited to the following:

M-0.1 See note #10 under "Calgreen Notes"

1. State certified apprenticeship programs.
2. Public utility training programs.
3. Training programs sponsored by trade, labor or statewide energy consulting or verification organizations.
4. Programs sponsored by manufacturing organizations.
5. Other programs acceptable to the enforcing agency.

702.2 SPECIAL INSPECTION [HCD]. When required by the enforcing agency, the owner or the responsible entity acting as the owner's agent shall employ one or more special inspectors to provide inspection or other duties necessary to substantiate compliance with this code. Special inspectors shall demonstrate competence to the satisfaction of the enforcing agency for the particular type of inspection or task to be performed. In addition to other certifications or qualifications acceptable to the enforcing agency, the following certifications or education may be considered by the enforcing agency when evaluating the qualifications of a special inspector:

M-0.1 See note #12 under "Calgreen Notes"

1. Certification by a national or regional green building program or standard publisher.
2. Certification by a statewide energy consulting or verification organization, such as HERS raters, building performance contractors, and home energy auditors.
3. Successful completion of a third party apprentice training program in the appropriate trade.
4. Other programs acceptable to the enforcing agency.

Notes:

1. Special inspectors shall be independent entities with no financial interest in the materials or the project they are inspecting for compliance with this code.
2. HERS raters are special inspectors certified by the California Energy Commission (CEC) to rate homes in California according to the Home Energy Rating System (HERS).

[BSC] When required by the enforcing agency, the owner or the responsible entity acting as the owner's agent shall employ one or more special inspectors to provide inspection or other duties necessary to substantiate compliance with this code. Special inspectors shall demonstrate competence to the satisfaction of the enforcing agency for the particular type of inspection or task to be performed. In addition, the special inspector shall have a certification from a recognized state, national or international association, as determined by the local agency. The area of certification shall be closely related to the primary job function, as determined by the local agency.

Note: Special inspectors shall be independent entities with no financial interest in the materials or the project they are inspecting for compliance with this code.

703 VERIFICATIONS

703.1 DOCUMENTATION. Documentation used to show compliance with this code shall include but is not limited to, construction documents, plans, specifications, builder or installer certification, inspection reports, or other methods acceptable to the enforcing agency which demonstrate substantial conformance. When specific documentation or special inspection is necessary to verify compliance, that method of compliance will be specified in the appropriate section or identified applicable checklist.

M-0.1 See note #13 under "Calgreen Notes"

LICENSED ARCHITECT ZHISHUANG CHEN NO. C-28158 REN. 5/31/25 STATE OF CALIFORNIA

CG-MM2

DISCLAIMER: *THIS DOCUMENT IS PROVIDED AND INTENDED TO BE USED AS A MEANS TO INDICATE AREAS OF COMPLIANCE WITH THE CALIFORNIA GREEN BUILDING STANDARDS (CALGREEN) CODE. DUE TO THE VARIABLES BETWEEN BUILDING DEPARTMENT JURISDICTIONS, THIS CHECKLIST IS TO BE USED ON AN INDIVIDUAL PROJECT BASIS AND MAY BE MODIFIED BY THE END USER TO MEET THOSE INDIVIDUAL NEEDS. THE END USER ASSUMES ALL RESPONSIBILITY ASSOCIATED WITH THE USE OF THIS DOCUMENT, INCLUDING VERIFICATION WITH THE FULL CODE.*

2019 CALIFORNIA GREEN BUILDING STANDARDS CODE
RESIDENTIAL MANDATORY MEASURES, SHEET 1 (July 2021, Includes July 2021 Supplement)

Y = YES
N/A = NOT APPLICABLE
RESPON. PARTY = RESPONSIBLE PARTY (ie: ARCHITECT, ENGINEER, OWNER, CONTRACTOR, INSPECTOR ETC.)

CHAPTER 3
GREEN BUILDING
SECTION 301 GENERAL

301.1 SCOPE. Buildings shall be designed to include the green building measures specified as mandatory in the application checklists contained in this code. Voluntary green building measures are also included in the application checklists and may be included in the design and construction of structures covered by this code, but are not required unless adopted by a city, county, or city and county as specified in Section 101.7.

301.1.1 Additions and alterations. [HCD] The mandatory provisions of Chapter 4 shall be applied to additions or alterations of existing residential buildings where the addition or alteration increases the building's conditioned area, volume, or size. The requirements shall apply only to and/or within the specific area of the addition or alteration.

Note: On and after January 1, 2014, residential buildings undergoing permitted alterations, additions, or improvements shall replace noncompliant plumbing fixtures with water-conserving plumbing fixtures. Plumbing fixture replacement is required prior to issuance of a certificate of final completion, certificate of occupancy or final permit approval by the local building department. See Civil Code Section 1101.1, et seq., for the definition of a noncompliant plumbing fixture, types of residential buildings affected and other important enactment dates.

301.2 LOW-RISE AND HIGH-RISE RESIDENTIAL BUILDINGS. [HCD] The provisions of individual sections of CALGreen may apply to either low-rise residential buildings high-rise residential buildings, or both. Individual sections will be designated by banners to indicate where the section applies specifically to low-rise only (LR) or high-rise only (HR). When the section applies to both low-rise and high-rise buildings, no banner will be used.

SECTION 302 MIXED OCCUPANCY BUILDINGS

302.1 MIXED OCCUPANCY BUILDINGS. In mixed occupancy buildings, each portion of a building shall comply with the specific green building measures applicable to each specific occupancy.

Exceptions:
1. [HCD] Accessory structures and accessory occupancies serving residential buildings shall comply with Chapter 4 and Appendix A4, as applicable.
2. [HCD] For purposes of CALGreen, live/work units, complying with Section 419 of the *California Building Code*, shall not be considered mixed occupancies. Live/Work units shall comply with Chapter 4 and Appendix A4, as applicable.

DIVISION 4.1 PLANNING AND DESIGN

ABBREVIATION DEFINITIONS:

HCD	Department of Housing and Community Development
BSC	California Building Standards Commission
DSA-SS	Division of the State Architect, Structural Safety
OSHPD	Office of Statewide Health Planning and Development
LR	Low Rise
HR	High Rise
AA	Additions and Alterations
N	New

CHAPTER 4
RESIDENTIAL MANDATORY MEASURES

SECTION 4.102 DEFINITIONS

4.102.1 DEFINITIONS
The following terms are defined in Chapter 2 *(and are included here for reference)*

FRENCH DRAIN. A trench, hole or other depressed area loosely filled with rock, gravel, fragments of brick or similar pervious material used to collect or channel drainage or runoff water.

WATTLES. Wattles are used to reduce sediment in runoff. Wattles are often constructed of natural plant materials such as hay, straw or similar material shaped in the form of tubes and placed on a downflow slope. Wattles are also used for perimeter and inlet controls.

4.106 SITE DEVELOPMENT

4.106.1 GENERAL. Preservation and use of available natural resources shall be accomplished through evaluation and careful planning to minimize negative effects on the site and adjacent areas. Preservation of slopes, management of storm water drainage and erosion controls shall comply with this section.

4.106.2 STORM WATER DRAINAGE AND RETENTION DURING CONSTRUCTION. Projects which disturb less than one acre of soil and are not part of a larger common plan of development which in total disturbs one acre or more, shall manage storm water drainage during construction. In order to manage storm water drainage during construction, one or more of the following measures shall be implemented to prevent flooding of adjacent property, prevent erosion and retain soil runoff on the site.

1. Retention basins of sufficient size shall be utilized to retain storm water on the site.
2. Where storm water is conveyed to a public drainage system, collection point, gutter or similar disposal method, water shall be filtered by use of a barrier system, wattle or other method approved by the enforcing agency.
3. Compliance with a lawfully enacted storm water management ordinance.

Note: Refer to the State Water Resources Control Board for projects which disturb one acre or more of soil, or are part of a larger common plan of development which in total disturbs one acre or more of soil.

(Website: https://www.waterboards.ca.gov/water_issues/programs/stormwater/construction.html)

4.106.3 GRADING AND PAVING. Construction plans shall indicate how the site grading or drainage system will manage all surface water flows to keep water from entering buildings. Examples of methods to manage surface water include, but are not limited to, the following:

1. Swales
2. Water collection and disposal systems
3. French drains
4. Water retention gardens
5. Other water measures which keep surface water away from buildings and aid in groundwater recharge.

Exception: Additions and alterations not altering the drainage path.

4.106.4 Electric vehicle (EV) charging for new construction. New construction shall comply with Sections 4.106.4.1, 4.106.4.2, or 4.106.4.3 to facilitate future installation and use of EV chargers. Electric vehicle supply equipment (EVSE) shall be installed in accordance with the *California Electrical Code,* Article 625.

Exceptions:
1. On a case-by-case basis, where the local enforcing agency has determined EV charging and infrastructure are not feasible based upon one or more of the following conditions:
   1.1 Where there is no commercial power supply.
   1.2 Where there is evidence substantiating that meeting the requirements will alter the local utility infrastructure design requirements on the utility side of the meter so as to increase the utility side cost to the homeowner or the developer by more than $400.00 per dwelling unit.
2. Accessory Dwelling Units (ADU) and Junior Accessory Dwelling Units (JADU) without additional parking facilities.

4.106.4.1 New one- and two-family dwellings and townhouses with attached private garages. For each dwelling unit, install a listed raceway to accommodate a dedicated 208/240-volt branch circuit. The raceway shall not be less than trade size 1 (nominal 1-inch inside diameter). The raceway shall originate at the main service or subpanel and shall terminate into a listed cabinet, box or other enclosure in close proximity to the proposed location of an EV charger. Raceways are required to be continuous at enclosed, inaccessible or concealed areas and spaces. The service panel and/or subpanel shall provide capacity to install a 40-ampere 208/240-volt minimum dedicated branch circuit and space(s) reserved to permit installation of a branch circuit overcurrent protective device.

Exemption: A raceway is not required if a minimum 40-ampere 208/240-volt dedicated EV branch circuit is installed in close proximity to the proposed location of an EV charger at the time of original construction in accordance with the *California Electrical Code.*

4.106.4.1.1 Identification. The service panel or subpanel circuit directory shall identify the overcurrent protective device space(s) reserved for future EV charging as "EV CAPABLE". The raceway termination location shall be permanently and visibly marked as "EV CAPABLE".

4.106.4.2 New multifamily dwellings. If residential parking is available, ten (10) percent of the total number of parking spaces on a building site, provided for all types of parking facilities, shall be electric vehicle charging spaces (EV spaces) capable of supporting future EVSE. Calculations for the required number of EV spaces shall be rounded up to the nearest whole number.

Notes:
1. Construction documents are intended to demonstrate the project's capability and capacity for facilitating future EV charging.
2. There is no requirement for EV spaces to be constructed or available until EV chargers are installed for use.
3. A parking space served by electric vehicle supply equipment or designated as a future EV charging space shall count as at least one standard automobile parking space for the purpose of complying with any applicable minimum parking space requirements established by a local jurisdiction. See *Vehicle Code* Section 22511.2 for further details.

4.106.4.2.1 Electric vehicle charging space (EV space) locations. Construction documents shall indicate the location of proposed EV spaces. Where common use parking is provided at least one EV space shall be located in the common use parking area and shall be available for use by all residents.

4.106.4.2.1.1 Electric Vehicle Charging Stations (EVCS) When EV chargers are installed, EV spaces required by Section 4.106.2.2, Item 3, shall comply with at least one of the following options:

1. The EV space shall be located adjacent to an accessible parking space meeting the requirements of the *California Building Code,* Chapter 11A, to allow use of the EV charger from the accessible parking space.
2. The EV space shall be located on an accessible route, as defined in the *California Building Code,* Chapter 2, to the building.

Exception: Electric vehicle charging stations designed and constructed in compliance with the *California Building Code*, Chapter 11B, are not required to comply with Section 4.106.4.2.1.1 and Section 4.106.4.2.2, Item 3.

Note: Electric Vehicle charging stations serving public housing are required to comply with the *California Building Code*, Chapter 11B.

4.106.4.2.2 Electric vehicle charging space (EV space) dimensions. The EV space shall be designed to comply with the following:

1. The minimum length of each EV space shall be 18 feet (5486 mm).
2. The minimum width of each EV space shall be 9 feet (2743 mm).
3. One in every 25 EV spaces, but not less than one EV space, shall have an 8-foot (2438 mm) wide minimum aisle. A 5-foot (1524 mm) wide minimum aisle shall be permitted provided the minimum width of the EV space is 12 feet (3658 mm).
   a. Surface slope for this EV space and the aisle shall not exceed 1 unit vertical in 48 units horizontal (2.083 percent slope) in any direction.

4.106.4.2.3 Single EV space required. Install a listed raceway capable of accommodating a 208/240-volt dedicated branch circuit. The raceway shall not be less than trade size 1 (nominal 1-inch inside diameter). The raceway shall originate at the main service or subpanel and shall terminate into a listed cabinet, box or enclosure in close proximity to the proposed location of the EV space. Construction documents shall identify the raceway termination point. The service panel and/or subpanel shall provide capacity to install a 40-ampere minimum dedicated branch circuit and space(s) reserved to permit installation of a branch circuit overcurrent protective device.

Exemption: A raceway is not required if a minimum 40-ampere 208/240-volt dedicated EV branch circuit is installed in close proximity to the proposed location of an EV charger, at the time of original construction in accordance with the *California Electrical Code.*

4.106.4.2.4 Multiple EV spaces required. Construction documents shall indicate the raceway termination point and proposed location of future EV spaces and EV chargers. Construction documents shall also provide information on amperage of future EVSE, raceway method(s), wiring schematics and electrical load calculations to verify that the electrical panel service capacity and electrical system, including any on-site distribution transformer(s), have sufficient capacity to simultaneously charge all EVs at all required EV spaces at the full rated amperage of the EVSE. Plan design shall be based upon a 40-ampere minimum branch circuit. Required raceways and related components that are planned to be installed underground, enclosed, inaccessible or in concealed areas and spaces shall be installed at the time of original construction.

Exemption: A raceway is not required if a minimum 40-ampere 208/240-volt dedicated EV branch circuit is installed in close proximity to the proposed location of an EV charger, at the time of original construction in accordance with the *California Electrical Code.*

4.106.4.2.5 Identification. The service panel or subpanel circuit directory shall identify the overcurrent protective device space(s) reserved for future EV charging purposes as "EV CAPABLE" in accordance with the *California Electrical Code.*

4.106.4.3 New hotels and motels. All newly constructed hotels and motels shall provide EV spaces capable of supporting future installation of EVSE. The construction documents shall identify the location of the EV spaces.

Notes:

1. Construction documents are intended to demonstrate the project's capability and capacity or facilitating future EV charging.
2. There is no requirement for EV spaces to be constructed or available until EV chargers are installed for use.
3. A parking space served by electrical vehicle supple equipment or designed as a future EV charging space shall count as at least one standard automobile parking space for the purpose of complying with any applicable minimum parking space requirements established by a local jurisdiction. See *Vehicle Code* Section 22511.2 for further details.

4.106.4.3.1 Number of required EV spaces. The number of required EV spaces shall be based on the total number of parking spaces provided for all types of parking facilities in accordance with Table 4.106.4.3.1. Calculations for the required number of EV spaces shall be rounded up to the nearest whole number.

TABLE 4.106.4.3.1

TOTAL NUMBER OF PARKING SPACES	NUMBER OF REQUIRED EV SPACES
0-9	0
10-25	1
26-50	2
51-75	4
76-100	5
101-150	7
151-200	10
201 and over	6 percent of total

4.106.4.3.2 Electric vehicle charging space (EV space) dimensions. The EV spaces shall be designed to comply with the following:

1. The minimum length of each EV space shall be 18 feet (5486mm).
2. The minimum width of each EV space shall be 9 feet (2743mm)

4.106.4.3.3 Single EV space required. When a single EV space is required, the EV space shall be designed in accordance with Section 4.106.4.2.3.

4.106.4.3.4 Multiple EV spaces required. When multiple EV spaces are required, the EV spaces shall be designed in accordance with Section 4.106.4.2.4.

4.106.4.3.5 Identification. The service panels or sub-panels shall be identified in accordance with Section 4.106.4.2.5.

4.106.4.3.6 Accessible EV spaces. In addition to the requirements in Section 4.106.4.3, EV spaces for hotels/motels and all EVSE, when installed, shall comply with the accessibility provisions for the EV charging stations in the *California Building Code,* Chapter 11B.

DIVISION 4.2 ENERGY EFFICIENCY

4.201 GENERAL
4.201.1 SCOPE. For the purposes of mandatory energy efficiency standards in this code, the California Energy Commission will continue to adopt mandatory standards.

DIVISION 4.3 WATER EFFICIENCY AND CONSERVATION

4.303 INDOOR WATER USE
4.303.1 WATER CONSERVING PLUMBING FIXTURES AND FITTINGS. Plumbing fixtures (water closets and urinals) and fittings (faucets and showerheads) shall comply with the sections 4.303.1.1, 4.303.1.2, 4.303.1.3, and 4.303.4.4.

Note: All noncompliant plumbing fixtures in any residential real property shall be replaced with water-conserving plumbing fixtures. Plumbing fixture replacement is required prior to issuance of a certificate of final completion, certificate of occupancy, or final permit approval by the local building department. See Civil Code Section 1101.1, et seq., for the definition of a noncompliant plumbing fixture, types of residential buildings affected and other important enactment dates.

4.303.1.1 Water Closets. The effective flush volume of all water closets shall not exceed 1.28 gallons per flush. Tank-type water closets shall be certified to the performance criteria of the U.S. EPA WaterSense Specification for Tank-type Toilets.

Note: The effective flush volume of dual flush toilets is defined as the composite, average flush volume of two reduced flushes and one full flush.

4.303.1.2 Urinals. The effective flush volume of wall mounted urinals shall not exceed 0.125 gallons per flush. The effective flush volume of all other urinals shall not exceed 0.5 gallons per flush.

4.303.1.3 Showerheads.

4.303.1.3.1 Single Showerhead. Showerheads shall have a maximum flow rate of not more than 1.8 gallons per minute at 80 psi. Showerheads shall be certified to the performance criteria of the U.S. EPA WaterSense Specification for Showerheads.

4.303.1.3.2 Multiple showerheads serving one shower. When a shower is served by more than one showerhead, the combined flow rate of all the showerheads and/or other shower outlets controlled by a single valve shall not exceed 1.8 gallons per minute at 80 psi, or the shower shall be designed to only allow one shower outlet to be in operation at a time.

Note: A hand-held shower shall be considered a showerhead.

4.303.1.4 Faucets.

4.303.1.4.1 Residential Lavatory Faucets. The maximum flow rate of residential lavatory faucets shall not exceed 1.2 gallons per minute at 60 psi. The minimum flow rate of residential lavatory faucets shall not be less than 0.8 gallons per minute at 20 psi.

4.303.1.4.2 Lavatory Faucets in Common and Public Use Areas. The maximum flow rate of lavatory faucets installed in common and public use areas (outside of dwellings or sleeping units) in residential buildings shall not exceed 0.5 gallons per minute at 60 psi.

4.303.1.4.3 Metering Faucets. Metering faucets when installed in residential buildings shall not deliver more than 0.2 gallons per cycle.

4.303.1.4.4 Kitchen Faucets. The maximum flow rate of kitchen faucets shall not exceed 1.8 gallons per minute at 60 psi. Kitchen faucets may temporarily increase the flow above the maximum rate, but not to exceed 2.2 gallons per minute at 60 psi, and must default to a maximum flow rate of 1.8 gallons per minute at 60 psi.

Note: Where complying faucets are unavailable, aerators or other means may be used to achieve reduction.

4.303.1.4.5 Pre-rinse spray valves.
When installed, shall meet the requirements in the *California Code of Regulations*, Title 20 (Appliance Efficiency Regulations), Sections 1605.1 (h)(4) Table H-2, Section 1605.3 (h)(4)(A), and Section 1607 (d)(7) and shall be equipped with an integral automatic shutoff.

FOR REFERENCE ONLY: The following table and code section have been reprinted from the *California Code of Regulations*, Title 20 (Appliance Efficiency Regulations),Section 1605.1 (h)(4) and Section 1605.3 (h)(4)(A).

TABLE H-2

STANDARDS FOR COMMERCIAL PRE-RINSE SPRAY VALUES MANUFACTURED ON OR AFTER JANUARY 28, 2019

PRODUCT CLASS [spray force in ounce force (ozf)]	MAXIMUM FLOW RATE (gpm)
Product Class 1 (≤ 5.0 ozf)	1.00
Product Class 2 (> 5.0 ozf and ≤ 8.0 ozf)	1.20
Product Class 3 (> 8.0 ozf)	1.28

Title 20 Section 1605.3 (h)(4)(A): Commercial prerinse spray values manufactured on or after January 1, 2006, shall have a minimum spray force of not less than 4.0 ounces-force (ozf)[113 grams-force(gf)]

4.303.2 Submeters for multifamily buildings and dwelling units in mixed-used residential/commercial buildings.
Submeters shall be installed to measure water usage of individual rental dwelling units in accordance with the *California Plumbing Code*.

4.303.3 Standards for plumbing fixtures and fittings. Plumbing fixtures and fittings shall be installed in accordance with the *California Plumbing Code*, and shall meet the applicable standards referenced in Table 1701.1 of the *California Plumbing Code*.

NOTE:
THIS TABLE COMPILES THE DATA IN SECTION 4.303.1, AND IS INCLUDED AS A CONVENIENCE FOR THE USER.

TABLE - MAXIMUM FIXTURE WATER USE

FIXTURE TYPE	FLOW RATE
SHOWER HEADS (RESIDENTIAL)	1.8 GMP @ 80 PSI
LAVATORY FAUCETS (RESIDENTIAL)	MAX. 1.2 GPM @ 60 PSI MIN. 0.8 GPM @ 20 PSI
LAVATORY FAUCETS IN COMMON & PUBLIC USE AREAS	0.5 GPM @ 60 PSI
KITCHEN FAUCETS	1.8 GPM @ 60 PSI
METERING FAUCETS	0.2 GAL/CYCLE
WATER CLOSET	1.28 GAL/FLUSH
URINALS	0.125 GAL/FLUSH

4.304 OUTDOOR WATER USE
4.304.1 OUTDOOR POTABLE WATER USE IN LANDSCAPE AREAS. Residential developments shall comply with a local water efficient landscape ordinance or the current California Department of Water Resources' Model Water Efficient Landscape Ordinance (MWELO), whichever is more stringent.

NOTES:

1. The Model Water Efficient Landscape Ordinance (MWELO) is located in the *California Code Regulations,* Title 23, Chapter 2.7, Division 2. MWELO and supporting documents, including water budget calculator, are available at: https://www.water.ca.gov/

DIVISION 4.4 MATERIAL CONSERVATION AND RESOURCE EFFICIENCY

4.406 ENHANCED DURABILITY AND REDUCED MAINTENANCE
4.406.1 RODENT PROOFING. Annular spaces around pipes, electric cables, conduits or other openings in sole/bottom plates at exterior walls shall be protected against the passage of rodents by closing such openings with cement mortar, concrete masonry or a similar method acceptable to the enforcing agency.

4.408 CONSTRUCTION WASTE REDUCTION, DISPOSAL AND RECYCLING
4.408.1 CONSTRUCTION WASTE MANAGEMENT. Recycle and/or salvage for reuse a minimum of 65 percent of the non-hazardous construction and demolition waste in accordance with either Section 4.408.2, 4.408.3 or 4.408.4, or meet a more stringent local construction and demolition waste management ordinance.

Exceptions:

1. Excavated soil and land-clearing debris.
2. Alternate waste reduction methods developed by working with local agencies if diversion or recycle facilities capable of compliance with this item do not exist or are not located reasonably close to the jobsite.
3. The enforcing agency may make exceptions to the requirements of this section when isolated jobsites are located in areas beyond the haul boundaries of the diversion facility.

4.408.2 CONSTRUCTION WASTE MANAGEMENT PLAN. Submit a construction waste management plan in conformance with Items 1 through 5. The construction waste management plan shall be updated as necessary and shall be available during construction for examination by the enforcing agency.

1. Identify the construction and demolition waste materials to be diverted from disposal by recycling, reuse on the project or salvage for future use or sale.
2. Specify if construction and demolition waste materials will be sorted on-site (source separated) or bulk mixed (single stream).
3. Identify diversion facilities where the construction and demolition waste material collected will be taken.
4. Identify construction methods employed to reduce the amount of construction and demolition waste generated.
5. Specify that the amount of construction and demolition waste materials diverted shall be calculated by weight or volume, but not by both.

4.408.3 WASTE MANAGEMENT COMPANY. Utilize a waste management company, approved by the enforcing agency, which can provide verifiable documentation that the percentage of construction and demolition waste material diverted from the landfill complies with Section 4.408.1.

Note: The owner or contractor may make the determination if the construction and demolition waste materials will be diverted by a waste management company.

4.408.4 WASTE STREAM REDUCTION ALTERNATIVE [LR]. Projects that generate a total combined weight of construction and demolition waste disposed of in landfills, which do not exceed 3.4 lbs./sq.ft. of the building area shall meet the minimum 65% construction waste reduction requirement in Section 4.408.1

4.408.4.1 WASTE STREAM REDUCTION ALTERNATIVE. Projects that generate a total combined weight of construction and demolition waste disposed of in landfills, which do not exceed 2 pounds per square foot of the building area, shall meet the minimum 65% construction waste reduction requirement in Section 4.408.1

4.408.5 DOCUMENTATION. Documentation shall be provided to the enforcing agency which demonstrates compliance with Section 4.408.2, items 1 through 5, Section 4.408.3 or Section 4.408.4..

Notes:

1. Sample forms found in "A Guide to the California Green Building Standards Code (Residential)" located at www.hcd.ca.gov/CALGreen.html may be used to assist in documenting compliance with this section.
2. Mixed construction and demolition debris (C & D) processors can be located at the California Department of Resources Recycling and Recovery (CalRecycle).

4.410 BUILDING MAINTENANCE AND OPERATION
4.410.1 OPERATION AND MAINTENANCE MANUAL. At the time of final inspection, a manual, compact disc, web-based reference or other media acceptable to the enforcing agency which includes all of the following shall be placed in the building:

1. Directions to the owner or occupant that the manual shall remain with the building throughout the life cycle of the structure.
2. Operation and maintenance instructions for the following:
   a. Equipment and appliances, including water-saving devices and systems, HVAC systems, photovoltaic systems, electric vehicle chargers, water-heating systems and other major appliances and equipment.
   b. Roof and yard drainage, including gutters and downspouts.
   c. Space conditioning systems, including condensers and air filters.
   d. Landscape irrigation systems.
   e. Water reuse systems.
3. Information from local utility, water and waste recovery providers on methods to further reduce resource consumption, including recycle programs and locations.
4. Public transportation and/or carpool options available in the area.
5. Educational material on the positive impacts of an interior relative humidity between 30-60 percent and what methods an occupant may use to maintain the relative humidity level in that range.
6. Information about water-conserving landscape and irrigation design and controllers which conserve water.
7. Instructions for maintaining gutters and downspouts and the importance of diverting water at least 5 feet away from the foundation.
8. Information on required routine maintenance measures, including, but not limited to, caulking, painting, grading around the building, etc.
9. Information about state solar energy and incentive programs available.
10. A copy of all special inspections verifications required by the enforcing agency or this code.
11. Information from CAL Fire on maintenance of defensible space around residential structures.

4.410.2 RECYCLING BY OCCUPANTS. Where 5 or more multifamily dwelling units are constructed on a building site, provide readily accessible area(s) that serves all buildings on the site and are identified for the depositing, storage and collection of non-hazardous materials for recycling, including (at a minimum) paper, corrugated cardboard, glass, plastics, organic waster, and metals, or meet a lawfully enacted local recycling ordinance, if more restrictive.

Exception: Rural jurisdictions that meet and apply for the exemption in Public Resources Code Section 42649.82 (a)(2)(A) et seq. are note required to comply with the organic waste portion of this section.

DIVISION 4.5 ENVIRONMENTAL QUALITY

SECTION 4.501 GENERAL

4.501.1 Scope
The provisions of this chapter shall outline means of reducing the quality of air contaminants that are odorous, irritating and/or harmful to the comfort and well being of a building's installers, occupants and neighbors.

SECTION 4.502 DEFINITIONS

5.102.1 DEFINITIONS
The following terms are defined in Chapter 2 *(and are included here for reference)*

AGRIFIBER PRODUCTS. Agrifiber products include wheatboard, strawboard, panel substrates and door cores, not including furniture, fixtures and equipment (FF&E) not considered base building elements.

COMPOSITE WOOD PRODUCTS. Composite wood products include hardwood plywood, particleboard and medium density fiberboard. "Composite wood products" does not include hardboard, structural plywood, structural panels, structural composite lumber, oriented strand board, glued laminated timber, prefabricated wood I-joists or finger-jointed lumber, all as specified in California Code of regulations (CCR), title 17, Section 93120.1.

DIRECT-VENT APPLIANCE. A fuel-burning appliance with a sealed combustion system that draws all air for combustion from the outside atmosphere and discharges all flue gases to the outside atmosphere.

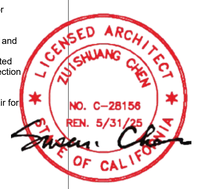

CG-MM1

DISCLAIMER: *THIS DOCUMENT IS PROVIDED AND INTENDED TO BE USED AS A MEANS TO INDICATE AREAS OF COMPLIANCE WITH THE CALIFORNIA GREEN BUILDING STANDARDS (CALGREEN) CODE. DUE TO THE VARIABLES BETWEEN BUILDING DEPARTMENT JURISDICTIONS, THIS CHECKLIST IS TO BE USED ON AN INDIVIDUAL PROJECT BASIS AND MAY BE MODIFIED BY THE END USER TO MEET THOSE INDIVIDUAL NEEDS. THE END USER ASSUMES ALL RESPONSIBILITY ASSOCIATED WITH THE USE OF THIS DOCUMENT, INCLUDING VERIFICATION WITH THE FULL CODE.*

2019 CALIFORNIA GREEN BUILDING STANDARDS CODE

RESIDENTIAL MANDATORY MEASURES, SHEET 1 (July 2021, Includes July 2021 Supplement)

Y = YES
N/A = NOT APPLICABLE
RESPON. PARTY = RESPONSIBLE PARTY (ie: ARCHITECT, ENGINEER, OWNER, CONTRACTOR, INSPECTOR ETC.)

MAXIMUM INCREMENTAL REACTIVITY (MIR). The maximum change in weight of ozone formed by adding a compound to the "Base Reactive Organic Gas (ROG) Mixture" per weight of compound added, expressed to hundredths of a gram (g O^3/g ROC).
Note: MIR values for individual compounds and hydrocarbon solvents are specified in CCR, Title 17, Sections 94700 and 94701.

MOISTURE CONTENT. The weight of the water in wood expressed in percentage of the weight of the oven-dry wood.

PRODUCT-WEIGHTED MIR (PWMIR). The sum of all weighted-MIR for all ingredients in a product subject to this article. The PWMIR is the total product reactivity expressed to hundredths of a gram of ozone formed per gram of product (excluding container and packaging).
Note: PWMIR is calculated according to equations found in CCR, Title 17, Section 94521 (a).

REACTIVE ORGANIC COMPOUND (ROC). Any compound that has the potential, once emitted, to contribute to ozone formation in the troposphere.

VOC. A volatile organic compound (VOC) broadly defined as a chemical compound based on carbon chains or rings with vapor pressures greater than 0.1 millimeters of mercury at room temperature. These compounds typically contain hydrogen and may contain oxygen, nitrogen and other elements. See CCR Title 17, Section 94508(a).

4.503 FIREPLACES

4.503.1 GENERAL. Any installed gas fireplace shall be a direct-vent sealed-combustion type. Any installed woodstove or pellet stove shall comply with U.S. EPA New Source Performance Standards (NSPS) emission limits as applicable, and shall have a permanent label indicating they are certified to meet the emission limits. Woodstoves, pellet stoves and fireplaces shall also comply with applicable local ordinances.

M-0.1 See note #11 under "Calgreen Notes"

4.504 POLLUTANT CONTROL

4.504.1 COVERING OF DUCT OPENINGS & PROTECTION OF MECHANICAL EQUIPMENT DURING CONSTRUCTION. At the time of rough installation, during storage on the construction site and until final startup of the heating, cooling and ventilating equipment, all duct and other related air distribution component openings shall be covered with tape, plastic, sheet metal or other methods acceptable to the enforcing agency to reduce the amount of water, dust or debris which may enter the system.

M-0.1 See note #3 under "Calgreen Notes"

4.504.2 FINISH MATERIAL POLLUTANT CONTROL. Finish materials shall comply with this section.

4.504.2.1 Adhesives, Sealants and Caulks. Adhesives, sealant and caulks used on the project shall meet the requirements of the following standards unless more stringent local or regional air pollution or air quality management district rules apply:

M-0.1 See note #7 under "Calgreen Notes"

1. Adhesives, adhesive bonding primers, adhesive primers, sealants, sealant primers and caulks shall comply with local or regional air pollution control or air quality management district rules where applicable or SCAQMD Rule 1168 VOC limits, as shown in Table 4.504.1 or 4.504.2, as applicable. Such products also shall comply with the Rule 1168 prohibition on the use of certain toxic compounds (chloroform, ethylene dichloride, methylene chloride, perchloroethylene and trichloroethylene), except for aerosol products, as specified in Subsection 2 below.

2. Aerosol adhesives, and smaller unit sizes of adhesives, and sealant or caulking compounds (in units of product, less packaging, which do not weigh more than 1 pound and do not consist of more than 16 fluid ounces) shall comply with statewide VOC standards and other requirements, including prohibitions on use of certain toxic compounds, of *California Code of Regulations*, Title 17, commencing with section 94507.

4.504.2.2 Paints and Coatings. Architectural paints and coatings shall comply with VOC limits in Table 1 of the ARB Architectural Suggested Control Measure, as shown in Table 4.504.3, unless more stringent local limits apply. The VOC content limit for coatings that do not meet the definitions for the specialty coatings categories listed in Table 4.504.3 shall be determined by classifying the coating as a Flat, Nonflat or Nonflat-High Gloss coating, based on its gloss, as defined in subsections 4.21, 4.36, and 4.37 of the 2007 California Air Resources Board, Suggested Control Measure, and the corresponding Flat, Nonflat or Nonflat-High Gloss VOC limit in Table 4.504.3 shall apply.

4.504.2.3 Aerosol Paints and Coatings. Aerosol paints and coatings shall meet the Product-weighted MIR Limits for ROC in Section 94522(a)(2) and other requirements, including prohibitions on use of certain toxic compounds and ozone depleting substances, in Sections 94522(e)(1) and (f)(1) of *California Code of Regulations*, Title 17, commencing with Section 94520; and in areas under the jurisdiction of the Bay Area Air Quality Management District additionally comply with the percent VOC by weight of product limits of Regulation 8, Rule 49.

4.504.2.4 Verification. Verification of compliance with this section shall be provided at the request of the enforcing agency. Documentation may include, but is not limited to, the following:

1. Manufacturer's product specification.
2. Field verification of on-site product containers.

TABLE 4.504.1 - ADHESIVE VOC LIMIT[1,2]

(Less Water and Less Exempt Compounds in Grams per Liter)

ARCHITECTURAL APPLICATIONS	VOC LIMIT
INDOOR CARPET ADHESIVES	50
CARPET PAD ADHESIVES	50
OUTDOOR CARPET ADHESIVES	150
WOOD FLOORING ADHESIVES	100
RUBBER FLOOR ADHESIVES	60
SUBFLOOR ADHESIVES	50
CERAMIC TILE ADHESIVES	65
VCT & ASPHALT TILE ADHESIVES	50
DRYWALL & PANEL ADHESIVES	50
COVE BASE ADHESIVES	50
MULTIPURPOSE CONSTRUCTION ADHESIVE	70
STRUCTURAL GLAZING ADHESIVES	100
SINGLE-PLY ROOF MEMBRANE ADHESIVES	250
OTHER ADHESIVES NOT LISTED	50
SPECIALTY APPLICATIONS	
PVC WELDING	510
CPVC WELDING	490
ABS WELDING	325
PLASTIC CEMENT WELDING	250
ADHESIVE PRIMER FOR PLASTIC	550
CONTACT ADHESIVE	80
SPECIAL PURPOSE CONTACT ADHESIVE	250
STRUCTURAL WOOD MEMBER ADHESIVE	140
TOP & TRIM ADHESIVE	250
SUBSTRATE SPECIFIC APPLICATIONS	
METAL TO METAL	30
PLASTIC FOAMS	50
POROUS MATERIAL (EXCEPT WOOD)	50
WOOD	30
FIBERGLASS	80

1. IF AN ADHESIVE IS USED TO BOND DISSIMILAR SUBSTRATES TOGETHER, THE ADHESIVE WITH THE HIGHEST VOC CONTENT SHALL BE ALLOWED.

2. FOR ADDITIONAL INFORMATION REGARDING METHODS TO MEASURE THE VOC CONTENT SPECIFIED IN THIS TABLE, SEE SOUTH COAST AIR QUALITY MANAGEMENT DISTRICT RULE 1168.

TABLE 4.504.2 - SEALANT VOC LIMIT

(Less Water and Less Exempt Compounds in Grams per Liter)

SEALANTS	VOC LIMIT
ARCHITECTURAL	250
MARINE DECK	760
NONMEMBRANE ROOF	300
ROADWAY	250
SINGLE-PLY ROOF MEMBRANE	450
OTHER	420
SEALANT PRIMERS	
ARCHITECTURAL	
NON-POROUS	250
POROUS	775
MODIFIED BITUMINOUS	500
MARINE DECK	760
OTHER	750

TABLE 4.504.3 - VOC CONTENT LIMITS FOR ARCHITECTURAL COATINGS[2,3]

GRAMS OF VOC PER LITER OF COATING, LESS WATER & LESS EXEMPT COMPOUNDS

COATING CATEGORY	VOC LIMIT
FLAT COATINGS	50
NON-FLAT COATINGS	100
NONFLAT-HIGH GLOSS COATINGS	150
SPECIALTY COATINGS	
ALUMINUM ROOF COATINGS	400
BASEMENT SPECIALTY COATINGS	400
BITUMINOUS ROOF COATINGS	50
BITUMINOUS ROOF PRIMERS	350
BOND BREAKERS	350
CONCRETE CURING COMPOUNDS	350
CONCRETE/MASONRY SEALERS	100
DRIVEWAY SEALERS	50
DRY FOG COATINGS	150
FAUX FINISHING COATINGS	350
FIRE RESISTIVE COATINGS	350
FLOOR COATINGS	100
FORM-RELEASE COMPOUNDS	250
GRAPHIC ARTS COATINGS (SIGN PAINTS)	500
HIGH TEMPERATURE COATINGS	420
INDUSTRIAL MAINTENANCE COATINGS	250
LOW SOLIDS COATINGS[4]	120
MAGNESITE CEMENT COATINGS	450
MASTIC TEXTURE COATINGS	100
METALLIC PIGMENTED COATINGS	500
MULTICOLOR COATINGS	250
PRETREATMENT WASH PRIMERS	420
PRIMERS, SEALERS, & UNDERCOATERS	100
REACTIVE PENETRATING SEALERS	350
RECYCLED COATINGS	250
ROOF COATINGS	50
RUST PREVENTATIVE COATINGS	250
SHELLACS	
CLEAR	730
OPAQUE	550
SPECIALTY PRIMERS, SEALERS & UNDERCOATERS	100
STAINS	250
STONE CONSOLIDANTS	450
SWIMMING POOL COATINGS	340
TRAFFIC MARKING COATINGS	100
TUB & TILE REFINISH COATINGS	420
WATERPROOFING MEMBRANES	250
WOOD COATINGS	275
WOOD PRESERVATIVES	350
ZINC-RICH PRIMERS	340

1. GRAMS OF VOC PER LITER OF COATING, INCLUDING WATER & EXEMPT COMPOUNDS

2. THE SPECIFIED LIMITS REMAIN IN EFFECT UNLESS REVISED LIMITS ARE LISTED IN SUBSEQUENT COLUMNS IN THE TABLE.

3. VALUES IN THIS TABLE ARE DERIVED FROM THOSE SPECIFIED BY THE CALIFORNIA AIR RESOURCES BOARD, ARCHITECTURAL COATINGS SUGGESTED CONTROL MEASURE, FEB. 1, 2008. MORE INFORMATION IS AVAILABLE FROM THE AIR RESOURCES BOARD.

TABLE 4.504.5 - FORMALDEHYDE LIMITS[1]

MAXIMUM FORMALDEHYDE EMISSIONS IN PARTS PER MILLION

PRODUCT	CURRENT LIMIT
HARDWOOD PLYWOOD VENEER CORE	0.05
HARDWOOD PLYWOOD COMPOSITE CORE	0.05
PARTICLE BOARD	0.09
MEDIUM DENSITY FIBERBOARD	0.11
THIN MEDIUM DENSITY FIBERBOARD[2]	0.13

1. VALUES IN THIS TABLE ARE DERIVED FROM THOSE SPECIFIED BY THE CALIF. AIR RESOURCES BOARD, AIR TOXICS CONTROL MEASURE FOR COMPOSITE WOOD AS TESTED IN ACCORDANCE WITH ASTM E 1333. FOR ADDITIONAL INFORMATION, SEE CALIF. CODE OF REGULATIONS, TITLE 17, SECTIONS 93120 THROUGH 93120.12.

2. THIN MEDIUM DENSITY FIBERBOARD HAS A MAXIMUM THICKNESS OF 5/16" (8 MM).

DIVISION 4.5 ENVIRONMENTAL QUALITY (continued)

4.504.3 CARPET SYSTEMS. All carpet installed in the building interior shall meet the requirements of the California Department of Public Health, "Standard Method for the Testing and Evaluation of Volatile Organic Chemical Emissions from Indoor Sources Using Environmental Chambers," Version 1.2, January 2017 (Emission testing method for California Specification 01350)

See California Department of Public Health's website for certification programs and testing labs.

https://www.cdph.ca.gov/Programs/CCDPHP/DEODC/EHLB/IAQ/Pages/VOC.aspx.

4.504.3.1 Carpet cushion. All carpet cushion installed in the building interior shall meet the requirements of the California Department of Public Health, "Standard Method for the Testing and Evaluation of Volatile Organic Chemical Emissions from Indoor Sources Using Environmental Chambers," Version 1.2, January 2017 (Emission testing method for California Specification 01350)

See California Department of Public Health's website for certification programs and testing labs.

https://www.cdph.ca.gov/Programs/CCDPHP/DEODC/EHLB/IAQ/Pages/VOC.aspx.

4.504.3.2 Carpet adhesive. All carpet adhesive shall meet the requirements of Table 4.504.1.

4.504.4 RESILIENT FLOORING SYSTEMS. Where resilient flooring is installed , at least 80% of floor area receiving resilient flooring shall meet the requirements of the California Department of Public Health, "Standard Method for the Testing and Evaluation of Volatile Organic Chemical Emissions from Indoor Sources Using Environmental Chambers," Version 1.2, January 2017 (Emission testing method for California Specification 01350)

See California Department of Public Health's website for certification programs and testing labs.

https://www.cdph.ca.gov/Programs/CCDPHP/DEODC/EHLB/IAQ/Pages/VOC.aspx.

4.504.5 COMPOSITE WOOD PRODUCTS. Hardwood plywood, particleboard and medium density fiberboard composite wood products used on the interior or exterior of the buildings shall meet the requirements for formaldehyde as specified in ARB's Air Toxics Control Measure for Composite Wood (17 CCR 93120 et seq.), by or before the dates specified in those sections, as shown in Table 4.504.5

4.504.5.1 Documentation. Verification of compliance with this section shall be provided as requested by the enforcing agency. Documentation shall include at least one of the following:

1. Product certifications and specifications.
2. Chain of custody certifications.
3. Product labeled and invoiced as meeting the Composite Wood Products regulation (see CCR, Title 17, Section 93120, et seq.).
4. Exterior grade products marked as meeting the PS-1 or PS-2 standards of the Engineered Wood Association, the Australian AS/NZS 2269, European 636 3S standards, and Canadian CSA 0121, CSA 0151, CSA 0153 and CSA 0325 standards.
5. Other methods acceptable to the enforcing agency.

4.505 INTERIOR MOISTURE CONTROL

4.505.1 General. Buildings shall meet or exceed the provisions of the *California Building Standards Code*.

4.505.2 CONCRETE SLAB FOUNDATIONS. Concrete slab foundations required to have a vapor retarder by California Building Code, Chapter 19, or concrete slab-on-ground floors required to have a vapor retarder by the California Residential Code, Chapter 5, shall also comply with this section.

4.505.2.1 Capillary break. A capillary break shall be installed in compliance with at least one of the following:

1. A 4-inch (101.6 mm) thick base of 1/2 inch (12.7mm) or larger clean aggregate shall be provided with a vapor barrier in direct contact with concrete and a concrete mix design, which will address bleeding, shrinkage, and curling, shall be used. For additional information, see American Concrete Institute, ACI 302.2R-06.
2. Other equivalent methods approved by the enforcing agency.
3. A slab design specified by a licensed design professional.

4.505.3 MOISTURE CONTENT OF BUILDING MATERIALS. Building materials with visible signs of water damage shall not be installed. Wall and floor framing shall not be enclosed when the framing members exceed 19 percent moisture content. Moisture content shall be verified in compliance with the following:

1. Moisture content shall be determined with either a probe-type or contact-type moisture meter.Equivalent moisture verification methods may be approved by the enforcing agency and shall satisfy requirements found in Section 101.8 of this code.
2. Moisture readings shall be taken at a point 2 feet (610 mm) to 4 feet (1219 mm) from the grade stamped end of each piece verified.
3. At least three random moisture readings shall be performed on wall and floor framing with documentation acceptable to the enforcing agency provided at the time of approval to enclose the wall and floor framing.

Insulation products which are visibly wet or have a high moisture content shall be replaced or allowed to dry prior to enclosure in wall or floor cavities. Wet-applied insulation products shall follow the manufacturers' drying recommendations prior to enclosure.

4.506 INDOOR AIR QUALITY AND EXHAUST

4.506.1 Bathroom exhaust fans. Each bathroom shall be mechanically ventilated and shall comply with the following:

M-0.1 See note #8 & #9 under "Calgreen Notes"

1. Fans shall be ENERGY STAR compliant and be ducted to terminate outside the building.
2. Unless functioning as a component of a whole house ventilation system, fans must be controlled by a humidity control.
   a. Humidity controls shall be capable of adjustment between a relative humidity range less than or equal to 50% to a maximum of 80%. A humidity control may utilize manual or automatic means of adjustment.
   b. A humidity control may be a separate component to the exhaust fan and is not required to be integral (i.e., built-in)

Notes:

1. For the purposes of this section, a bathroom is a room which contains a bathtub, shower or tub/shower combination.
2. Lighting integral to bathroom exhaust fans shall comply with the *California Energy Code*.

4.507 ENVIRONMENTAL COMFORT

4.507.2 HEATING AND AIR-CONDITIONING SYSTEM DESIGN. Heating and air conditioning systems shall be sized, designed and have their equipment selected using the following methods:

M-0.1 See note #4 under "Calgreen Notes"

1. The heat loss and heat gain is established according to ANSI/ACCA 2 Manual J - 2011 (Residential Load Calculation), ASHRAE handbooks or other equivalent design software or methods.
2. Duct systems are sized according to ANSI/ACCA 1 Manual D - 2014 (Residential Duct Systems), ASHRAE handbooks or other equivalent design software or methods.
3. Select heating and cooling equipment according to ANSI/ACCA 3 Manual S - 2014 (Residential Equipment Selection), or other equivalent design software or methods.

Exception: Use of alternate design temperatures necessary to ensure the system functions are acceptable.

CHAPTER 7
INSTALLER & SPECIAL INSPECTOR QUALIFICATIONS

702 QUALIFICATIONS

702.1 INSTALLER TRAINING. HVAC system installers shall be trained and certified in the proper installation of HVAC systems including ducts and equipment by a nationally or regionally recognized training or certification program. Uncertified persons may perform HVAC installations when under the direct supervision and responsibility of a person trained and certified to install HVAC systems or contractor licensed to install HVAC systems. Examples of acceptable HVAC training and certification programs include but are not limited to the following:

M-0.1 See note #10 under "Calgreen Notes"

1. State certified apprenticeship programs.
2. Public utility training programs.
3. Training programs sponsored by trade, labor or statewide energy consulting or verification organizations.
4. Programs sponsored by manufacturing organizations.
5. Other programs acceptable to the enforcing agency.

702.2 SPECIAL INSPECTION [HCD]. When required by the enforcing agency, the owner or the responsible entity acting as the owner's agent shall employ one or more special inspectors to provide inspection or other duties necessary to substantiate compliance with this code. Special inspectors shall demonstrate competence to the satisfaction of the enforcing agency for the particular type of inspection or task to be performed. In addition to other certifications or qualifications acceptable to the enforcing agency, the following certifications or education may be considered by the enforcing agency when evaluating the qualifications of a special inspector:

M-0.1 See note #12 under "Calgreen Notes"

1. Certification by a national or regional green building program or standard publisher.
2. Certification by a statewide energy consulting or verification organization, such as HERS raters, building performance contractors, and home energy auditors.
3. Successful completion of a third party apprentice training program in the appropriate trade.
4. Other programs acceptable to the enforcing agency.

Notes:

1. Special inspectors shall be independent entities with no financial interest in the materials or the project they are inspecting for compliance with this code.
2. HERS raters are special inspectors certified by the California Energy Commission (CEC) to rate homes in California according to the Home Energy Rating System (HERS).

[BSC] When required by the enforcing agency, the owner or the responsible entity acting as the owner's agent shall employ one or more special inspectors to provide inspection or other duties necessary to substantiate compliance with this code. Special inspectors shall demonstrate competence to the satisfaction of the enforcing agency for the particular type of inspection or task to be performed. In addition, the special inspector shall have a certification from a recognized state, national or international association, as determined by the local agency. The area of certification shall be closely related to the primary job function, as determined by the local agency.

Note: Special inspectors shall be independent entities with no financial interest in the materials or the project they are inspecting for compliance with this code.

703 VERIFICATIONS

703.1 DOCUMENTATION. Documentation used to show compliance with this code shall include but is not limited to, construction documents, plans, specifications, builder or installer certification, inspection reports, or other methods acceptable to the enforcing agency which demonstrate substantial conformance. When specific documentation or special inspection is necessary to verify compliance, that method of compliance will be specified in the appropriate section or identified applicable checklist.

M-0.1 See note #13 under "Calgreen Notes"

LICENSED ARCHITECT ZHUSHUANG CHEN NO. C-28156 REN. 5/31/25 STATE OF CALIFORNIA

CG-MM2

DISCLAIMER: *THIS DOCUMENT IS PROVIDED AND INTENDED TO BE USED AS A MEANS TO INDICATE AREAS OF COMPLIANCE WITH THE CALIFORNIA GREEN BUILDING STANDARDS (CALGREEN) CODE. DUE TO THE VARIABLES BETWEEN BUILDING DEPARTMENT JURISDICTIONS, THIS CHECKLIST IS TO BE USED ON AN INDIVIDUAL PROJECT BASIS AND MAY BE MODIFIED BY THE END USER TO MEET THOSE INDIVIDUAL NEEDS. THE END USER ASSUMES ALL RESPONSIBILITY ASSOCIATED WITH THE USE OF THIS DOCUMENT, INCLUDING VERIFICATION WITH THE FULL CODE.*

ARCH D Size -24x36

GreenPointRATED
A PROGRAM OF BUILD IT GREEN

NEW HOME RATING SYSTEM, VERSION 9.1

Blueprint Scoresheet

Points Targeted: 85.4

Certification Level Targeted: Silver

Compliance Pathway Targeted: Option 1: All Electric Compliance

T24 Compliance Targeted: 4 %

Tennant Square - 215 Tennant Ave		Points Targeted	Possible Points: Community	Energy	IAQ/Health	Resources	Water	Responsible Party	Blueprint Page No.
CALGreen									
Yes	CALGreen (REQUIRED)	4		1	1	1	1		
A. SITE									
	A2. Job Site Construction Waste Diversion								
Yes	A2.1 70% C&D Waste Diversion (Including Alternative Daily Cover)	2				2			
Yes	A2.2 Recycling Rates from Third-Party Verified Mixed-Use Waste Facility	1				1			
	A6. Stormwater Control: Prescriptive Path								
Yes	A6.3 Non-Leaching Roofing Materials	1					1		
B. FOUNDATION									
≥50%	**B1. Low Carbon Concrete**	3				3			
C. LANDSCAPE									
Yes	**C13. Reduced Light Pollution**	1	1						
D. STRUCTURAL FRAME AND BUILDING ENVELOPE									
	D9. Reduced Pollution Entering the Home from the Garage								
Yes	D9.2 Mitigation Strategies for Attached Garage	1			1				
Yes	**D11. Moisture-Resistant Materials in Wet Areas (such as Kitchen, Bathrooms, Utility Rooms, and Basements)**	2			1	1			
E. EXTERIOR									
Yes	**E4. Durable and Non-Combustible Cladding Materials**	1				1			
Yes	**E5. Durable and Fire Resistant Roofing Materials or Assembly**	1				1			
G. PLUMBING									
	G1. Efficient Distribution of Domestic Hot Water								
Yes	G1.2 WaterSense Volume Limit for Hot Water Distribution	1					1		
Yes	G1.3 Increased Efficiency in Hot Water Distribution	2					2		
	G2. Install Water-Efficient Fixtures								
Yes	G2.1 WaterSense Showerheads ≤ 1.75 gpm	2					2		
Yes	G2.2 WaterSense Bathroom Faucets ≤ 1.0 gpm	1					1		
1.28 gpf	G2.3 WaterSense Toilets with a Maximum Performance (MaP) Threshold of No Less Than 500 Grams ≤ 1.28 gpf OR ≤ 1.1 gpf	1					2		
H. HEATING, VENTILATION, AND AIR CONDITIONING									
	H3. Effective Ductwork								
Yes	H3.1 Duct Mastic on Duct Joints and Seams	1		1					
	H5. Advanced Practices for Cooling								
Yes	H5.1 ENERGY STAR® Ceiling Fans in Living Areas and Bedrooms	1		1					
	H6. Whole House Mechanical Ventilation Practices to Improve Indoor Air Quality								
Yes	H6.1 Meet ASHRAE Standard 62.2-2019 Ventilation Residential Standards	Y	R	R	R	R	R		
I. RENEWABLE ENERGY									
	I1. Onsite Renewable Generation (PV, Micro Hydro and Wind)			25					
J. BUILDING PERFORMANCE AND TESTING									
Yes	**J1. Third-Party Verification of Quality of Insulation Installation**	1			1				
	J5. Building Energy Performance								
Option 1: All Electric Compliance	J5.1 All Electric Home Outperforms Title 24	33.4		25+					
K. FINISHES									
	K1. Entryways Designed to Reduce Tracked-In Contaminants								
Yes	K1.1 Entryways to Individual Units	1			1				
Yes	**K3. Low-VOC Caulks and Adhesives**	1			1				
	K4. Environmentally Preferable Materials for Interior Finish								
≥50%	K4.1 Cabinets	1				2			
≥50%	K4.2 Interior Trim	1				2			
≥50%	K4.3 Shelving	1				2			
≥50%	K4.4 Doors	1				2			
Yes	K4.5 Countertops	1				1			
	K5. Formaldehyde Emissions in Interior Finish Exceed CARB								
Yes	K5.1 Doors	1			1				
Yes	K5.2 Cabinets and Countertops	2			2				
Yes	K5.3 Interior Trim and Shelving	2			2				
M. APPLIANCES AND LIGHTING									
Yes	**M1. ENERGY STAR® Dishwasher**	1					1		
	M2. Efficient Clothes Washing and Drying								
CEE Tier 2	M2.1 CEE-Rated or ENERGY STAR® Clothes Washer	2		1			2		
Yes	M2.2 ENERGY STAR® Dryer	1		2					
	M5. Lighting Efficiency								
Yes	M5.1 High-Efficacy Lighting	2		2					
N. COMMUNITY									
	N1. Smart Development								
Yes	N1.1 Infill Site	2	1			1			
	N2. Home(s)/Development Located Near Transit								
Yes	N2.1 Within 1 Mile of a Major Transit Stop	1	1						
	N3. Pedestrian and Bicycle Access								
≥15%	N3.5 Bicycle Storage for Residents	1	2						
	N4. Outdoor Gathering Places								
Yes	N4.1 Public or Semi-Public Outdoor Gathering Places for Residents	1	1						
O. OTHER									
Yes	**O1. GreenPoint Rated Checklist in Blueprints**	Y	R	R	R	R	R		
Yes	**O2. Pre-Construction Kickoff Meeting with Rater and Subcontractors**	2		0.5		1	0.5		

Summary		Community	Energy	IAQ/Health	Resources	Water
Total Available Points in Specific Categories	425.5	50	131.5	83	100	61
Minimum Points Required in Specific Categories	50	2	25	6	6	6
Total Points Targeted	**85.4**	**5**	**41**	**11**	**17**	**11.5**

GREEN BUILDING CHECKLIST

REVISIONS	BY

BUILDERS' ENERGY SERVICES, INC.
460 WEST EDMUNDSON AVENUE, MORGAN HILL, CA 95037
(408) 202-8075 www.title24.com heather@builders-energy.net
Making a Difference In Energy Design since 1978

SERVING ARCHITECTS, BUILDERS AND HOMEOWNERS

TITLE 24
HERS RATINGS
GREEN POINT RATERS

ENERGY STAR PARTNERS
HERS II CERTIFIED
CEA CERTIFIED

WITH OFFICES IN:
MORGAN HILL
SAN JOSE

TENNANT SQUARE
215 TENNANT AVENUE
MORGAN HILL, CA 95037

LICENSED ARCHITECT
ZUYSHIANG CHEN
NO. C-28156
REN. 5/31/25
STATE OF CALIFORNIA

Date	03/28/24
Drawn	HEC
Client's Job #	
BES Job #	11637
Sheet	GB-1

STAMP: 21x32 4x3

CERTIFICATE OF COMPLIANCE LMCC-LTO

This document is used to demonstrate compliance with requirements in 110.9, 130.0, 130.2, 140.7, and 141.0(b)2I, for outdoor lighting scopes using the prescriptive path for nonresidential and hotel/motel occupancies in low-rise multifamily mixed-use buildings. It is also used to document compliance with requirements in 160.5, 170.2(e)6, 180.1(a) and 180.2(b)4Bv for outdoor lighting scopes using the prescriptive path for low-rise multifamily occupancies. Multifamily includes dormitory and senior living facilities.

Project Name: 215 Tennant	**Report Page:** (Page 1
Project Address:	**Date Prepared:**

A. GENERAL INFORMATION

01	Project Location (city)	Morgan Hill	04	Total Illuminated Hardscape Area (ft²)	15570
02	Climate Zone	4			
03	Outdoor Lighting Zone per Title 24 Part 1, 10.114 or as designated by Authority Having Jurisdiction (AHJ):				
☐	LZ-0: Very Low - Undeveloped Parkland	☒ LZ-1: Moderate - Urban Clusters	☐ LZ-4: High - Must be reviewed by CA Energy Commission for Approval		
☐	LZ-1: Low - Rural Areas	☐ LZ-3: Moderately High - Urban Areas			
05	Occupancy Types within Project				

• Multi-family/ MF Mixed-use 4 stories

B. PROJECT SCOPE

This table includes outdoor lighting systems that are within the scope of the permit application and are demonstrating compliance using the prescriptive path outlined in 140.7 / 170.2(e)6 or 141.0(b)2I, / 180.2(b)4Bv for alterations.

My Project Consists of:

01	02	
☒ New Lighting System	Must Comply with Allowances from 140.7 / 170.2(e)6	
☐ Altered Lighting System	Is your alteration increasing the connected lighting load (Watts)?	○ Yes ○ No
03	04	05
% of Existing Luminaires Being Altered[1]	Sum Total of Luminaires Being Added or Altered	Calculation Method
☐ < 10% ☐ >= 10% and < 50% ☐ >= 50%		

Please proceed to Table F. Outdoor Lighting Fixture Schedule to define the project's luminaires.

[1] FOOTNOTES: % of Existing Luminaires Being Altered = (Sum Total of Luminaires Being Added or Altered / Existing Luminaires within the Scope of the Permit Application) x 100.

Registration Number:
CA Building Energy Efficiency Standards - 2022 Low-rise Multifamily Compliance

Generated Date/Time:
Report Version: 2022.0.000
Schema Version: rev 20220101

Documentation Software: Energy Code
Compliance ID: 179153-0324-0
Report Generated: 2024-03-25 12:4

CERTIFICATE OF COMPLIANCE LMCC-LTO-01-E

Project Name: 215 Tennant	**Report Page:** (Page 2 of 8)
	Date Prepared:

C. COMPLIANCE RESULTS

Results in this table are automatically calculated from data input and calculations in Tables F through N. Note: If any cell on this table says "COMPLIES with Exceptional Conditions" refer to Table D. Exceptional Conditions for guidance or see applicable Table referenced below.

Calculations of Total Allowed Lighting Power (Watts) 140.7 / 170.2(e)6 or 141.0(b)2I, / 180.2(b)4Bv | **Compliance Results**

01		02		03		04		05		06		07		08		09
General Hardscape Allowance 140.7(d)1 / 170.2(e)6 (See Table I)	+	Per Application 140.7(d)2 / 170.2(e)6 (See Table J)	+	Sales Frontage 140.7(d)2 (See Table K)	+	Ornamental 140.7(d)2 / 170.2(e)6 (See Table L)	+	Per Specific Area 140.7(d)2 / 170.2(e)6 (See Table M)	OR	Existing Power Allowance 141.0(b)2I, / 180.2(b)4Bv (See Table N)	=	**Total Allowed** (Watts)	≥	**Total Actual** (Watts)		**07 must be >= 08**
817.1	+	----	+	----	+	----	+	----	OR	----	=	817.1	≥	578		COMPLIES
Shielding Compliance (See Table G for Details)																COMPLIES
Controls Compliance (See Table H for Details)																COMPLIES

D. EXCEPTIONAL CONDITIONS

This table is auto-filled with uneditable comments because of selections made or data entered in tables throughout the form.

E. ADDITIONAL REMARKS

This table includes remarks made by the permit applicant to the Authority Having Jurisdiction.

Registration Number:
CA Building Energy Efficiency Standards - 2022 Low-rise Multifamily Compliance

Generated Date/Time:
Report Version: 2022.0.000
Schema Version: rev 20220101

Documentation Software: Energy Code Ace
Compliance ID: 179153-0324-0004
Report Generated: 2024-03-25 12:41:56

CERTIFICATE OF COMPLIANCE LMCC-LTO-01-E

Project Name: 215 Tennant	**Report Page:** (Page 3 of 8)
	Date Prepared:

F. OUTDOOR LIGHTING FIXTURE SCHEDULE

For new or altered lighting systems demonstrating compliance with 140.7 / 170.2(e)6 all new luminaires being installed and any existing luminaires remaining or being moved within the spaces covered by the permit application are included in the Table below. For altered lighting systems using the Existing Power method per 141.0(b)2I, only new luminaires being installed and replacement luminaires being installed as part of the project scope are included (ie, existing luminaires remaining or existing luminaires being moved are not included). Outdoor lighting attached to multifamily buildings and controlled from the inside of a dwelling unit are included in Table H, and are not included here. All other multifamily outdoor lighting is included here.

Designed Wattage:

01	02		03	04	05	06	07	08	09	10	
Name or Item Tag	Complete Luminaire Description		Watts per luminaire[1, 2]	How is Wattage determined	Total Number Luminaires [2]	Luminaire Status[3]	Excluded per 140.7(a) / 170.2(e)6A	Design Watts	Cutoff Req. > 6,200 initial lumen output / 130.2(b) / 160.5(c)1[4]	Field Inspector Pass	Fail
WP	AFX SATW09150BL30ENBK	☐ Linear	11	Mfr. Spec	4	New	☐	44	NA: < 6200 lumens	☐	☐
A1	Sternberg SL660-12L30T4-MDL018-SV1-BLOC	☐ Linear	60	Mfr. Spec	5	New	☐	300	NA: < 6200 lumens	☐	☐
BB	Sternberg SL660-24L30T4-MDL018-SV1-BLOC	☐ Linear	117	Mfr. Spec	2	New	☐	234	Provided	☐	☐
							Total Design Watts:	578			

* NOTES: Selections with a * require a note in the space below explaining how compliance is achieved.
EX: Luminaire is lighting a statue; EXCEPTION 2 to 130.2(b)

[1] FOOTNOTES: Authority Having Jurisdiction may ask for Luminaire cut sheets to confirm wattage used for compliance per 130.0(c) / 160.5(b)
[2] For linear luminaires, wattage should be indicated as W/F instead of Watts/luminaire. Total linear feet should be indicated in column 05 instead of number of luminaires.
[3] Select "New" for new luminaires in a new outdoor lighting project, or for added luminaires in an alteration. Select "Altered" for replacement luminaires in an alteration. Select "Existing to Remain" for existing luminaires within the project scope that are not being altered and are remaining. Select "Existing Reinstalled" for existing luminaires which are being removed and reinstalled as part of the project scope.
[4] Compliance with mandatory shielding requirements is required for luminaires with initial lumen output >= 6,200 unless exempted by 130.2(b)/ 160.5(c)

Registration Number:
CA Building Energy Efficiency Standards - 2022 Low-rise Multifamily Compliance

Generated Date/Time:
Report Version: 2022.0.000
Schema Version: rev 20220101

Documentation Software: Energy Code Ace
Compliance ID: 179153-0324-0004
Report Generated: 2024-03-25 12:41:56

CERTIFICATE OF COMPLIANCE LMCC-LTO-01-E

Project Name: 215 Tennant	**Report Page:** (Page 4 of 8)
	Date Prepared:

G. SHIELDING REQUIREMENTS (BUG)

This table includes fixtures of >=6,200 initial lumens indicated on Table F as needing to comply with Shielding Requirements. Maximum lumens can be found in Title 24, Part 11, Section 5.106.8.

01	02	03	04	05	06	07	08	09	10	11	12	
		Backlight Rating[2]			Uplight Rating[2]			Glare Rating (Lumens)[2]			Field Inspector	
Name or Item Tag	Complete Luminaire Description	Mounting Height[1]	Max Allowable Backlight Rating[1]	Backlight Rating Per Design	Lighting type	Max Allowable Uplight Rating[1]	Uplight Rating Per Design	Mounting Height[1]	Max Allowable Glare Rating[1]	Glare Rating Per Design	Pass	Fail
BB	Sternberg SL660-24L30T4-MDL018-SV1-BLOC	Back hemisphere is 1 .2 MH from prop line	B3	B1	Area Lighting	U0	U0	Front hemisphere is 1 .2 MH from prop line	G1	G1	☐	☐

[1] FOOTNOTES: Mounting Height is labeled MH in this table.
[2] Authority Having Jurisdiction may ask for Luminaire cut sheets or other documentation to confirm luminaire type, uplight ratings and glare ratings used for compliance per 130.2(b)/ 160.5(c)
[3] BUG ratings with a lower number than the 'Max Allowable' are compliant. Ex. If Max Allowable is Bug Rating B4, then B0, B1, B2 and B3 are all compliant.

H. OUTDOOR LIGHTING CONTROLS

This table demonstrates compliance with controls requirements for all new or altered luminaires installed as part of the permit application. For alteration projects, luminaires which are existing to remain (ie untouched) and luminaires which are removed and reinstalled (wiring only) do not need to be included in this table even if they are within the spaces covered by the permit application.
Outdoor lighting for nonresidential buildings, parking garages and common service areas in multifamily buildings must be documented separately from outdoor lighting attached to multifamily buildings and controlled from the inside of a dwelling unit

Mandatory Controls for Nonresidential Occupancies, Parking Garages & Common Areas in Multifamily Buildings

01	02	03	04	05	
Area Description	Shut-Off 130.2(c)1 / 160.5(c)	Auto-Schedule 130.2(c)2 / 160.5(c)	Motion Sensor 130.2(c)3 / 160.5(c)	Field Inspector Pass	Fail
General Hardscape: "WP"	Astronomical Timer	Provided	NA: Each Luminaire <= 40 Watts	☐	☐
General Hardscape: "A1"	Astronomical Timer	Provided	Provided	☐	☐
General Hardscape: "BB"	Astronomical Timer	Provided	Provided	☐	☐

Registration Number:
CA Building Energy Efficiency Standards - 2022 Low-rise Multifamily Compliance

Generated Date/Time:
Report Version: 2022.0.000
Schema Version: rev 20220101

Documentation Software: Energy Code Ace
Compliance ID: 179153-0324-0004
Report Generated: 2024-03-25 12:41:56

CERTIFICATE OF COMPLIANCE LMCC-LTO-01-E

Project Name: 215 Tennant	**Report Page:** (Page 5 of 8)
	Date Prepared:

H. OUTDOOR LIGHTING CONTROLS

Outdoor Lighting Controlled from Inside Multifamily Dwelling Units

01	02	03	04
Space Name	Compliant Light Sources[1,2] 160.5(a)1	Mandatory Controls 160.5(a) Shut-Off	Recessed Downlights[3] 160.5(a)1C

[1] FOOTNOTE: Text has been abbreviated, please refer to Table 160.5 A to confirm compliance with the specific light source technologies listed.
[2] Authority having jurisdiction may ask for cutsheets or other documentation to confirm compliance of light source.
[3] Recessed luminaires marked for use in fire-rated installations, and recessed luminaires installed in non-insulated ceilings are excepted from ii and iii.

I. LIGHTING POWER ALLOWANCE (per 140.7 / 170.2(e))

This table includes areas using allowance calculations per 140.7 / 170.2(e). General Hardscape Allowance is per Table 140.7-A/Table 170.2-R while "Use it or lose it" Allowances are per Table 140.7-B /Table 170.2-S. Indicate which allowances are being used to expand sections for user input. Luminaires that qualify for one of the "Use it or lose it" allowances shall not qualify for another "Use it or lose it" allowance.
Outdoor lighting attached to multifamily buildings and controlled from the inside of a dwelling unit are included in Table H. and are not included here. All other multifamily outdoor lighting is included here.

	01				
	"Use it or lose it" Allowance (select all that apply) (select all that apply)				
	☒ General Hardscape Allowance Table I (below)	☐ Per Application Table J	☐ Sales Frontage Table K	☐ Ornamental Table L	☐ Per Specific Area Table M

Calculated General Hardscape Lighting Power Allowance per Table 170.2-R for Multifamily & Multifamily Mixed-Use

02	03	04	05
Area Description	Area Wattage Allowance (AWA)		
	Illuminated Area (ft²)	Allowed Density (W/ft²)	Area Allowance (Watts)
General Hardscape	15570	0.03	467.1
Initial Wattage Allowance for Entire Site (Watts):			350
Instances of Initial Wattage Allowance (LZ 0 only)[1]			
Total General Hardscape Allowance (Watts):			817.1

[1] FOOTNOTES: Number of entrances to parking areas, trail heads, fee payment kiosks, outhouses and toilet facilities on site where lighting is within project scope.

J. LIGHTING ALLOWANCE: PER APPLICATION

This section does not apply to this project.

Registration Number:
CA Building Energy Efficiency Standards - 2022 Low-rise Multifamily Compliance

Generated Date/Time:
Report Version: 2022.0.000
Schema Version: rev 20220101

Documentation Software: Energy Code Ace
Compliance ID: 179153-0324-0004
Report Generated: 2024-03-25 12:41:56

CERTIFICATE OF COMPLIANCE LMCC-LTO-01-E

Project Name: 215 Tennant	**Report Page:** (Page 6 of 8)
	Date Prepared:

K. LIGHTING ALLOWANCE: SALES FRONTAGE

This section does not apply to this project.

L. LIGHTING ALLOWANCE: ORNAMENTAL

This section does not apply to this project.

M. LIGHTING ALLOWANCE: PER SPECIFIC AREA

This section does not apply to this project.

N. EXISTING CONDITIONS POWER ALLOWANCE (alterations only)

This section does not apply to this project.

O. DECLARATION OF REQUIRED CERTIFICATES OF INSTALLATION

Selections have been made based on information provided in this document. If any selection has been changed by permit applicant, an explanation should be included in Table E. Additional Remarks. These documents must be provided to the building inspector during construction and can be found online

Form/Title
LMCI-LTO-E - Must be submitted for all buildings

Registration Number:
CA Building Energy Efficiency Standards - 2022 Low-rise Multifamily Compliance

Generated Date/Time:
Report Version: 2022.0.000
Schema Version: rev 20220101

Documentation Software: Energy Code Ace
Compliance ID: 179153-0324-0004
Report Generated: 2024-03-25 12:41:56

CERTIFICATE OF COMPLIANCE LMCC-LTO-01-E

Project Name: 215 Tennant	**Report Page:** (Page 7 of 8)
	Date Prepared:

P. DECLARATION OF REQUIRED CERTIFICATES OF ACCEPTANCE

Selections have been made based on information provided in this document. If any selection has been changed by permit applicant, an explanation should be included in Table E. Additional Remarks. These documents must be provided to the building inspector during construction and must be completed through an Acceptance Test Technician Certification Provider (ATTCP). For more information visit: http://www.energy.ca.gov/title24/attcp/providers.html

Form/Title	Systems/Spaces To Be Field Verified
NRCA-LTO-02-A - Must be submitted for all outdoor lighting controls except for alterations where controls are added to <= 20 luminaires.	General Hardscape: "WP"; General Hardscape: "A1"; General Hardscape: "BB"

Registration Number:
CA Building Energy Efficiency Standards - 2022 Low-rise Multifamily Compliance

Generated Date/Time:
Report Version: 2022.0.000
Schema Version: rev 20220101

Documentation Software: Energy Code Ace
Compliance ID: 179153-0324-0004
Report Generated: 2024-03-25 12:41:56

CERTIFICATE OF COMPLIANCE LMCC-LTO-01-E

Project Name: 215 Tennant	**Report Page:** (Page 8 of 8)
Project Address:	**Date Prepared:**

DOCUMENTATION AUTHOR'S DECLARATION STATEMENT

I certify that this Certificate of Compliance documentation is accurate and complete.

Documentation Author Name: Kristian Reyes	**Documentation Author Signature:**
Company: Associated Lighting Reps., Inc	**Signature Date:** 10/17/24
Address: 7777 Pardee Lane	**CEA/ HERS Certification Identification (if applicable):**
City/State/Zip: Oakland, CA 94621	**Phone:** 510-638-3800

RESPONSIBLE PERSON'S DECLARATION STATEMENT

I certify the following under penalty of perjury, under the laws of the State of California:

1. The information provided on this Certificate of Compliance is true and correct.
2. I am eligible under Division 3 of the Business and Professions Code to accept responsibility for the building design or system design identified on this Certificate of Compliance (responsible designer)
3. The energy features and performance specifications, materials, components, and manufactured devices for the building design or system design identified on this Certificate of Compliance conform to the requirements of Title 24, Part 1 and Part 6 of the California Code of Regulations.
4. The building design features or system design features identified on this Certificate of Compliance are consistent with the information provided on other applicable compliance documents, worksheets, calculations, plans and specifications submitted to the enforcement agency for approval with this building permit application.
5. I will ensure that a completed signed copy of this Certificate of Compliance shall be made available with the building permit(s) issued for the building, and made available to the enforcement agency for all applicable inspections. I understand that a completed signed copy of this Certificate of Compliance is required to be included with the documentation the builder provides to the building owner at occupancy.

Responsible Designer Name: Drew Feiner	**Responsible Designer Signature:**
Company: Trutech Energy Services	**Date Signed:** 4/15/2
Address: 7275 National Drive Suite A3	**License:** 004464
City/State/Zip: Livermore CA 94550	**Phone:** 925-784-5355

Registration Number:
CA Building Energy Efficiency Standards - 2022 Low-rise Multifamily Compliance

Generated Date/Time:
Report Version: 2022.0.000
Schema Version: rev 20220101

Documentation Software: Energy Code Ace
Compliance ID: 179153-0324-0004
Report Generated: 2024-03-25 12:41:56

THESE DRAWINGS ARE THE PROPERTY OF OSITO HOLDINGS, LLC AND ARE INTENDED FOR USE SOLELY ON THE PROJECT TITLED HEREON. THESE DRAWINGS AS PROTECTED UNDER COPYRIGHT LAWS ARE NOT TO BE REPRODUCED IN WHOLE OR PART IN ANY MANNER WITHOUT THE EXPRESSED WRITTEN CONSENT OF THE DESIGNER. USE OF THESE DRAWINGS IS LIMITED TO THE SITE INTENDED AND THEIR USE AT ANY OTHER SITE, OR ON OTHER PROJECTS IS PROHIBITED EXCEPT BY PRIOR WRITTEN CONSENT OF THE DESIGNER. ALL REPRODUCTINS OF THESE DRAWINGS, IN WHOLE OR PART, REMAIN UNDER THE OWNERSHIP OF THE DESIGNER AND SHALL BE RETURNED UPON COMPLETION OF THE PROJECT OR UPON REQUEST OF THE DESIGNER.

COPYRIGHT © 2020

OWNER / DEVELOPER:
OSITO HOLDINGS, LLC
P.O. BOX 2827
MESA, AZ 85214
(480) 646 6323

PROJECT:
TENNANT SQUARE
215 TENNANT AVENUE
MORGAN HILL, CA.
COUNTY OF
SANTA CLARA

DRAWING:
OUTDOOR LIGHTING CERTIFICATE OF COMPLIANCE

LICENSED ARCHITECT
ZUISHUANG CHEN
NO. C-28156
REN. 5/31/25
STATE OF CALIFORNIA

REVISIONS:

DATE: APRIL 29, 2024
SCALE: AS NOTED
DRAWN BY: G.E.MOORE
PROJ. MGR. G.E.MOORE
PROJECT FILE: 0.20-TENNANT
DRAWING: LMCC