BORELLO RANCH BACKBONE PHASE 3

MORGAN HILL, CALIFORNIA

GENERAL NOTES

1. THE CONTRACTOR AGREES THAT, IN ACCORDANCE WITH GENERALLY ACCEPTED CONSTRUCTION PRACTICES, THE CONTRACTOR WILL BE REQUIRED TO ASSUME SOLE AND COMPLETE RESPONSIBILITY FOR JOB SITE CONDITIONS DURING THE COURSE OF CONSTRUCTION OF THE PROJECT, INCLUDING SAFETY OF ALL PERSONS AND PROPERTY. THIS REQUIREMENT SHALL BE MADE TO APPLY CONTINUOUSLY AND NOT BE LIMITED TO NORMAL WORKING HOURS. THE CONTRACTOR FURTHER AGREES TO DEFEND, INDEMNIFY AND HOLD OWNER AND ENGINEER HARMLESS FROM ANY AND ALL LIABILITY, REAL OR ALLEGED, IN CONNECTION WITH THE PERFORMANCE OF WORK ON THIS PROJECT, EXEMPTING LIABILITY ARISING FROM THE SOLE NEGLIGENCE OF ENGINEER.
2. EXCAVATIONS SHALL BE ADEQUATELY SHORED, BRACED AND SHEETED SO THAT THE EARTH WILL NOT SLIDE OR SETTLE AND SO THAT ALL EXISTING IMPROVEMENTS OF ANY KIND WILL BE FULLY PROTECTED FROM DAMAGE. ANY DAMAGE RESULTING FROM A LACK OF ADEQUATE SHORING, BRACING AND SHEETING, SHALL BE THE RESPONSIBILITY OF THE CONTRACTOR AND HE SHALL EFFECT NECESSARY REPAIRS OR RECONSTRUCTION AT HIS OWN EXPENSE. WHERE THE EXCAVATION FOR A CONDUIT TRENCH, AND/OR STRUCTURE IS FIVE FEET OR MORE IN DEPTH, THE CONTRACTOR SHALL PROVIDE ADEQUATE SHEETING, SHORING AND BRACING OR EQUIVALENT METHOD, FOR THE PROTECTION OF LIFE, OR LIMB, WHICH SHALL CONFORM TO THE APPLICABLE CONSTRUCTION SAFETY ORDERS OF THE DIVISION OF INDUSTRIAL SAFETY OF THE STATE OF CALIFORNIA, THE CONTRACTOR SHALL ALWAYS COMPLY WITH OSHA REQUIREMENTS.
3. ALL APPLICABLE REQUIREMENTS OF THE CALIFORNIA CONSTRUCTION AND GENERAL INDUSTRY SAFETY ERRORS, THE OCCUPATIONAL SAFETY AND HEALTH ACT AND THE CONSTRUCTION SAFETY ACT SHALL BE MET.
4. IT IS THE RESPONSIBILITY OF THE CONTRACTOR TO OBTAIN PERMITS NECESSARY TO PERFORM THE WORK SHOWN IN THESE PLANS FROM THE APPROPRIATE AGENCIES.
5. THE CONTRACTOR SHALL TAKE EFFECTIVE ACTION TO PREVENT THE FORMATION OF AN AIRBORNE DUST NUISANCE AND SHALL BE RESPONSIBLE FOR ANY DAMAGE RESULTING FROM THEIR FAILURE TO DO SO.
6. THE CONTRACTOR MUST PROVIDE FOR SAFE ACCESSIBLE INGRESS AND EGRESS FOR ADJACENT PROPERTY OWNERS AND EVA THROUGHOUT THE PERIOD OF CONSTRUCTION . TEMPORARY THROUGH ACCESS FOR THE GENERAL PUBLIC DUE TO CONSTRUCTION STAGING OR LIMITATIONS MUST BE FULLY REVIEWED AND APPROVED BY THE OWNER PRIOR TO IMPLEMENTATION. ALL ACCESS MUST BE SAFE, SECURED, FLAGGED, SIGNED, AND ACCESSIBLE PER THE APPROVED SITE ACCESS PLAN SUBMITTED BY THE CONTRACTOR AND REQUIRED BY THE OWNER.
7. DURING CONSTRUCTION, THE CONTRACTOR SHALL BE RESPONSIBLE FOR EMERGENCY VEHICLE ACCESS, PUBLIC SAFETY AND SAFETY OF EXISTING STRUCTURES. THE CONTRACTOR SHALL PROVIDE ALL LIGHTS, SIGNS, FENCING, BARRICADES, TRAFFIC CONTROLS, FLAGGERS , SHORINGS, BRACING AND GUYS OR OTHER DEVICES NECESSARY TO PROVIDE FOR SAFETY IN ACCORDANCE WITH ALL NATIONAL, STATE SPECS AND LOCAL SAFETY ORDINANCES.
8. THE CONTRACTOR SHALL POST EMERGENCY TELEPHONE NUMBERS FOR POLICE, FIRE, AMBULANCE, AND THOSE AGENCIES RESPONSIBLE FOR MAINTENANCE OF UTILITIES IN THE VICINITY OF JOB SITE.
9. ALL EXISTING UTILITIES AND IMPROVEMENTS ARE SHOWN IN THEIR APPROXIMATE LOCATIONS BASED UPON RECORD INFORMATION AVAILABLE TO THE ENGINEER AT THE TIME OF PREPARATION OF THESE PLANS. LOCATIONS MAY NOT HAVE BEEN VERIFIED IN THE FIELD AND NO GUARANTEE IS MADE AS TO THE ACCURACY OR COMPLETENESS OF THE INFORMATION SHOWN. THE CONTRACTOR SHALL NOTIFY UTILITY COMPANIES AT LEAST THREE (3) WORKING DAYS IN ADVANCE OF CONSTRUCTION TO FIELD LOCATE UTILITIES. CALL UNDERGROUND SERVICE ALERT (U.S.A.), AT 800-227-2600. IT SHALL BE THE RESPONSIBILITY OF THE CONTRACTOR TO DETERMINE THE EXISTENCE AND LOCATION OF THOSE UTILITIES SHOWN ON THESE PLANS OR INDICATED IN THE FIELD BY LOCATING SERVICES. ADDITIONAL COSTS INCURRED AS A RESULT OF CONTRACTOR'S FAILURE TO VERIFY LOCATIONS OF EXISTING UTILITIES PRIOR TO BEGINNING OF CONSTRUCTION IN THEIR VICINITY SHALL BE BORNE BY THE CONTRACTOR AND ASSUMED INCLUDED AND MERGED IN THE CONTRACT UNIT PRICE.
10. ALL EXISTING UTILITIES AND IMPROVEMENTS THAT BECOME DAMAGED DURING CONSTRUCTION MUST BE COMPLETELY RESTORED TO THE SATISFACTION OF THE CITY ENGINEER OR UTILITY AGENCY REPRESENTATIVE, AT THE CONTRACTOR'S SOLE EXPENSE.
11. ANY RELOCATION OF PUBLIC UTILITIES SHALL BE CONDUCTED IN ACCORDANCE WITH ANY AND ALL REQUIREMENTS OF THE UTILITY COMPANY REPRESENTATIVE INCLUDING FEES, BONDS, PERMITS AND WORKING CONDITIONS, ETC. THIS WORK SHALL BE DONE AT NO EXPENSE TO THE UTILITY COMPANY. THE OWNER SHALL PAY THE COST OF ALL SUCH RELOCATION WORK INCLUDING FEES, BONDS, PERMITS, ETC.
12. THE CONSTRUCTION OF ALL GRAVITY UNDERGROUND LINES (STORM DRAINS) SHALL BEGIN AT THE MOST DOWNSTREAM END, UNLESS OTHERWISE SPECIFICALLY APPROVED BY ENGINEER OR BY THE OWNER.
13. IF ARCHEOLOGICAL MATERIALS ARE UNCOVERED DURING GRADING, TRENCHING OR OTHER EXCAVATION, EARTHWORK WITHIN 50 FEET OF THESE MATERIALS SHALL BE STOPPED UNTIL A PROFESSIONAL ARCHAEOLOGIST WHO IS CERTIFIED BY THE SOCIETY OF CALIFORNIA ARCHAEOLOGY (SCA) AND/OR THE SOCIETY OF PROFESSIONAL ARCHAEOLOGY (SOPA) HAS HAD AN OPPORTUNITY TO EVALUATE THE SIGNIFICANCE OF THE FIND AND SUGGEST APPROPRIATE MITIGATION MEASURES, IF THEY ARE DEEMED NECESSARY.
14. THE USE OR INSTALLATION OF ANY MATERIAL OR EQUIPMENT WHICH IS MADE FROM, OR WHICH CONTAINS ASBESTOS FOR USE IN THE CONSTRUCTION OF THESE IMPROVEMENTS, IS NEITHER SPECIFIED NOR RECOMMENDED. ANY PARTY INSTALLING OR USING ANY PARTY SUCH MATERIALS OR EQUIPMENT SHALL BE SOLELY RESPONSIBLE FOR ALL INJURIES, DAMAGES, OR LIABILITIES OF ANY KIND, CAUSED BY THE USE OF SUCH MATERIALS OR EQUIPMENT.
15. THE CONTRACTOR MUST MEET AND IMPLEMENT ALL NPDES, SWPPP, AND EROSION CONTROL REQUIREMENTS IN EFFECT AT THE TIME OF CONSTRUCTION.
16. SHOULD IT APPEAR THAT THE WORK TO BE DONE OR ANY MATTER RELATIVE THERETO IS NOT SUFFICIENTLY DETAILED OR EXPLAINED ON THESE PLANS, THE CONTRACTOR SHALL CONTACT GATES & ASSOCIATES AT (925) 736-8176 FOR SUCH FURTHER EXPLANATIONS AS MAY BE NECESSARY.

PAVING SCHEDULE

KEY	DESCRIPTION	COLOR	FINISH	MFG/SUPPLIER	PATTERN	THICKNESS	DETAIL
1	PEDESTRIAN CONCRETE PAVING	STANDARD GREY	MEDIUM BROOM	DAYTON SUPERIOR	PER PLANS	4"	4/L4-02
2	CONCRETE MOWBAND	STANDARD GRAY	MEDIUM BROOM	--	--	SEE DETAIL	2/L4-02
3	DECOMPOSED GRANITE PAVING	CALIFORNIA GOLD	PER MFR	--	--	SEE DETAIL	5/L4-02

LAYOUT NOTES

1. CONTRACTOR SHALL VERIFY ALL UTILITIES, GRADES, EXISTING CONDITIONS AND DIMENSIONS IN THE FIELD PRIOR TO COMMENCING WORK. ALL DISCREPANCIES OR QUESTIONS SHALL BE BROUGHT TO THE ATTENTION OF THE LANDSCAPE ARCHITECT FOR RESOLUTION.
2. ALL WRITTEN DIMENSIONS SUPERSEDE ALL SCALED DISTANCES AND DIMENSIONS. DIMENSIONS SHOWN ARE FROM THE FACE OF THE BUILDING, WALL, FACE OF CURB, EDGE OF WALK, PROPERTY LINE, OR CENTERLINE OF COLUMN UNLESS OTHERWISE NOTED ON THE DRAWINGS.
3. ALL DIMENSIONS AT BUILDING ARE TO FACE OF BUILDING. ALL DIMENSIONS AT ROADWAY ARE TO FACE OF CURB.
4. ALL ANGLES ARE 45 DEGREE, 90 DEGREE, OR 135 DEGREE UNLESS OTHERWISE NOTED.
5. ALL CURVES AND ALL TRANSITIONS BETWEEN CURVES AND STRAIGHT EDGES SHALL BE SMOOTH.
6. ALL RETURN RADII AND CURB DATA ARE TO FACE OF CURB.
7. WHENEVER BOTTOM OF WALL (BW) ELEVATION IS GIVEN, IT IS FINISH PAVEMENT OR GRADE ELEVATION AT FACE OF WALL.
8. SCORE LINES IN SIDEWALKS SHALL BE SPACED TO EQUAL THE WIDTH OF THE WALKWAY, UNLESS OTHERWISE SHOWN. EXPANSION JOINTS IN SIDEWALKS SHALL BE 20' ON CENTER MAXIMUM.
9. EXPANSION JOINTS IN CONCRETE WALLS SHALL BE AT 40' O.C. MAXIMUM.
10. BUILDING LAYOUT AND LOCATION, SIDEWALK, CURB AND GUTTER, GRADING AND DRAINAGE IS BASED ON DRAWINGS PREPARED BY THE ARCHITECT AND THE CIVIL ENGINEER.
11. STATIONING HEREON IS ALONG CONSTRUCTION CENTERLINE UNLESS OTHERWISE SHOWN OR INDICATED.
12. ANY EXTRA CONSTRUCTION STAKING NECESSITATED SOLELY BY THE CONTRACTOR'S NEGLIGENCE WILL BE CHARGED TO THE CONTRACTOR ON A TIME AND EXPENSES BASIS AND PAID FOR BY THE CONTRACTOR.
13. SEE IRRIGATION DRAWINGS FOR GENERAL SYSTEM REQUIREMENTS AND FOR LOCATION OF IRRIGATION MAINLINE PIPING. SLEEVES TO ACCOMMODATE IRRIGATION PIPING, SIZED AS NEEDED, SHALL BE IN PLACE UNDER AND THROUGH SLABS AND WALLS, PRIOR TO POURING.
14. PROVIDE CONTINUOUS HEADERS AT THE EDGES OF ALL AC PAVING, SHRUB AREAS, LAWN AREAS, DECOMPOSED GRANITE WHERE IT IS NOT CONSTRAINED BY A CONCRETE PAVING OR MOW BAND.
15. ALL CONCRETE PAVEMENTS SHALL BE DOWELED INTO CURBS AND BUILDING FOUNDATIONS
16. REFER TO GEOTECHNICAL REPORT FOR ADDITIONAL INFORMATION, SECTIONS, REINFORCEMENT, AND PREPARATION. IN CASE OF DISCREPANCY THE GEOTECHNICAL REPORT SHALL GOVERN.
17. ALL TYPICAL DETAILS SHALL APPLY UNLESS NOTED OTHERWISE
18. ANY AND ALL WORK WITHIN CITY RIGHT OF WAY SHALL CONFORM TO ALL CITY STANDARD DETAILS AND SPECIFICATIONS.
19. CONCRETE FOOTINGS INSTALLED FOR ALL SITE FURNISHINGS, SPORTS EQUIPMENT, ETC.. IN DECORATIVE PAVEMENT, ASPHALT PAVING, DECOMPOSED GRANITE, CONCRETE PAVING, AND PLANTERS SHALL BE HELD BELOW GRADE.
20. ALL EXISTING ITEMS TO REMAIN SHALL BE PROTECTED AS REQUIRED. ANY DAMAGED ITEMS SHALL BE FULLY REPAIRED OR REPLACED AT THE CONTRACTOR'S EXPENSE TO THE FULL SATISFACTION OF THE OWNER.
21. CONTRACTOR SHALL BE RESPONSIBLE FOR ANY COORDINATION WITH SUBCONTRACTORS AS REQUIRED TO ACCOMPLISH OPERATIONS.
22. ALL QUANTITIES AND PAY ITEMS ARE AND WILL BE BASED ON HORIZONTAL MEASUREMENTS.
23. ALL PATTERNS, LINE TYPES, AND SYMBOLS SHOWN WITHIN THE PLAN SET REFERENCE THE LAYOUT LEGEND AND ARE PART OF THE SCOPE OF WORK. CALLOUTS ARE SHOWN FOR CLARIFICATION OF WORK, BUT DO NOT INDICATE EVERY AND ALL INSTANCES OF SUCH WORK. THE CONTRACTOR SHALL REQUEST CLARIFICATION TO ANY ITEMS (INCLUDING BUT NOT LIMITED TO PAVING, WALLS, FINISHES, COLORS, FENCING, FOUNTAINS, POTS, AND SITE FURNITURE) NOT CLEARLY IDENTIFIED TO BE PART OF THE SCOPE OF WORK PRIOR TO BID.
24. SEE ELECTRICAL ENGINEER'S PLANS AND LIGHTING PLAN FOR ADDITIONAL INFORMATION.
25. SEE CIVIL ENGINEER'S PLANS FOR ADDITIONAL INFORMATION.

ABBREVIATIONS

S.C.D.	SEE CIVIL DRAWINGS	℄	CENTER LINE
S.A.D.	SEE ARCHITECTURAL DRAWINGS	⅊	PROPERTY LINE
S.E.D.	SEE ELECTRICAL DRAWINGS	ES	EQUAL SPACES
TYP.	TYPICAL	O.C.	ON CENTER
TBD	TO BE DETERMINED	E.W.	EACH WAY
SP	SPACING	R	RADIUS
⌖	POINT OF BEGINNING	SQ	SQUARE
℄	CENTERLINE TEXT	CMU	CONCRETE MASONRY UNIT
EQ.	EQUAL	ROW	RIGHT OF WAY
L.O.W.	LIMIT OF WORK	JT	JOINT TRENCH
SIM	SIMILAR	STD	STANDARD
↶	ALIGN		

LAYOUT LEGEND

- CONCRETE PAVING SCORING
- STREET LIGHT, S.C.D.
- BOLLARD LIGHT, S.C.D.
- PEDESTRIAN FOOTBRIDGE
- BOULDERS
- MASONRY WALL
- 6' GOOD NEIGHBOR FENCE
- 6' FENCE

SHEET LIST TABLE

SHEET LIST TABLE	
SHEET NUMBER	SHEET TITLE
L0-01	COVER SHEET
L0-02	PLANTING NOTES AND LEGEND
L1-01	LAYOUT PLAN
L1-02	LAYOUT PLAN
L1-03	LAYOUT PLAN
L1-04	LAYOUT PLAN
L1-05	LAYOUT PLAN
L1-06	LAYOUT PLAN
L1-07	LAYOUT PLAN
L1-08	LAYOUT PLAN
L1-09	LAYOUT PLAN
L2-01	IRRIGATION PLAN
L2-02	IRRIGATION PLAN
L2-03	IRRIGATION PLAN
L2-04	IRRIGATION PLAN
L2-05	IRRIGATION PLAN
L2-06	IRRIGATION PLAN
L2-07	IRRIGATION PLAN
L2-08	IRRIGATION PLAN
L2-09	IRRIGATION NOTES AND LEGEND
L2-10	IRRIGATION DETAILS
L2-11	IRRIGATION DETAILS
L2-12	IRRIGATION DETAILS
L2-13	WATER USE CALCULATIONS
L3-01	PLANTING PLAN
L3-02	PLANTING PLAN
L3-03	PLANTING PLAN
L3-04	PLANTING PLAN
L3-05	PLANTING PLAN
L3-06	PLANTING PLAN
L3-07	PLANTING PLAN
L3-08	PLANTING PLAN
L3-09	PLANTING PLAN
L4-01	LANDSCAPE DETAILS
L4-02	LANDSCAPE DETAILS
L4-03	LANDSCAPE DETAILS

CITY OF MORGAN HILL

PLAN APPROVED

THIS PLAN WAS APPROVED BY THE PLANNING DIVISION

ON January 24, 2022

SR2021-0011 Cochrane-Toll Brothers (Borello Ranch)

FILE NUMBER

Gina Paolini

PLANNING OFFICIAL

LANDSCAPE SHEET MAP INDEX

GATES +ASSOCIATES
LANDSCAPE ARCHITECTURE
LAND PLANNING · URBAN DESIGN
1655 N. MAIN ST. STE 365, WALNUT CREEK, CA 94596
T 925.736.8176 www.dgates.com

BORELLO RANCH BACKBONE PHASE 3

MORGAN HILL CALIFORNIA

Toll Brothers

ISSUE:	DESCRIPTION:	DATE:

REGISTERED LANDSCAPE ARCHITECT — CHRISTOPHER A. CASE — 5/30/2022 — 11/08/2021 — L.A. — STATE OF CALIFORNIA

PROJECT NUMBER:	5250
DRAWN:	JG, GH
CHECK:	RC
DATE:	11/08/2021
SCALE:	

0 1/2" 1" 2"

COVER SHEET

L0-01

© GATES+ASSOCIATES, INC. | 2017

PATH: P:\MORGAN HILL\BORELLO (5250)\ACAD\BORELLO BACKBONE - PHASE 3\SHEETS_DG-C-5250-BACKBONE PHASE 3.DWG
PLOT DATE: 11/17/2021 1:03 PM

PLANTING NOTES

GENERAL

1. ALL WORK SHALL BE PERFORMED BY PERSONS FAMILIAR WITH PLANTING WORK AND UNDER THE SUPERVISION OF A QUALIFIED PLANTING FOREMAN.

2. ALL QUANTITIES AND PLANT COUNTS ARE FOR THE CONVENIENCE OF THE CONTRACTOR. IN CASE OF DISCREPANCIES, THE PLAN SHALL GOVERN.

3. THE LANDSCAPE ARCHITECT RESERVES THE RIGHT TO MAKE SUBSTITUTIONS, ADDITIONS, AND DELETIONS IN THE PLANTING SCHEME AS THEY FEEL NECESSARY WHILE WORK IS IN PROGRESS, UPON APPROVAL BY THE OWNER. SUCH CHANGES ARE TO BE ACCOMPANIED BY EQUITABLE ADJUSTMENTS IN THE CONTRACT PRICE, WHEN NECESSARY.

4. PLANT MATERIAL LOCATIONS SHOWN ARE DIAGRAMMATIC AND MAY BE SUBJECT TO CHANGE IN THE FIELD BY THE LANDSCAPE ARCHITECT. PLANT LOCATIONS ARE TO BE ADJUSTED IN THE FIELD AS NECESSARY TO SCREEN UTILITIES, BUT SHALL NOT BLOCK WINDOWS, BLOCK SIGNS NOR IMPEDE ACCESS.

5. THE DESIGN INTENT OF THE PLANTING PLAN IS TO ESTABLISH AN ATTRACTIVE MATURE LANDSCAPE APPEARANCE. FUTURE PLANT GROWTH WILL NECESSITATE TRIMMING, SHAPING, AND IN SOME CASE REMOVAL OF TREES AND SHRUBS AS AN ON-GOING MAINTENANCE PROCEDURE.

6. ALL PLANTING AREA MUST BE IRRIGATED WITH AUTOMATIC IRRIGATION SYSTEM. IRRIGATION SYSTEM SHALL BE FULLY AUTOMATED AND OPERATIONAL WITH FULL COVERAGE PRIOR TO PLANTING.

7. CONTRACTOR TO REVIEW ALL EXISTING, PROPOSED, & AS BUILT UTILITY PLANS PRIOR TO CONSTRUCTION. CONTRACTOR TO TAKE PRECAUTIONS IN EXCAVATION OF ALL TREE PLANTING PITS. CONTRACTOR TO NOTIFY LANDSCAPE ARCHITECT OF ANY CONFLICTS FOUND DURING CONSTRUCTION.

8. CONTRACTOR MUST REVIEW ALL PLANS PRIOR TO THE BEGINNING OF CONSTRUCTION AND MAINTAIN THE FOLLOWING CLEARANCES FOR ALL TREE PLANTINGS. CONTRACTOR TO TAKE PRECAUTION IN ALL EXCAVATION ACTIVITY. NOTIFY LANDSCAPE ARCHITECT OF ANY CONFLICTS PRIOR TO INSTALLATION.
   - FIRE HYDRANTS AND PIVS: 3' MINIMUM
   - LIGHT POLES: 10' MINIMUM
   - UTILITIES: 3' MINIMUM
   - BUILDING ROOF EDGE: 5' MINIMUM

9. CONTRACTOR TO PROVIDE AND ARRANGE FOR PLANT MATERIAL THRU CONTRACT GROW, PLANT BROKERS, OR DIRECT PURCHASE AS REQUIRED FOR THE FULL IMPLEMENTATION OF THE PROJECTS PLANTING PLAN. CONTRACTOR MUST SUBMIT WITHIN 30 DAYS AFTER AWARD OF A BID A DETAILED NURSERY LIST OF SECURED PLANT MATERIAL, CONTRACT GROW PLANT MATERIAL, AND ANY SUBSTITUTION REQUESTS. CONTRACTOR SHALL ARRANGE AND SECURE ALL PLANT MATERIAL WITHIN 30 DAYS OF BID. UPON DELIVERY, PLANT MATERIAL THAT DOES NOT MEET NURSERY STANDARDS, IS ROOTBOUND, OF POOR QUALITY & HEALTH, SUBSTANDARD SIZE, AND / OR IS NOT APPROVED BY THE LANDSCAPE ARCHITECT SHALL BE REPLACED AT THE CONTRACTOR'S EXPENSE. MATERIAL WHICH IS NOT SECURED AND IS UNAVAILABLE IN THE SIZE SPECIFIED SHALL BE UP-SIZED, IF AVAILABLE. ALL REPLACEMENT MATERIAL, SUBSTITUTIONS OR UP-SIZED PLANT MATERIAL MUST BE PROVIDED AS REQUIRED FOR THE FULL IMPLEMENTATION OF THE PLANTING PLAN AT NO ADDITIONAL COST TO THE CONTRACT AND OWNER.

10. PROCUREMENT OF PLANT MATERIAL SHALL NOT BE LIMITED TO NORTHERN CALIFORNIA. CONTRACTOR SHALL BE RESPONSIBLE FOR ALL TRUCKING, INSPECTIONS, AND INCIDENTALS FOR PROVIDING PLANT MATERIAL FROM SOURCES OUT OF STATE AS REQUIRED BY THE PROJECT PLANTING PLAN.

EXISTING PLANT MATERIAL

1. ALL EXISTING PLANT MATERIAL, TREES, OR LAWN TO REMAIN MUST BE PROTECTED AND MAINTAINED IN PLACE BY THE CONTRACTOR.

2. ANY DAMAGED MATERIAL MUST BE FULLY REPLACED TO MATCH EXISTING BY THE CONTRACTOR AT NO ADDITIONAL COST TO THE CONTRACT AND OWNER.

3. CONTRACTOR MUST MAINTAIN ANY EXISTING IRRIGATION SYSTEMS OR PROVIDE TEMPORARY IRRIGATION SYSTEMS AS REQUIRED TO ALL EXISTING PLANTING AREAS TO REMAIN.

SOILS

1. THE CONTRACTOR MUST PROVIDE AN AGRICULTURAL SUITABILITIES ANALYSIS FOR ALL SOILS EXISTING AND IMPORTED INCLUDING BUT NOT LIMITED TO: EXISTING ON-SITE SOILS, IMPORTED TOPSOIL, LIME TREATED AREAS, AND ALL AMMENDMENTS. RECOMMENDATIONS FOR AMENDMENTS CONTAINED IN THIS ANALYSIS ARE TO BE CARRIED OUT BEFORE PLANTING OCCURS. PROVIDE 2 TESTS AT 6" DEPTH AND 2 TESTS AT 24" DEPTH THROUGHOUT THE SITE. PROVIDE ADDITIONAL TESTING (ONE 6" AND ONE 24" DEPTH TEST PER 25,000 SF FOR AREAS WHICH WERE LIME TREATED). EACH TEST SAMPLE SHALL CONTAIN 3 REPRESENTATIVE SOIL SAMPLES. ALL LIME TREATED PLANTING AREAS SHALL BE REMOVED AND REPLACED WITH IMPORT TOP SOIL AT NO COST TO THE OWNER. ALL TESTING SHALL BE PAID FOR BY THE CONTRACTOR. FOR BID PURPOSES AMEND ALL SOIL WITH 6 YARDS OMRI COMPOST 50LBS GYPSUM AND 100LBS OF GRO-POWER PLUS 5-3-1 W/ M PER 1000SF. CONTRACTOR TO SUBMIT ALL DELIVERY TICKETS FOR COMPOST AND FERTILIZERS FOR VERIFICATION.

2. ALL SOILS IMPORTED ONTO THE SITE FOR ANY PURPOSE SUCH AS GRADING, NON EXPANSIVE FILL, FILL, OR FOR ANY GENERAL PURPOSE MUST BE TESTED FOR PLANT SUITABILITY PRIOR TO PLACEMENT. ALL IMPORT SOILS SHALL BE NON-DETRIMENTAL TO PLANT MATERIAL AND SOILS ANALYSIS SUBMITTED TO THE LANDSCAPE ARCHITECT FOR REVIEW AND APPROVAL. PROVIDE 1 TEST PER 500 CY OF MATERIAL.

3. SOIL IS TO BE AMENDED, AT THE RATE INDICATED BY THE SOIL ANALYSIS, TO BRING THE SOIL ORGANIC MATTER CONTENT TO A MINIMUM OF 3.5% BY DRY WEIGHT, AND A MINIMUM OF 2" OF QUALITY RECYCLED COMPOST, ON ALL PLANTING AREAS.

4. ALL PLANTERS IN AREAS WHICH HAVE BEEN COMPACTED, SUCH AS ADJACENT TO BUILDINGS AND IN PARKING LOTS, SHALL BE CROSS RIPPED TO THE FOLLOWING DEPTHS: PLANTERS LESS THAN THREE (3) FEET WIDE SHALL HAVE COMPACTION RELIEVED TO A MINIMUM DEPTH OF TWENTY-FOUR (24) INCHES BELOW SUBGRADE. PLANTERS THREE TO TEN (3-10) FEET WIDE MUST HAVE COMPACTION RELIEVED TO A MINIMUM DEPTH OF 18" BELOW SUBGRADE, PLANTERS MORE THAN 10' WIDE SHALL HAVE COMPACTION RELIEVED TO A MINIMUM DEPTH OF 12" BELOW SUBGRADE. AREAS SHALL BE PROTECTED AFTER DECOMPACTION.

5. CONTRACTOR SHALL PERFORM A PERCOLATION TEST AT THE BEGINNING OF CONSTRUCTION AT 1 LOCATION PER ACRE (MAX OF 4) TO DETERMINE THE DRAINAGE CAPACITY OF THE EXISTING SITE SOIL FOR TREE HEALTH. NOTIFY THE LANDSCAPE ARCHITECT IF DRAINAGE IS LESS THAN 2" PER HOUR.

TREES

1. ALL TREES SHALL BE STANDARDS UNLESS SPECIFICALLY NOTED.

2. ALL TREES ARE TO BE STAKED AS SHOWN ON THE TREE STAKING/GUYING DIAGRAMS. BRANCHING HEIGHT OF TREES SHALL BE A 6'-0" MINIMUM ABOVE FINISH GRADE. ALL TREES IN A FORMAL GROUP PLANTING MUST BE MATCHING IN SIZE AND SHAPE. ALL STREET TREES TO BE INSTALLED IN ACCORDANCE WITH THE STANDARDS AND SPECIFICATIONS OF THE OWNER. LANDSCAPE ARCHITECT SHALL BE CONSULTED REGARDING ORIENTATION OF TREES PRIOR TO PLANTING AND/OR BACKFILLING.

3. PLANT TREES 3'-0" MINIMUM FROM FACE OF CURB AT PARKING, AND FROM EDGES OF PAVING. ALL TREES WITHIN 5' OF PAVING AREAS AND BUILDINGS MUST HAVE ROOT BARRIERS INSTALLED. SEE ROOT BARRIER DETAIL. DEEP ROOT BARRIER MODEL NO. UB.24.2. (415) 344-1464. INSTALL PER MANUFACTURER'S SPECIFICATIONS. WHERE WATER BARRIERS AND ROOT BARRIERS ARE REQUIRED, USE CENTURY PRODUCTS DUAL PURPOSE WATER/ ROOT BARRIER CR-PE24-20, (714)632-7083, S.C.D. FOR LOCATIONS OF WATER BARRIER.

4. PROVIDE 4" BERM AROUND TREE FOR WATER BASIN. SEE TREE STAKING DETAIL. BERM TO BE REMOVED IN LAWN AREA AFTER INITIAL MAINTENANCE PERIOD. MULCH TREE WELL WITH 3" LAYER OF RECYCLED CHIPPED MULCH. KEEP MULCH AWAY FROM TREE TRUNK. HOLD LAWN AND HYDROSEED 2' CLEAR FROM TRUNKS, TYP.

5. TREES MUST HAVE AN UNCUT LEADER THAT HAS A UNIFORM TAPER FROM BASE TO TIP. TREES MUST MEET AT LEAST NORMAL CALIPER AND HEIGHT FOR CONTAINER SIZE. OVERGROWN OR ROOT BOUND TREES ARE NOT ACCEPTABLE.

6. FOR ALL TREES IN STORMWATER INFILTRATION ZONES HOLD FG OF ROOTBALL 4" ABOVE FG OF FLOWLINE. ADJUST ADJACENT GRADE OF SOIL TO BLEND UNIFORMLY AROUND ROOTBALL AND ALLOW UNIMPEDED FLOW OF WATER.

PLANTING NOTES (CONT)

SHRUBS, GROUNDCOVERS AND VINES

1. GROUNDCOVER MUST BE PLANTED AS SHOWN ON THE PLAN, INCLUDING UNDER SHRUBS AND IN TREE WATERING BASINS.

2. SHRUBS AND PERENNIALS MUST HAVE ADEQUATE SETBACK FROM THE ADJACENT SIDEWALK AND EDGES OF PARKING LOT CURBS. NOTIFY LANDSCAPE ARCHITECT PRIOR TO INSTALLATION IF PLANT MATERIAL MAY PROTRUDE INTO THE PATH OF TRAVEL.

3. THE CONTRACTOR IS TO SECURE ALL VINES TO TRELLISES WITH APPROVED FASTENERS, ALLOWING FOR TWO (2) YEARS GROWTH. SUBMIT SAMPLE TO LANDSCAPE ARCHITECT.

HYDROSEED

1. ALL DISTURBED AREAS WITH NO PLANTING, MULCH, HARDSCAPE OR OTHER MEANS OF EROSION CONTROL SHALL HAVE HYDROSEED PLACED.

2. ALL HYDROSEED SHALL BE FULLY ROOTED AND ESTABLISHED PRIOR TO OCTOBER 15TH.

3. THE CONTRACTOR SHALL PROVIDE TEMPORARY IRRIGATION AS REQUIRED TO ESTABLISH ALL 'NON-IRRIGATED' HYDROSEED WITHIN FLOW CHANNELS, RETENTION BASINS, DETENTION BASINS, OR OTHER AREAS SUBJECT TO WATER FLOW.

ACCESSORIES

1. ALL PLANTING NOT BOUNDED BY CONCRETE OR A HARDSCAPE EDGE SHALL BE COMPLETELY SURROUNDED BY HEADERS. ALL ASPHALT AND DECOMPOSED GRANITE AREAS TO BE COMPLETELY SURROUNDED BY HEADERS OR ADJACENT CONCRETE WORK.

2. ALL PLANTING AREAS MUST BE TOP-DRESSED WITH 3" LAYER OF RECYCLED CHIPPED MULCH. COLOR: BROWN. SUBMIT SAMPLE TO LANDSCAPE ARCHITECT FOR APPROVAL PRIOR TO ORDERING.

3. ALL MULCH WITHIN STORMWATER PLANTING AREAS MUST BE 3" OF WASHED PEA GRAVEL. SUBMIT SAMPLE FOR REVIEW AND APPROVAL.

4. ALL STORMWATER CURB CUTS MUST BE REINFORCED WITH A MINIMUM 12" WIDE x18" LONG x 6" DEEP BAND OF COBBLE. COBBLE SHALL BE 40% 4"-6" AND 60% 2"-3" NOIYO COBBLE. PROVIDE 24" WIDE BY 6" DEPTH OF COBBLE AROUND ALL CATCH BASINS LOCATED IN DRAINAGE AREAS. SUBMIT SAMPLE FOR REVIEW AND APPROVAL

5. ALL RAINWATER LEADERS DISCHARGING INTO LANDSCAPE AREAS MUST HAVE SPLASH BLOCKS. MODEL: CDI 16X24". COLOR: TO MATCH PAVING. (800) 279-2278.

6. ALL SLOPES GREATER THAN 2.5:1 MUST BE COVERED WITH EROSION CONTROL NETTING PER THE MANUFACTURER'S SPECIFICATIONS. OVERLAP ALL EDGES A MINIMUM OF 12" AND SECURE AS REQUIRED WITH METAL STAPLES. EROSION CONTROL NETTING TO BE WESTERN EXCELSIOR, EXCEL CS-3 OR APPROVED EQUAL. AVAILABLE FROM REED & GRAHAM 888-381-0800.

7. THE LANDSCAPE CONTRACTOR SHALL AS A PART OF THIS BID PROVIDE FOR A PLANTING ALLOWANCE FOR THE AMOUNT OF $3,000.00 (THREE THOUSAND DOLLARS), TO BE USED FOR SUPPLYING AND INSTALLING ADDITIONAL PLANT MATERIAL AS DIRECTED BY THE LANDSCAPE ARCHITECT AND APPROVED BY THE OWNER IN WRITING. THE UNUSED PORTION OF THE ALLOWANCE SHALL BE RETURNED TO THE OWNER AT THE BEGINNING OF THE MAINTENANCE PERIOD.

8. SEE SPECIFICATIONS FOR ALL FERTILIZER REQUIREMENTS

SUBMITTALS

1. CONTRACTOR MUST SUBMIT ALL TESTS, PRODUCTS, ACCESSORIES, CUT SHEETS OF ALL ITEMS SPECIFIED FOR REVIEW AND APPROVAL PRIOR TO INSTALLATION.

2. ALL PLANT MATERIAL MUST BE REVIEWED AND APPROVED BY THE LANDSCAPE ARCHITECT PRIOR TO DELIVERY. CONTRACTOR SHALL SUBMIT PHOTOS OF ALL SHRUBS, GROUND COVERS, VINES, AND TREES FOR PRELIMINARY REVIEW AND APPROVAL.

3. PLANT MATERIAL NOT APPROVED BY THE LANDSCAPE ARCHITECT MAY BE SUBJECT TO REMOVAL AND REPLACEMENT WITH APPROVED PLANT MATERIAL AT NO ADDITIONAL COST TO THE CONTRACT OR OWNER.

PLANTING LEGEND

XXX / XX — TREE NAME / QUANTITY

XX / XX — SHRUB / GROUND COVER NAME / QUANTITY

SEE PLANT LIST FOR ADDT'L INFO.

LANDSCAPE SHEET MAP INDEX

PLANT SCHEDULE

TREES	CODE	BOTANICAL NAME	COMMON NAME	SIZE	WATER USE	SPACING	QTY
	ACE	ACER X FREEMANII `JEFFSRED`	AUTUMN BLAZE MAPLE	24"BOX	M	AS SHOWN	3
	LAM	LAGERSTROEMIA X `MUSKOGEE`	LAVENDER CRAPE MYRTLE	24"BOX	L	AS SHOWN	10
	OLA	OLEA EUROPAEA `FRUITLESS`	FRUITLESS OLIVE	24"BOX	L	AS SHOWN	23
	PLC	PLATANUS X ACERIFOLIA `COLUMBIA`	COLUMBIA LONDON PLANE TREE	24"BOX	M	AS SHOWN	18
	PRU	PRUNUS SERRULATA	JAPANESE FLOWERING CHERRY	24"BOX	M	AS SHOWN	18
	QUE	QUERCUS AGRIFOLIA	COAST LIVE OAK MULTI-TRUNK	36"BOX	VL	AS SHOWN	4
	QUL	QUERCUS LOBATA	VALLEY OAK	24"BOX	L	AS SHOWN	17
SHRUBS	CODE	BOTANICAL NAME	COMMON NAME	SIZE	WATER USE	SPACING	QTY
	CK	CALAMAGROSTIS X ACUTIFLORA `KARL FOERSTER`	FEATHER REED GRASS	1 GAL	M	24" O.C.	219
	CG	CEANOTHUS GRISEUS HORIZONTALIS `YANKEE POINT`	CALIFORNIA LILAC	1 GAL	L	72" O.C.	295
	CH	CHONDROPETALUM ELEPHANTINUM	LARGE CAPE RUSH	1 GAL	L	60" O.C.	316
	CT	CHONDROPETALUM TECTORUM	CAPE RUSH	1 GAL	L	42" O.C.	613
	CP	CORTADERIA SELLOANA `PUMILA`	DWARF PAMPAS GRASS	1 GAL	VL	48" O.C.	325
	DG	DIETES GRANDIFLORA	FORTNIGHT LILY	1 GAL	L	36" O.C.	2,544
	EH	EPILOBIUM CANUM	CALIFORNIA FUCHSIA	1 GAL	L	48" O.C.	165
	HP	HESPERALOE PARVIFLORA	RED YUCCA	1GAL	L	48" O.C.	629
	JP	JUNCUS PATENS	CALIFORNIA GRAY RUSH	1 GAL	L	24" O.C.	207
	LD	LEYMUS CONDENSATUS `CANYON PRINCE`	CANYON PRINCE GIANT WILD RYE	1GAL	L	42" O.C.	2,151
	LL	LOMANDRA LONGIFOLIA `BREEZE`	DWARF MAT RUSH	1 GAL	L	36" O.C.	1,509
	MA	MIMULUS AURANTIACUS	STICKY MONKEYFLOWER	1 GAL	L	42" O.C.	163
	MC	MUHLENBERGIA CAPILLARIS `REGAL MIST`	REGAL MIST PINK MUHLY GRASS	1 GAL	L	36" O.C.	332
	MR	MUHLENBERGIA RIGENS	DEER GRASS	1 GAL	L	48" O.C.	1,776
	RC	RHAPHIOLEPIS INDICA `CLARA`	CLARA INDIAN HAWTHORN	5 GAL	L	42" O.C.	155
	RH	ROSMARINUS OFFICINALIS `HUNTINGTON CARPET`	HUNTINGTON CARPET ROSEMARY	1 GAL	L	48" O.C.	60
	SA	SANTOLINA CHAMAECYPARISSUS	LAVENDER COTTON	5 GAL	L	42" O.C.	237
GROUND COVERS	CODE	BOTANICAL NAME	COMMON NAME	SIZE	WATER USE	SPACING	QTY
	AL	ACACIA REDOLENS `LOW BOY`	LOW BOY BANK CATCLAW	1 GAL	L	120" O.C.	54
	BP	BACCHARIS PILULARIS `TWIN PEAKS#2`	TWIN PEAKS #2 COYOTE BRUSH	1 GAL	L	60" O.C.	413
	BA	BOUTELOUA GRACILIS `BLONDE AMBITION`	BLUE GRAMA	FLAT	L	24" O.C.	733
	BT	BULBINE FRUTESCENS `TINY TANGERINE`	TINY TANGERINE BULBINE	1 GAL	L	48" O.C.	45
	CA	CAREX DIVULSA	BERKELEY SEDGE	FLAT	L	24" O.C.	252
	JC	JUNIPERUS CONFERTA `BLUE PACIFIC`	BLUE PACIFIC JUNIPER	1 GAL	L	60" O.C.	318
	LP	LANTANA MONTEVIDENSIS	TRAILING LANTANA	1 GAL	L	96" O.C.	16
	LA	LANTANA MONTEVIDENSIS `ALBA`	WHITE TRAILING LANTANA	1 GAL	L	48" O.C.	160
	TH	TURF HYDROSEED	BIOFILTRATION SOD ™	SOD	M		57,187 SF

GATES +ASSOCIATES
LANDSCAPE ARCHITECTURE
LAND PLANNING · URBAN DESIGN
1655 N. MAIN ST. STE 365, WALNUT CREEK, CA 94596
T 925.736.8176 www.dgates.com

BORELLO RANCH BACKBONE PHASE 3
MORGAN HILL CALIFORNIA

Toll Brothers

ISSUE:	DESCRIPTION:	DATE:

REGISTERED LANDSCAPE ARCHITECT · CASEY CASE · NO. 4893 · 6/30/2022 · Renewal Date · 11/08/2021 · Date · L.A. · STATE OF CALIFORNIA

PROJECT NUMBER:	5250
DRAWN:	JG, GH
CHECK:	RC
DATE:	11/08/2021
SCALE:	

0 1' 2' 4'

PLANTING NOTES AND LEGEND

L0-02

© GATES+ASSOCIATES, INC. | 2017

PATH: P:\MORGAN HILL\BORELLO (5250)\ACAD\BORELLO BACKBONE - PHASE 3\SHEETS_DG-C-5250-BACKBONE PHASE 3.DWG
PLOT DATE: 11/7/2021 10:37 AM

MATCHLINE - SEE SHEET L1-04

VIA SEBASTIAN

93

92

90

91

6' GOOD NEIGHBOR FENCE (2 / L4-03)

CONVEYANCE CHANNEL, TYP., S.C.D.

LANDSCAPE BOULDERS, TYP. (1 / L4-02)

PEDESTRIAN FOOT BRIDGE, TYP. (1 / L4-03)

NO PARK ZONE, TYP.

VIA SANTA ELENA

RETENTION BASIN S.C.D.

PARCEL C

PEET ROAD

MATCHLINE - SEE SHEET L1-02

LAYOUT LEGEND

- CONCRETE PAVING SCORING
- STREET LIGHT, S.C.D.
- BOLLARD LIGHT, S.C.D.
- PEDESTRIAN FOOTBRIDGE
- BOULDERS
- MASONRY WALL
- 6' GOOD NEIGHBOR FENCE
- 6' FENCE

LANDSCAPE KEY MAP

GATES +ASSOCIATES
LANDSCAPE ARCHITECTURE
LAND PLANNING · URBAN DESIGN
1655 N. MAIN ST. STE 365, WALNUT CREEK, CA 94596
T 925.736.8176 www.dgates.com

BORELLO RANCH BACKBONE PHASE 3

MORGAN HILL
CALIFORNIA

Toll Brothers

ISSUE:	DESCRIPTION:	DATE:

REGISTERED LANDSCAPE ARCHITECT
GREG CASE
6/30/2022
Date Exp.
11/08/2021
Date
L.A.
STATE OF CALIFORNIA

PROJECT NUMBER:	5250
DRAWN:	JG, GH
CHECK:	RC
DATE:	11/08/2021
SCALE:	1"=20'

0 10' 20' 40'

LAYOUT PLAN

L1-01

© GATES+ASSOCIATES, INC. | 2017

MATCHLINE - SEE SHEET L1-03

MATCHLINE - SEE SHEET L1-01

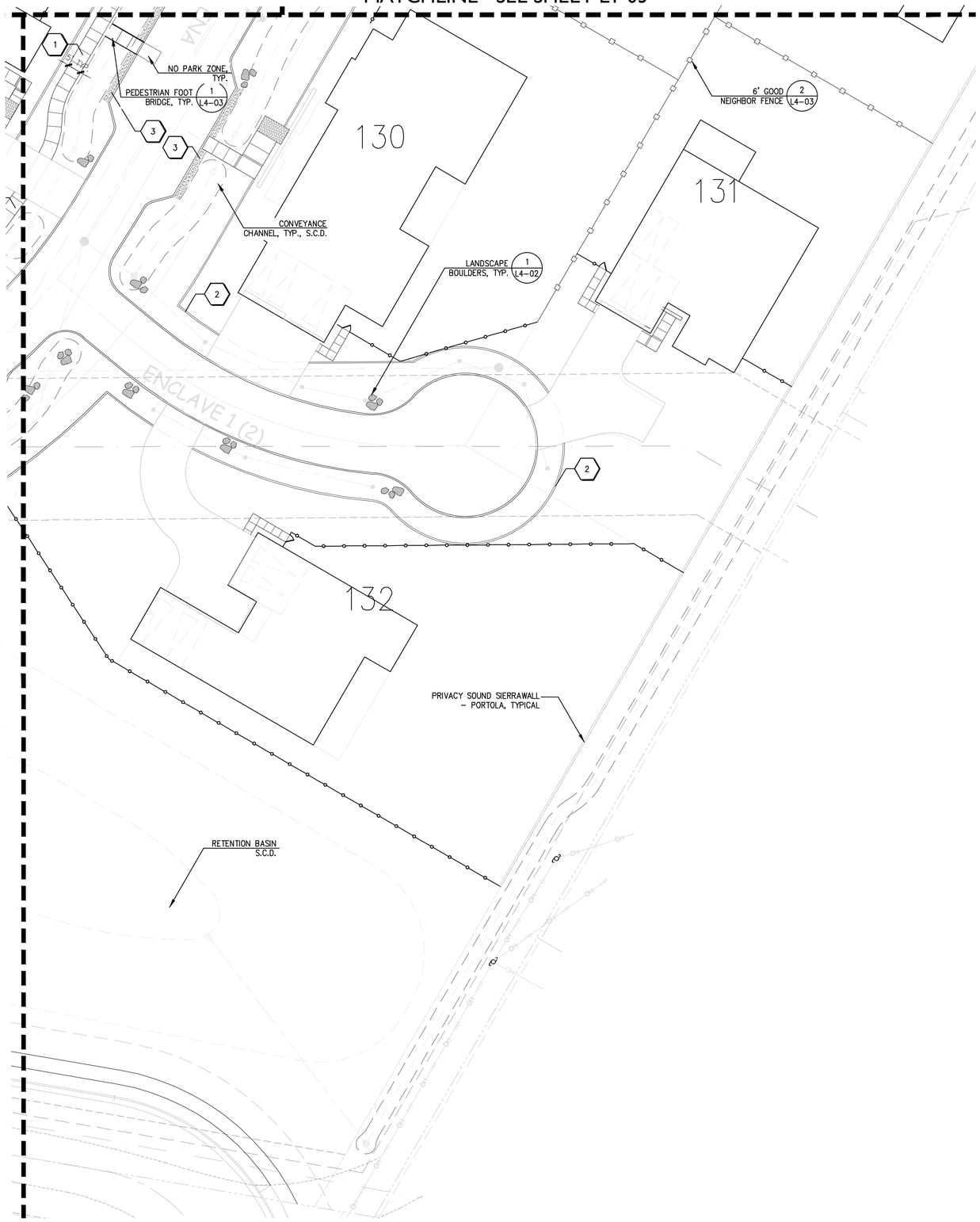

LAYOUT LEGEND

- CONCRETE PAVING SCORING
- STREET LIGHT, S.C.D.
- BOLLARD LIGHT, S.C.D.
- PEDESTRIAN FOOTBRIDGE
- BOULDERS
- MASONRY WALL
- 6' GOOD NEIGHBOR FENCE
- 6' FENCE

LANDSCAPE KEY MAP

GATES +ASSOCIATES
LANDSCAPE ARCHITECTURE
LAND PLANNING · URBAN DESIGN
1655 N. MAIN ST. STE 365, WALNUT CREEK, CA 94596
T 925.736.8176 www.dgates.com

BORELLO RANCH BACKBONE PHASE 3

MORGAN HILL
CALIFORNIA

Toll Brothers

ISSUE:	DESCRIPTION:	DATE:

REGISTERED LANDSCAPE ARCHITECT
CAREY CASE · No. 4055
6/30/2022
Renewal Date
11/08/2021
Date
L.A.
STATE OF CALIFORNIA

PROJECT NUMBER:	5250
DRAWN:	JG, GH
CHECK:	RC
DATE:	11/08/2021
SCALE:	

0 10' 20' 40'

LAYOUT PLAN

L1-02

© GATES+ASSOCIATES, INC. | 2017

MATCHLINE - SEE SHEET L1-05

MATCHLINE - SEE SHEET L1-06

MATCHLINE - SEE SHEET L1-04

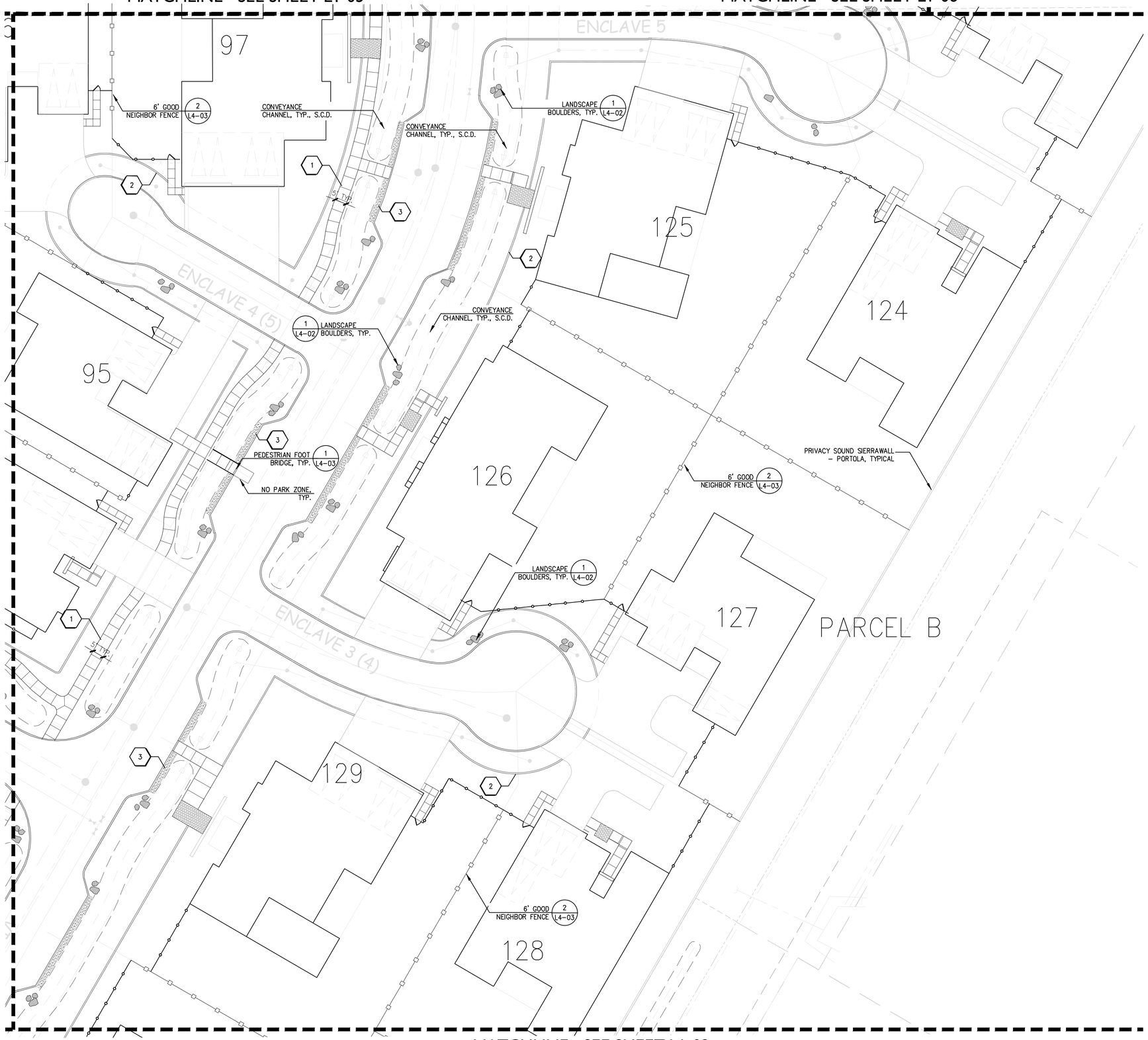

MATCHLINE - SEE SHEET L1-02

LAYOUT LEGEND

- CONCRETE PAVING SCORING
- STREET LIGHT, S.C.D.
- BOLLARD LIGHT, S.C.D.
- PEDESTRIAN FOOTBRIDGE
- BOULDERS
- MASONRY WALL
- 6' GOOD NEIGHBOR FENCE
- 6' FENCE

LANDSCAPE KEY MAP

GATES +ASSOCIATES
LANDSCAPE ARCHITECTURE
LAND PLANNING · URBAN DESIGN
1655 N. MAIN ST. STE 365, WALNUT CREEK, CA 94596
T 925.736.8176 www.dgates.com

BORELLO RANCH BACKBONE PHASE 3

MORGAN HILL
CALIFORNIA

Toll Brothers

ISSUE:	DESCRIPTION:	DATE:

REGISTERED LANDSCAPE ARCHITECT
GREG CASE · No. 5250
6/30/2022
11/08/2021
L.A.
STATE OF CALIFORNIA

PROJECT NUMBER:	5250
DRAWN:	JG, GH
CHECK:	RC
DATE:	11/08/2021
SCALE:	

0 10' 20' 40'

LAYOUT PLAN

L1-03

© GATES+ASSOCIATES, INC.| 2017

MATCHLINE - SEE SHEET L1-06

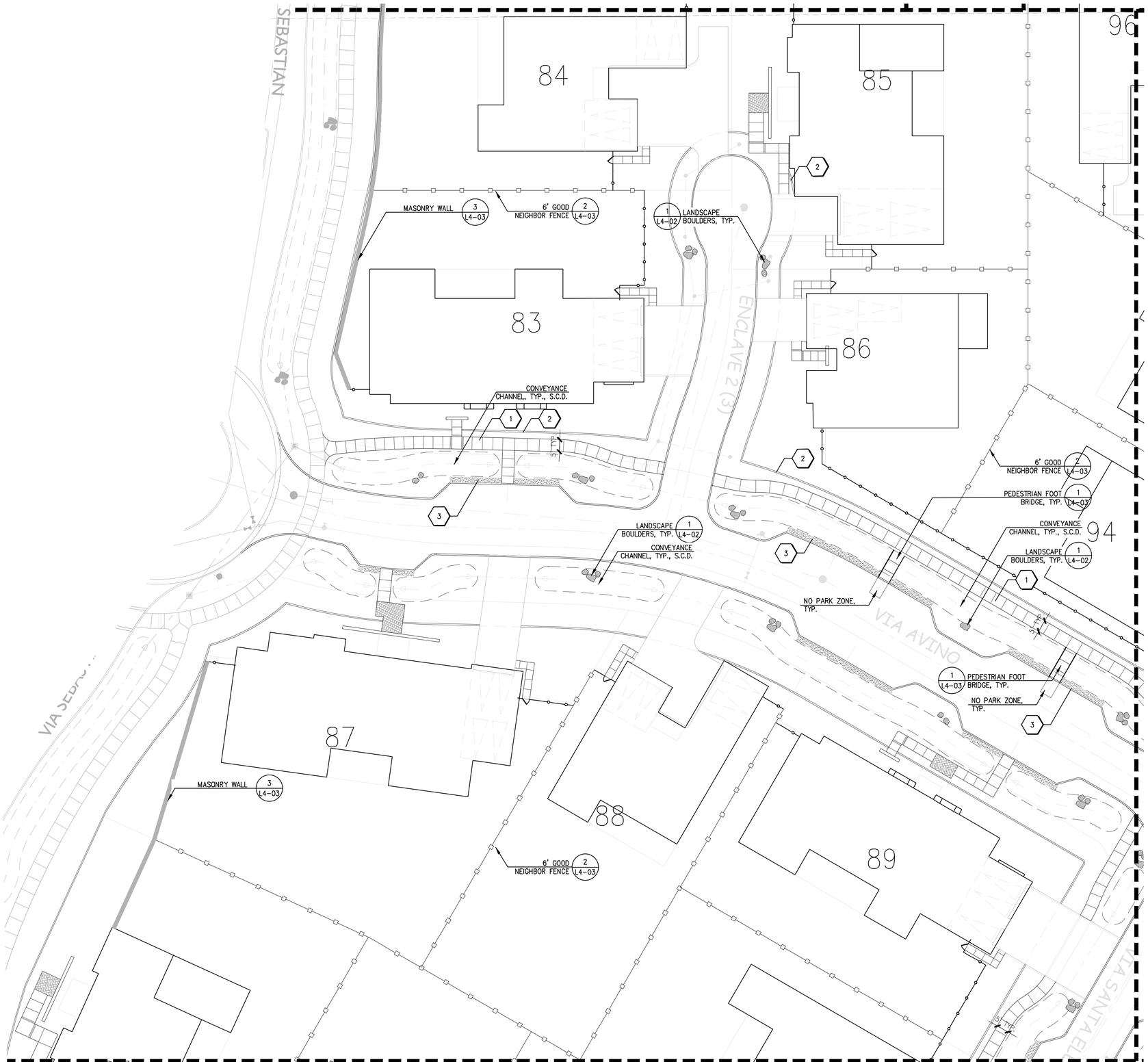

MATCHLINE - SEE SHEET L1-01

MATCHLINE - SEE SHEET L1-02

MATCHLINE - SEE SHEET L1-03

LAYOUT LEGEND

- CONCRETE PAVING SCORING
- STREET LIGHT, S.C.D.
- BOLLARD LIGHT, S.C.D.
- PEDESTRIAN FOOTBRIDGE
- BOULDERS
- MASONRY WALL
- 6' GOOD NEIGHBOR FENCE
- 6' FENCE

LANDSCAPE KEY MAP

GATES +ASSOCIATES
LANDSCAPE ARCHITECTURE
LAND PLANNING · URBAN DESIGN
1655 N. MAIN ST. STE 365, WALNUT CREEK, CA 94596
T 925.736.8176 www.dgates.com

BORELLO RANCH BACKBONE PHASE 3

MORGAN HILL
CALIFORNIA

Toll Brothers

ISSUE:	DESCRIPTION:	DATE:

REGISTERED LANDSCAPE ARCHITECT · GARY CASE · No. 5250 · 6/30/2022 Renewal Date · 11/08/2021 Date · L.A. · STATE OF CALIFORNIA

PROJECT NUMBER:	5250
DRAWN:	JG, GH
CHECK:	RC
DATE:	11/08/2021
SCALE:	

0 10' 20' 40'

LAYOUT PLAN

L1-04

© GATES+ASSOCIATES, INC.| 2017

MATCHLINE - SEE SHEET L1-07

MATCHLINE - SEE SHEET L1-06

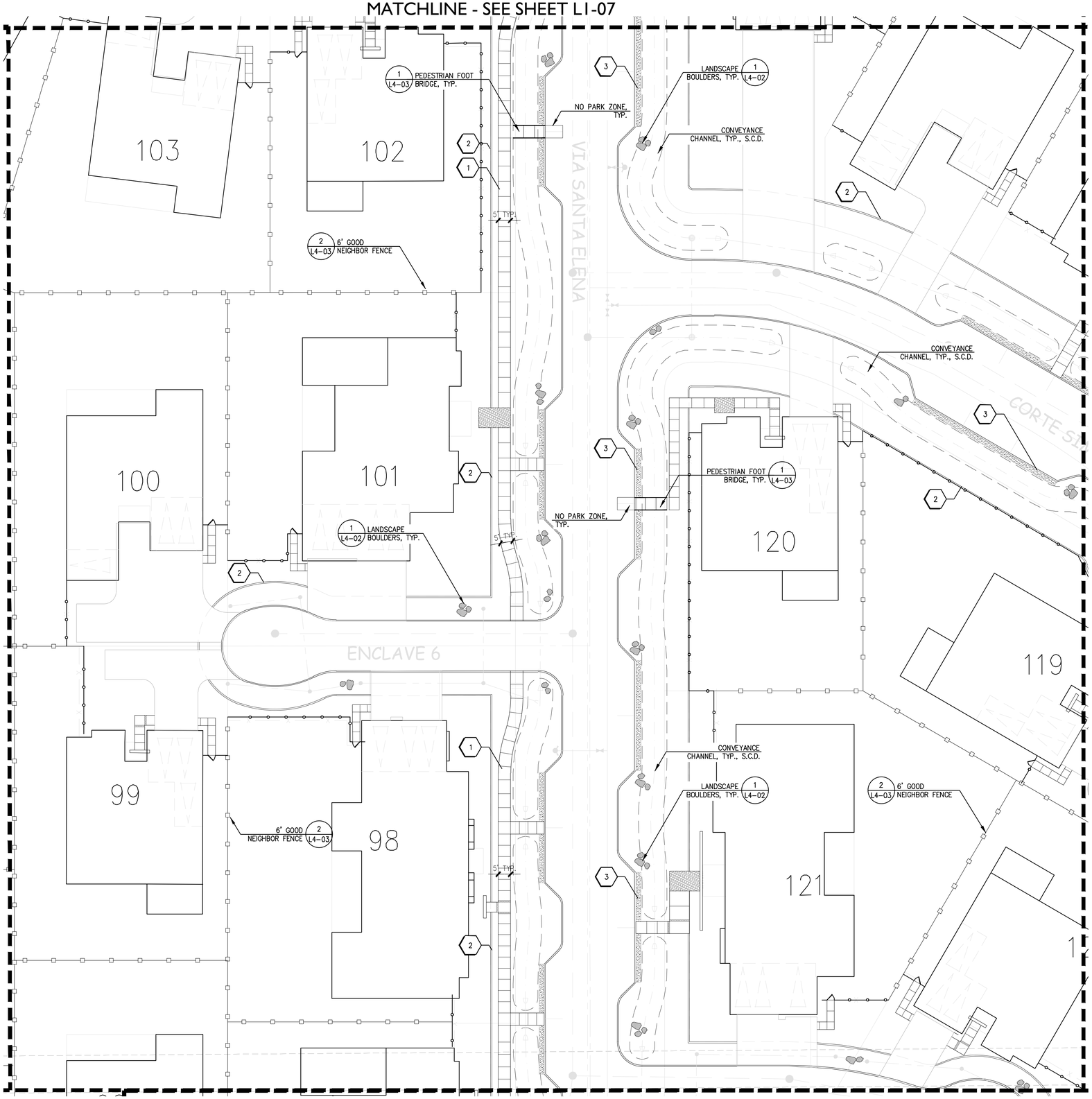

MATCHLINE - SEE SHEET L1-06

MATCHLINE - SEE SHEET L1-03

LAYOUT LEGEND

- CONCRETE PAVING SCORING
- STREET LIGHT, S.C.D.
- BOLLARD LIGHT, S.C.D.
- PEDESTRIAN FOOTBRIDGE
- BOULDERS
- MASONRY WALL
- 6' GOOD NEIGHBOR FENCE
- 6' FENCE

LANDSCAPE KEY MAP

GATES +ASSOCIATES
LANDSCAPE ARCHITECTURE
LAND PLANNING · URBAN DESIGN
1655 N. MAIN ST. STE 365, WALNUT CREEK, CA 94596
T 925.736.8176 www.dgates.com

BORELLO RANCH BACKBONE PHASE 3

MORGAN HILL
CALIFORNIA

Toll Brothers

ISSUE:	DESCRIPTION:	DATE:

REGISTERED LANDSCAPE ARCHITECT · CASEY CASE · NO. 4593 · 6/30/2022 · Renewal Date · 11/08/2021 · Date · L.A. · STATE OF CALIFORNIA

PROJECT NUMBER:	5250
DRAWN:	JG, GH
CHECK:	RC
DATE:	11/08/2021
SCALE:	

0 10' 20' 40'

PLANTING PLAN

L1-05

© GATES+ASSOCIATES, INC. | 2017

MATCHLINE - SEE SHEET L1-08

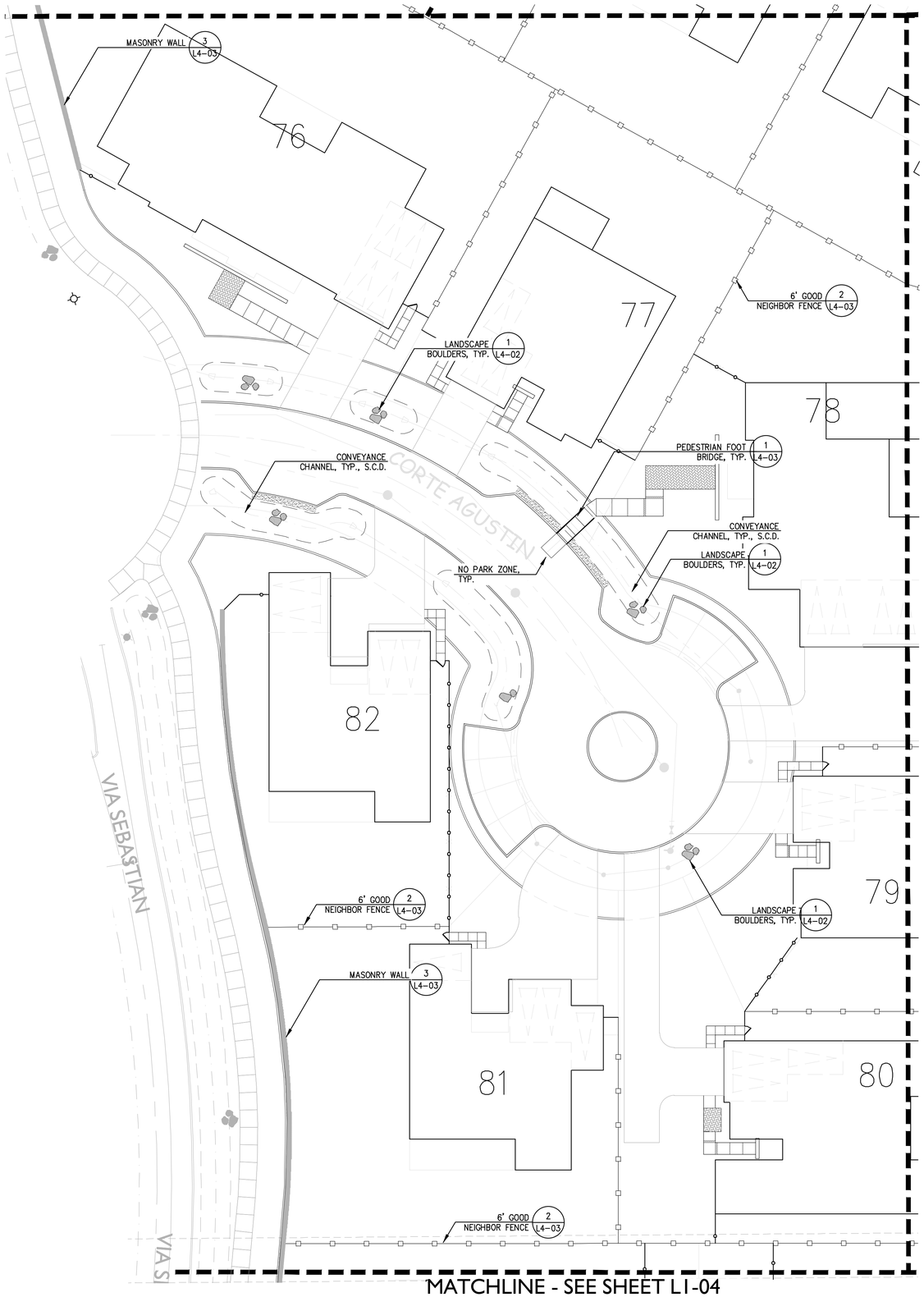

MATCHLINE - SEE SHEET L1-04

MATCHLINE - SEE SHEET L1-05

MATCHLINE - SEE SHEET L1-05

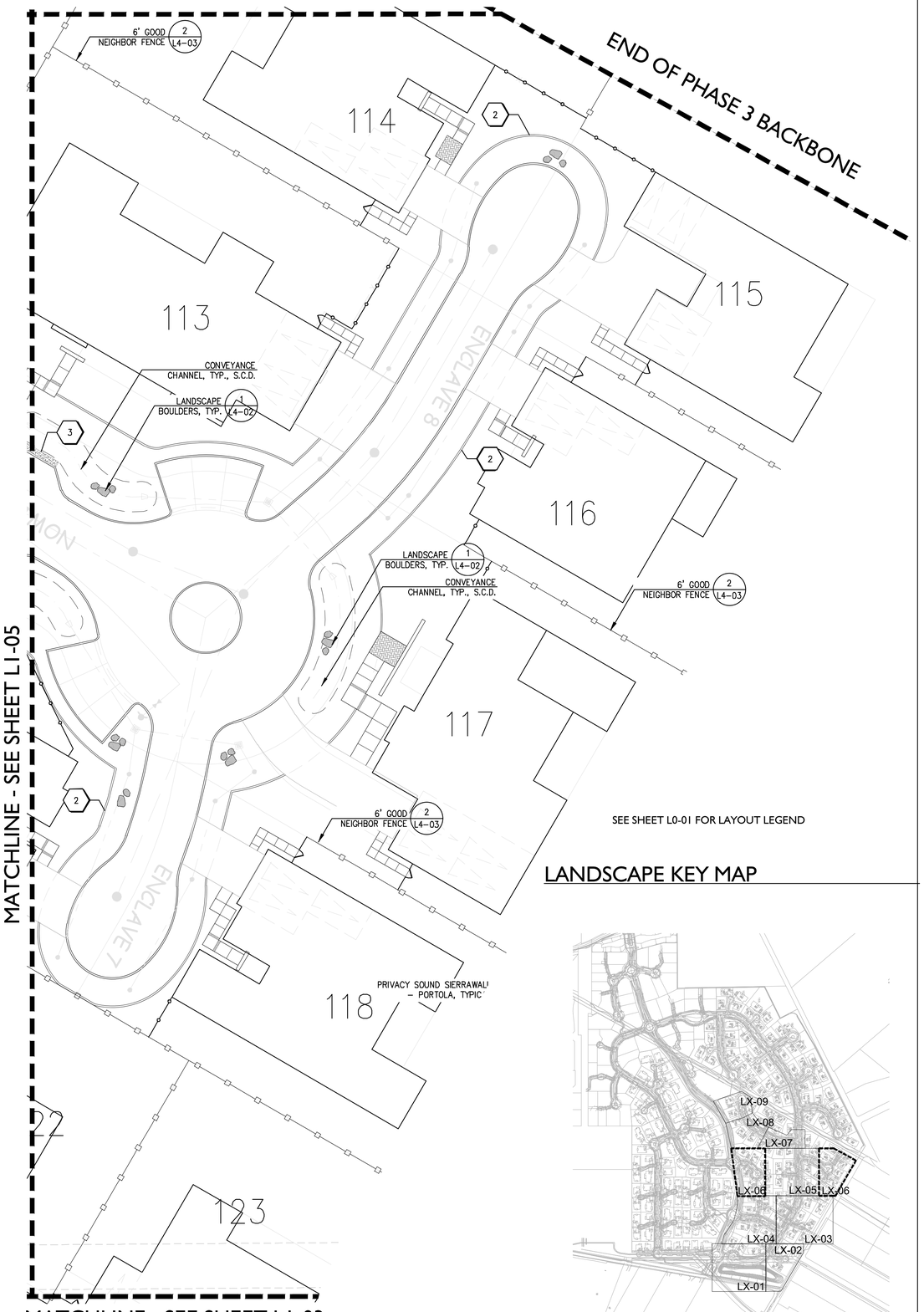

MATCHLINE - SEE SHEET L1-03

SEE SHEET L0-01 FOR LAYOUT LEGEND

LANDSCAPE KEY MAP

GATES +ASSOCIATES
LANDSCAPE ARCHITECTURE
LAND PLANNING · URBAN DESIGN
1655 N. MAIN ST. STE 365, WALNUT CREEK, CA 94596
T 925.736.8176 www.dgates.com

BORELLO RANCH BACKBONE PHASE 3

MORGAN HILL
CALIFORNIA

Toll Brothers

ISSUE:	DESCRIPTION:	DATE:

REGISTERED LANDSCAPE ARCHITECT
CARL ONSE
6/30/2022
Renewal Date
11/08/2021
Date
L.A.
STATE OF CALIFORNIA

PROJECT NUMBER:	5250
DRAWN:	JG, GH
CHECK:	RC
DATE:	11/08/2021
SCALE:	

0 10' 20' 40'

LAYOUT PLAN

L1-06

© GATES+ASSOCIATES, INC. | 2017

LAYOUT LEGEND

- CONCRETE PAVING SCORING
- STREET LIGHT, S.C.D.
- BOLLARD LIGHT, S.C.D.
- PEDESTRIAN FOOTBRIDGE
- BOULDERS
- MASONRY WALL
- 6' GOOD NEIGHBOR FENCE
- 6' FENCE

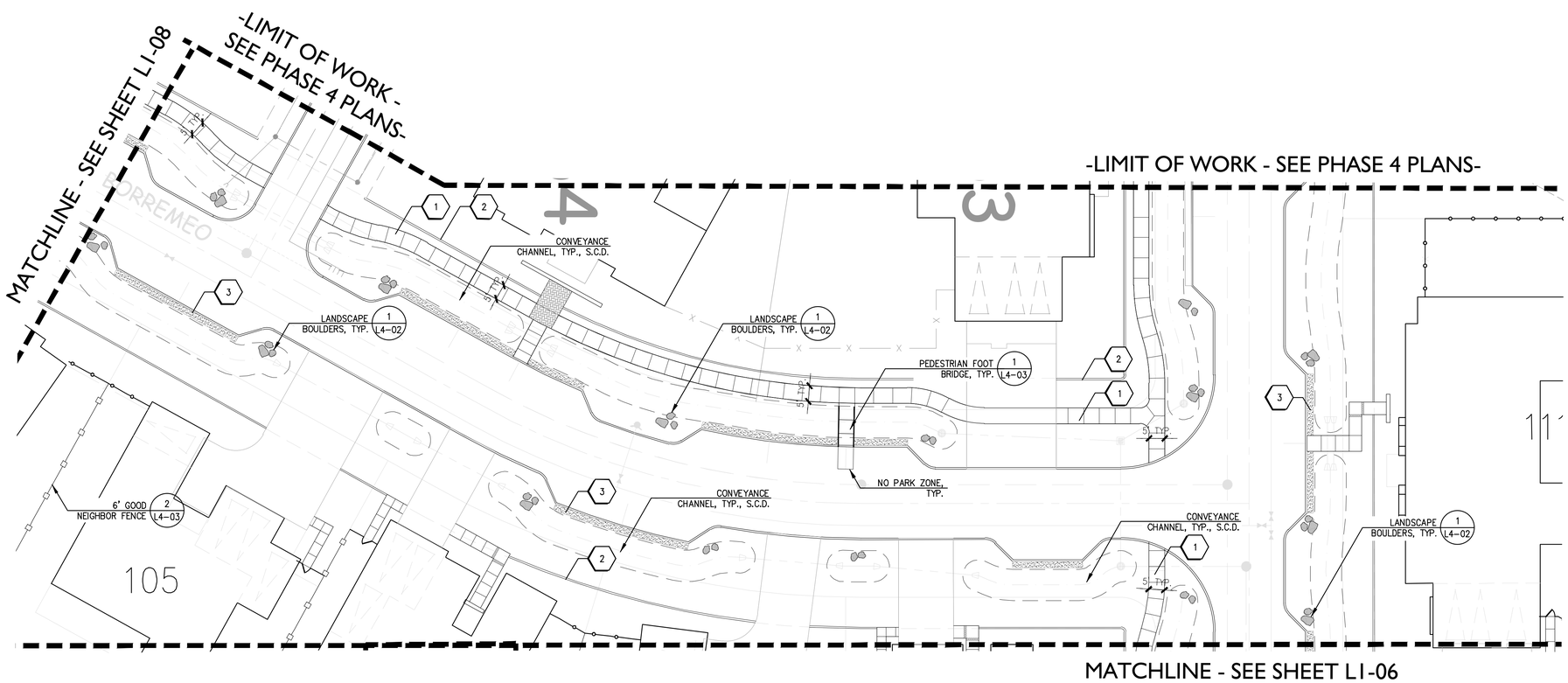

LANDSCAPE KEY MAP

GATES +ASSOCIATES
LANDSCAPE ARCHITECTURE
LAND PLANNING · URBAN DESIGN
1655 N. MAIN ST. STE 365, WALNUT CREEK, CA 94596
T 925.736.8176 www.dgates.com

BORELLO RANCH BACKBONE PHASE 3

MORGAN HILL
CALIFORNIA

Toll Brothers

ISSUE:	DESCRIPTION:	DATE:

REGISTERED LANDSCAPE ARCHITECT
CARY CASE · No. 5247
6/30/2022
11/08/2021
L.A.
STATE OF CALIFORNIA

PROJECT NUMBER:	5250
DRAWN:	JG, GH
CHECK:	RC
DATE:	11/08/2021
SCALE:	

0 10' 20' 40'

LAYOUT PLAN

L1-07

© GATES+ASSOCIATES, INC.| 2017

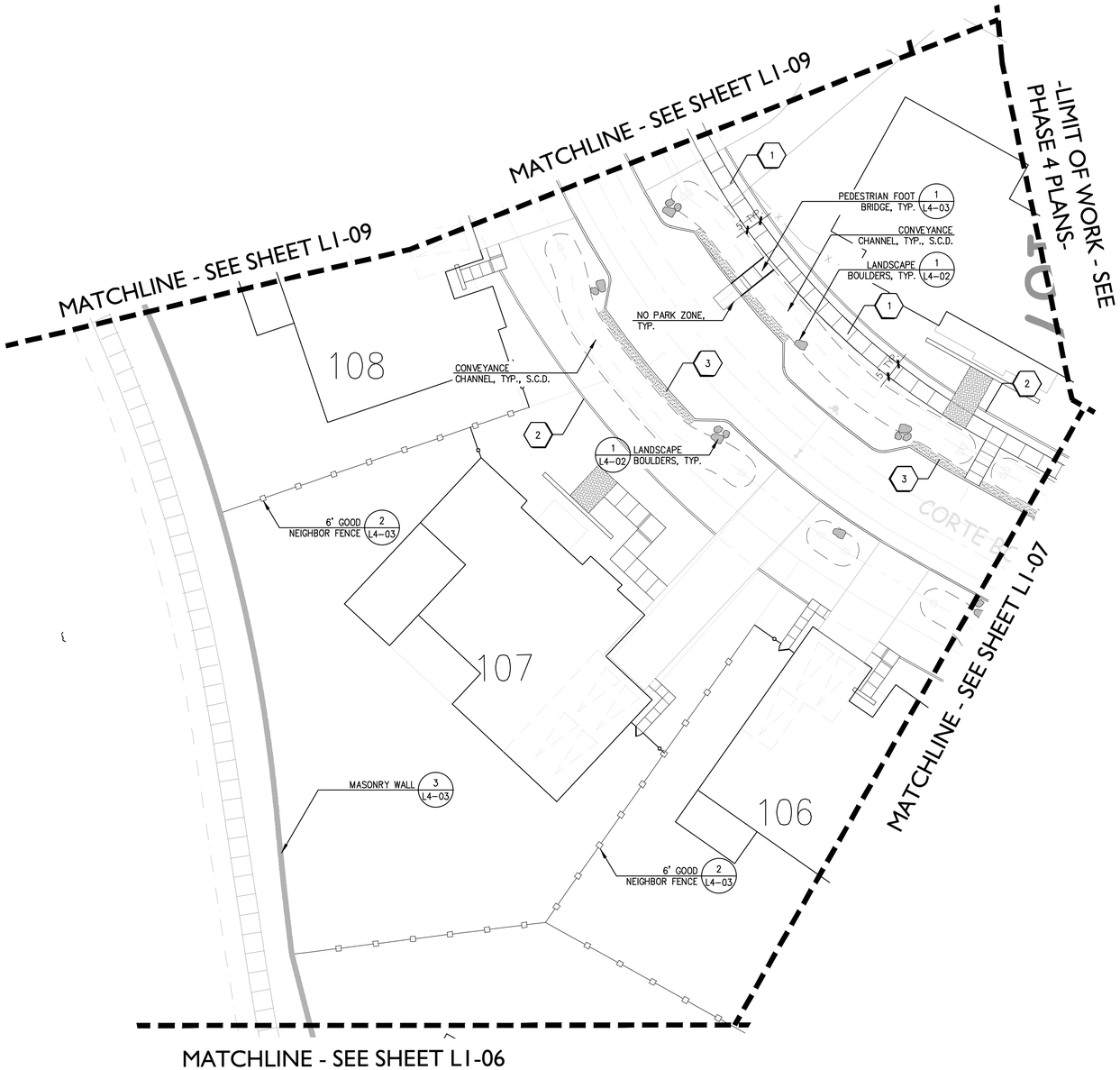

LAYOUT LEGEND

- CONCRETE PAVING SCORING
- STREET LIGHT, S.C.D.
- BOLLARD LIGHT, S.C.D.
- PEDESTRIAN FOOTBRIDGE
- BOULDERS
- MASONRY WALL
- 6' GOOD NEIGHBOR FENCE
- 6' FENCE

LANDSCAPE KEY MAP

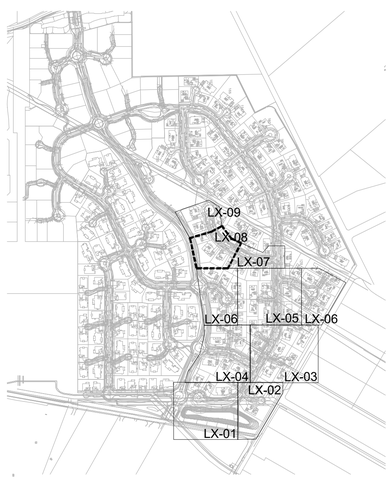

GATES +ASSOCIATES
LANDSCAPE ARCHITECTURE
LAND PLANNING · URBAN DESIGN
1655 N. MAIN ST. STE 365, WALNUT CREEK, CA 94596
T 925.736.8176 www.dgates.com

BORELLO RANCH BACKBONE PHASE 3

MORGAN HILL
CALIFORNIA

Toll Brothers

ISSUE:	DESCRIPTION:	DATE:

REGISTERED LANDSCAPE ARCHITECT
CAREY CASE · No. 4055
6/30/2022
Renewal Date
11/08/2021
Date
L.A.
STATE OF CALIFORNIA

PROJECT NUMBER:	5250
DRAWN:	JG, GH
CHECK:	RC
DATE:	11/08/2021
SCALE:	

0 10' 20' 40'

LAYOUT PLAN

L1-08

© GATES+ASSOCIATES, INC. | 2017

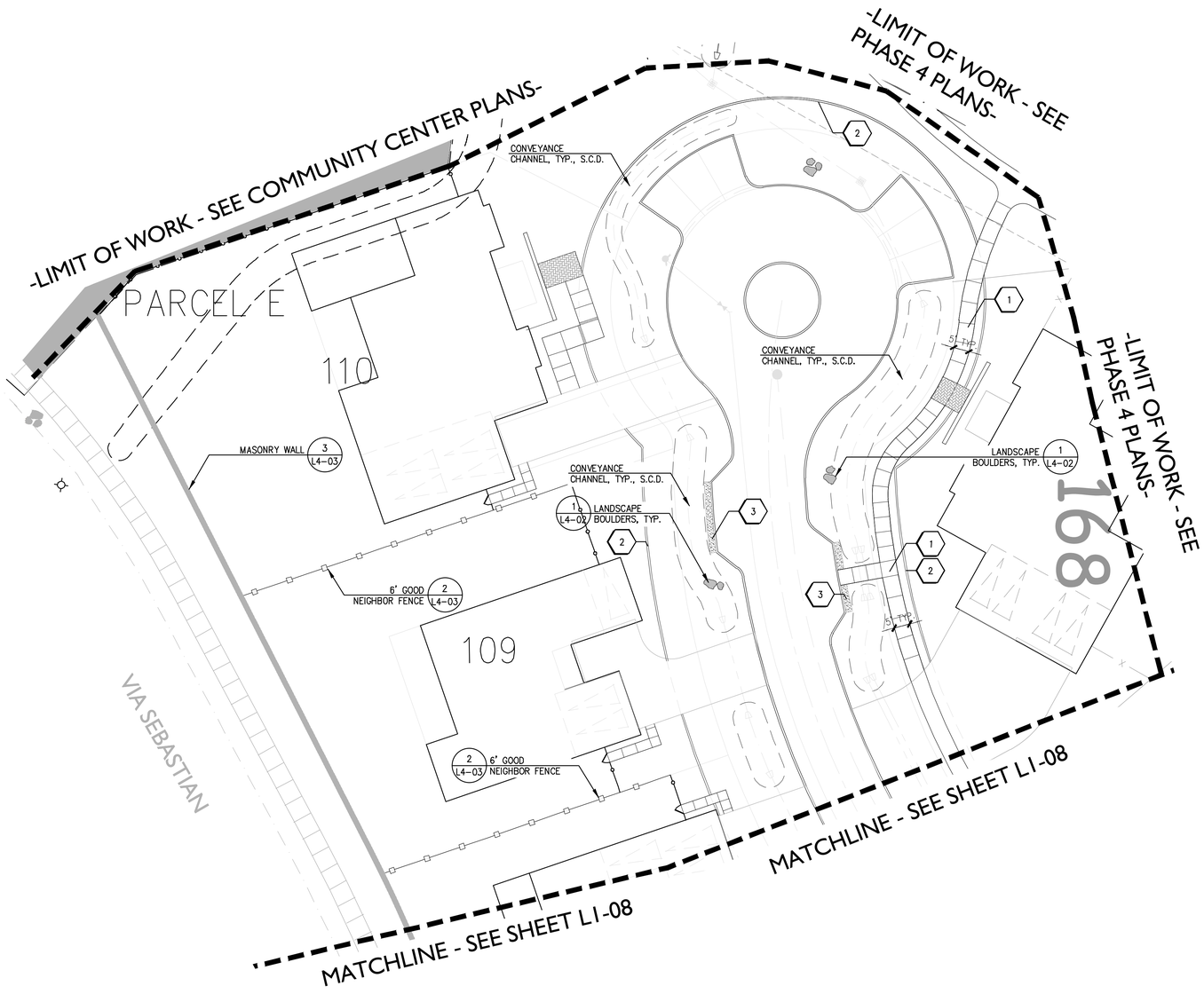

LAYOUT LEGEND

- CONCRETE PAVING SCORING
- STREET LIGHT, S.C.D.
- BOLLARD LIGHT, S.C.D.
- PEDESTRIAN FOOTBRIDGE
- BOULDERS
- MASONRY WALL
- 6' GOOD NEIGHBOR FENCE
- 6' FENCE

LANDSCAPE KEY MAP

GATES +ASSOCIATES
LANDSCAPE ARCHITECTURE
LAND PLANNING · URBAN DESIGN
1655 N. MAIN ST. STE 365, WALNUT CREEK, CA 94596
T 925.736.8176 www.dgates.com

BORELLO RANCH BACKBONE PHASE 3

MORGAN HILL
CALIFORNIA

Toll Brothers

ISSUE:	DESCRIPTION:	DATE:

REGISTERED LANDSCAPE ARCHITECT
CASEY CASE
6/30/2022
Renewal Date
11/08/2021
Date
L.A.
STATE OF CALIFORNIA

PROJECT NUMBER:	5250
DRAWN:	JG, GH
CHECK:	RC
DATE:	11/08/2021
SCALE:	

0 10' 20' 40'

LAYOUT PLAN

LI-09

© GATES+ASSOCIATES, INC. | 2017

MATCHLINE - SEE SHEET L2-04

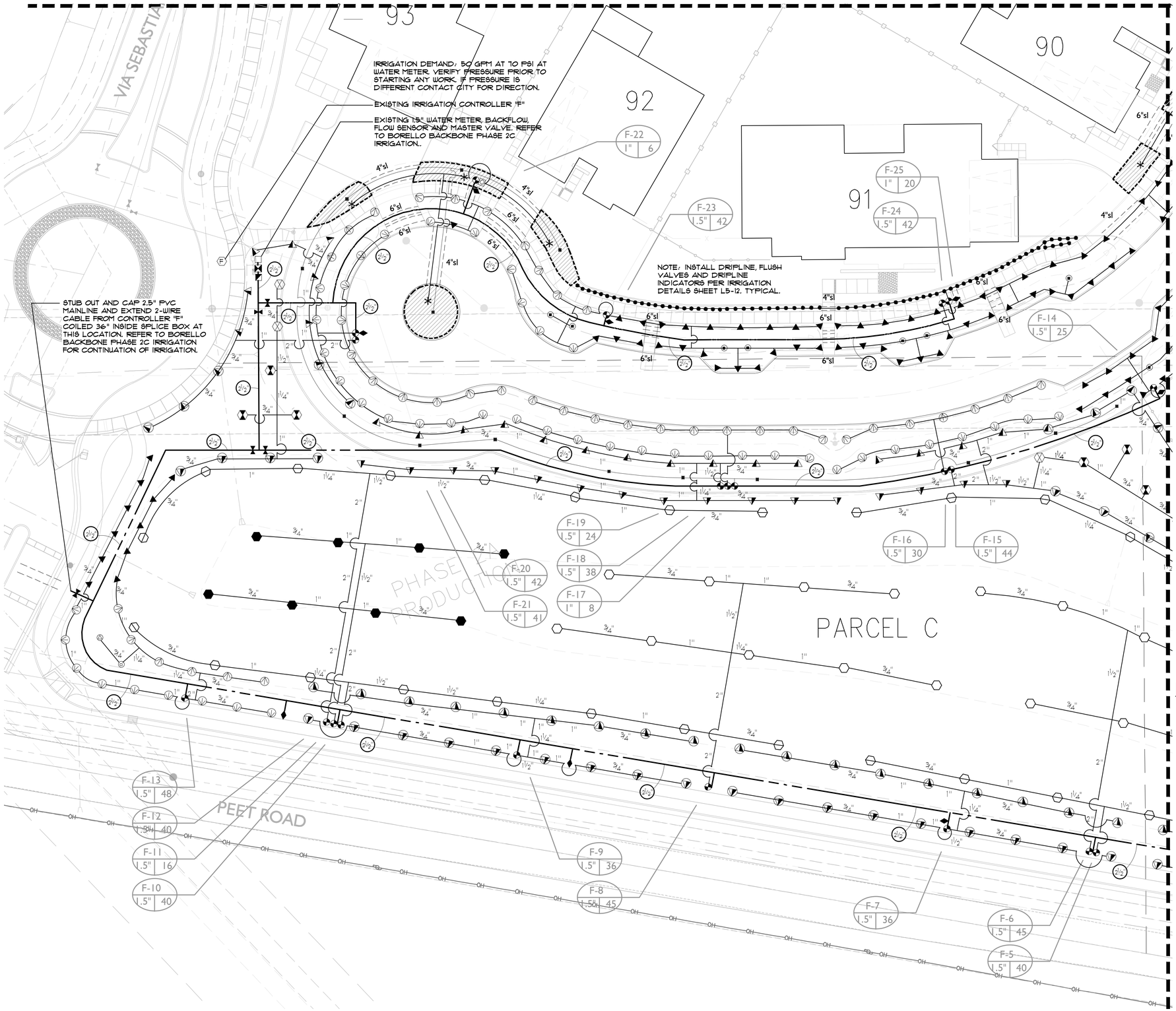

MATCHLINE - SEE SHEET L2-02

LATERAL LINE SIZING CHART

SPRINKLER TYPE	GPM	PIPE SIZE	NO. OF BUBBLERS*
SHRUB BUBBLERS 0.25 GPM	1-5 5.25-10 10.25-20 20.1-22	3/4" 1" 1 1/4" 1 1/2"	1-20 21-40 41-80 81-88
TREE BUBBLERS 0.50 GPM	1-5 5.25-10 10.25-20	3/4" 1" 1 1/4"	1-10 11-20 21-40
SPRAY HEADS VARIES	1-8 9-15 16-20 21-32 33-45	3/4" 1" 1 1/4" 1 1/2" 2"	N/A
DRIPLINE VARIES	1-5 5.25-10	3/4" 1"	N/A

* QUANTITY INDICATES NO. OF BUBBLERS, NOT NO. OF TREES. THERE ARE TWO BUBBLERS PER TREE AND ONE BUBBLER PER SHRUB.

LANDSCAPE KEY MAP

GATES +ASSOCIATES
LANDSCAPE ARCHITECTURE
LAND PLANNING · URBAN DESIGN
1655 N. MAIN ST. STE 365, WALNUT CREEK, CA 94596
T 925.736.8176 www.dgates.com

BORELLO RANCH BACKBONE PHASE 3

MORGAN HILL
CALIFORNIA

Toll Brothers

ISSUE:	DESCRIPTION:	DATE:

REGISTERED LANDSCAPE ARCHITECT
CARL ROSE
No. 5052
Expiration Date
11/08/2021
L.A.
STATE OF CALIFORNIA

PROJECT NUMBER:	5250
DRAWN:	JG, GH
CHECK:	RC
DATE:	11/08/2021
SCALE:	1"=20'

0 10' 20' 40'

IRRIGATION PLAN

L2-01

© GATES+ASSOCIATES, INC.| 2017

MATCHLINE - SEE SHEET L2-03

MATCHLINE - SEE SHEET L2-01

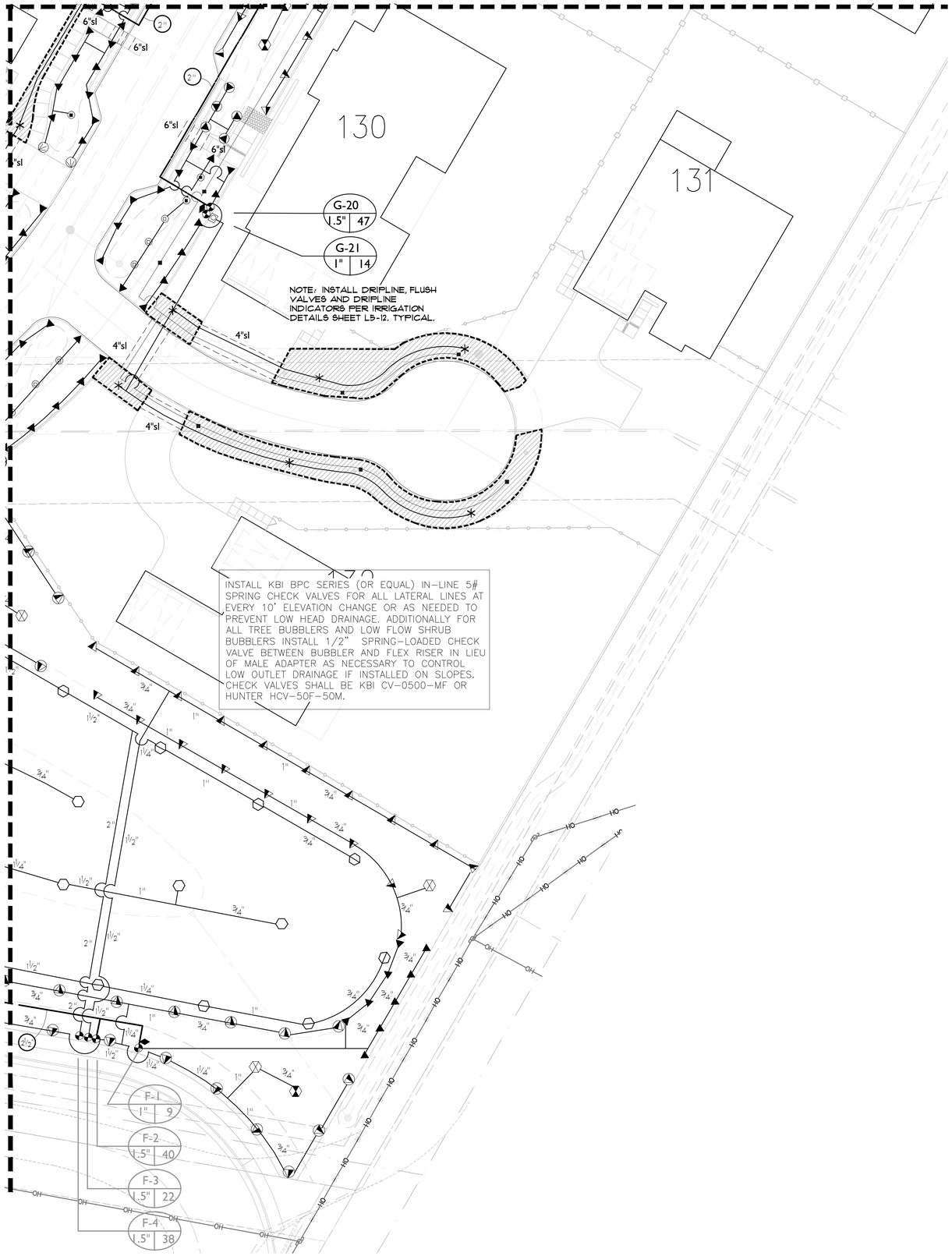

LATERAL LINE SIZING CHART

SPRINKLER TYPE	GPM	PIPE SIZE	NO. OF BUBBLERS*
SHRUB BUBBLERS 0.25 GPM	1-5 5.25-10 10.25-20 20.1-22	3/4" 1" 1 1/4" 1 1/2"	1-20 21-40 41-80 81-88
TREE BUBBLERS 0.50 GPM	1-5 5.25-10 10.25-20	3/4" 1" 1 1/4"	1-10 11-20 21-40
SPRAY HEADS VARIES	1-8 9-15 16-20 21-32 33-45	3/4" 1" 1 1/4" 1 1/2" 2"	N/A
DRIPLINE VARIES	1-5 5.25-10	3/4" 1"	N/A

* QUANTITY INDICATES NO. OF BUBBLERS, NOT NO. OF TREES. THERE ARE TWO BUBBLERS PER TREE AND ONE BUBBLER PER SHRUB.

LANDSCAPE KEY MAP

GATES +ASSOCIATES
LANDSCAPE ARCHITECTURE
LAND PLANNING · URBAN DESIGN
1655 N. MAIN ST. STE 365, WALNUT CREEK, CA 94596
T 925.736.8176 www.dgates.com

BORELLO RANCH BACKBONE PHASE 3

MORGAN HILL
CALIFORNIA

Toll Brothers

ISSUE:	DESCRIPTION:	DATE:

REGISTERED LANDSCAPE ARCHITECT
CHRIS CASE · No. 4593
6/30/2022
Renewal Date
11/08/2021
Date
L.A.
STATE OF CALIFORNIA

PROJECT NUMBER:	5250
DRAWN:	JG, GH
CHECK:	RC
DATE:	11/08/2021
SCALE:	1"=20'

0 10' 20' 40'

IRRIGATION PLAN

L2-02

© GATES+ASSOCIATES, INC.| 2017

MATCHLINE - SEE SHEET L2-05

MATCHLINE - SEE SHEET L2-06

MATCHLINE - SEE SHEET L2-04

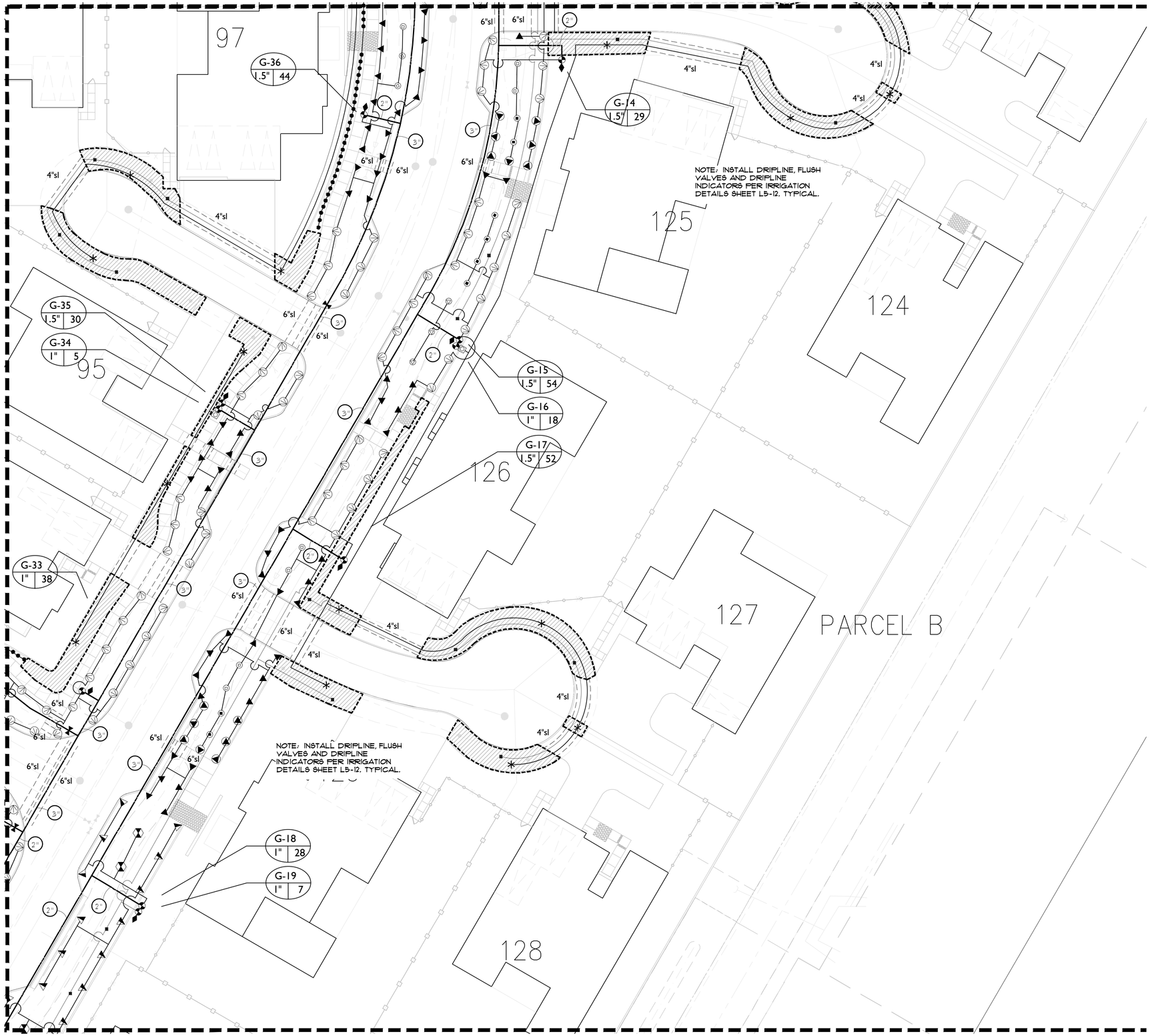

MATCHLINE - SEE SHEET L2-02

LATERAL LINE SIZING CHART

SPRINKLER TYPE	GPM	PIPE SIZE	NO. OF BUBBLERS*
SHRUB BUBBLERS 0.25 GPM	1-5 5.25-10 10.25-20 20.1-22	3/4" 1" 1 1/4" 1 1/2"	1-20 21-40 41-80 81-88
TREE BUBBLERS 0.50 GPM	1-5 5.25-10 10.25-20	3/4" 1" 1 1/4"	1-10 11-20 21-40
SPRAY HEADS VARIES	1-8 9-15 16-20 21-32 33-45	3/4" 1" 1 1/4" 1 1/2" 2"	N/A
DRIPLINE VARIES	1-5 5.25-10	3/4" 1"	N/A

* QUANTITY INDICATES NO. OF BUBBLERS, NOT NO. OF TREES. THERE ARE TWO BUBBLERS PER TREE AND ONE BUBBLER PER SHRUB.

LANDSCAPE KEY MAP

GATES +ASSOCIATES
LANDSCAPE ARCHITECTURE
LAND PLANNING · URBAN DESIGN
1655 N. MAIN ST. STE 365, WALNUT CREEK, CA 94596
T 925.736.8176 www.dgates.com

BORELLO RANCH BACKBONE PHASE 3

MORGAN HILL
CALIFORNIA

Toll Brothers

ISSUE:	DESCRIPTION:	DATE:

REGISTERED LANDSCAPE ARCHITECT
CHRISTOPHER GASE
6/30/2022
Renewal Date
11/08/2021
Date
L.A.
STATE OF CALIFORNIA

PROJECT NUMBER:	5250
DRAWN:	JG, GH
CHECK:	RC
DATE:	11/08/2021
SCALE:	1"=20'

0 10' 20' 40'

IRRIGATION PLAN

L2-03

© GATES+ASSOCIATES, INC.| 2017

MATCHLINE - SEE SHEET L2-06

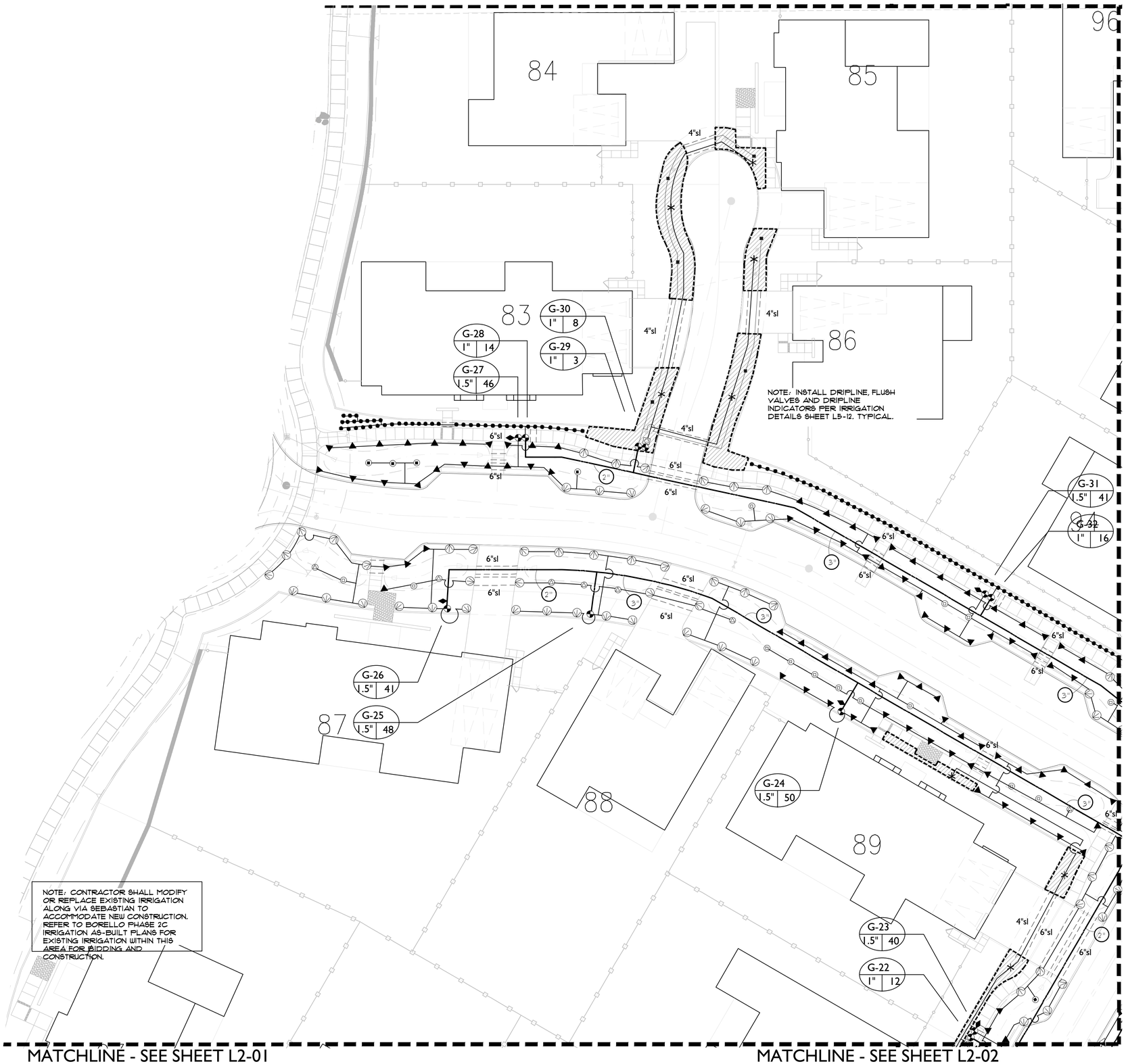

MATCHLINE - SEE SHEET L2-01

MATCHLINE - SEE SHEET L2-02

MATCHLINE - SEE SHEET L2-03

LATERAL LINE SIZING CHART

SPRINKLER TYPE	GPM	PIPE SIZE	NO. OF BUBBLERS*
SHRUB BUBBLERS 0.25 GPM	1-5 5.25-10 10.25-20 20.1-22	3/4" 1" 1 1/4" 1 1/2"	1-20 21-40 41-80 81-88
TREE BUBBLERS 0.50 GPM	1-5 5.25-10 10.25-20	3/4" 1" 1 1/4"	1-10 11-20 21-40
SPRAY HEADS VARIES	1-8 9-15 16-20 21-32 33-45	3/4" 1" 1 1/4" 1 1/2" 2"	N/A
DRIPLINE VARIES	1-5 5.25-10	3/4" 1"	N/A

* QUANTITY INDICATES NO. OF BUBBLERS, NOT NO. OF TREES. THERE ARE TWO BUBBLERS PER TREE AND ONE BUBBLER PER SHRUB.

LANDSCAPE KEY MAP

GATES +ASSOCIATES
LANDSCAPE ARCHITECTURE
LAND PLANNING · URBAN DESIGN
1655 N. MAIN ST. STE 365, WALNUT CREEK, CA 94596
T 925.736.8176 www.dgates.com

BORELLO RANCH BACKBONE PHASE 3

MORGAN HILL
CALIFORNIA

Toll Brothers

ISSUE:	DESCRIPTION:	DATE:

REGISTERED LANDSCAPE ARCHITECT
CHRIS CASE · No. 5257
6/30/2022
11/08/2021
L.A.
STATE OF CALIFORNIA

PROJECT NUMBER:	5250
DRAWN:	JG, GH
CHECK:	RC
DATE:	11/08/2021
SCALE:	1"=20'

0 10' 20' 40'

IRRIGATION PLAN

L2-04

© GATES+ASSOCIATES, INC.| 2017

MATCHLINE - SEE SHEET L2-07

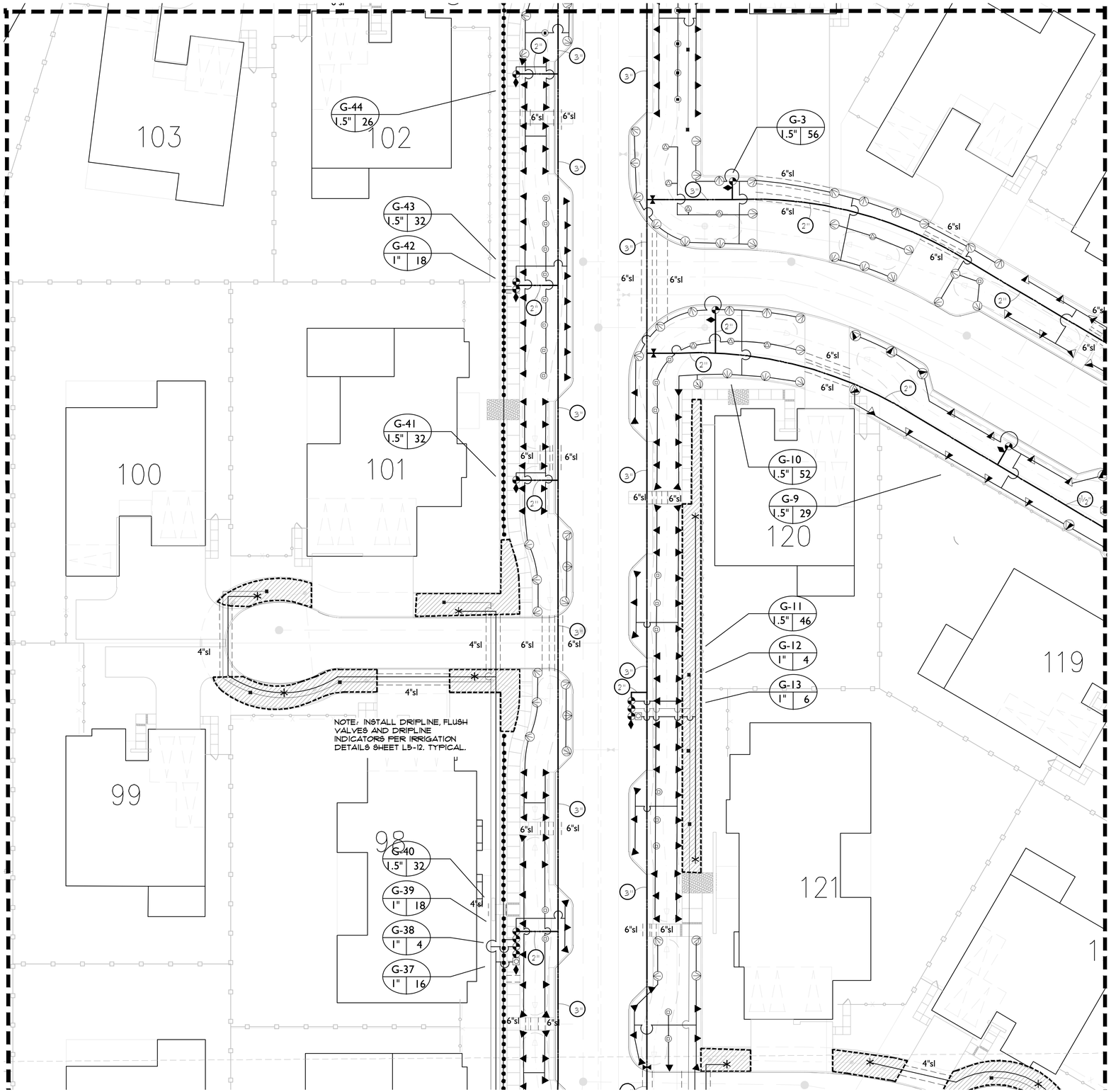

MATCHLINE - SEE SHEET L2-03

LATERAL LINE SIZING CHART

SPRINKLER TYPE	GPM	PIPE SIZE	NO. OF BUBBLERS*
SHRUB BUBBLERS 0.25 GPM	1-5 5.25-10 10.25-20 20.1-22	3/4" 1" 1 1/4" 1 1/2"	1-20 21-40 41-80 81-88
TREE BUBBLERS 0.50 GPM	1-5 5.25-10 10.25-20	3/4" 1" 1 1/4"	1-10 11-20 21-40
SPRAY HEADS VARIES	1-8 9-15 16-20 21-32 33-45	3/4" 1" 1 1/4" 1 1/2" 2"	N/A
DRIPLINE VARIES	1-5 5.25-10	3/4" 1"	N/A

* QUANTITY INDICATES NO. OF BUBBLERS, NOT NO. OF TREES. THERE ARE TWO BUBBLERS PER TREE AND ONE BUBBLER PER SHRUB.

LANDSCAPE KEY MAP

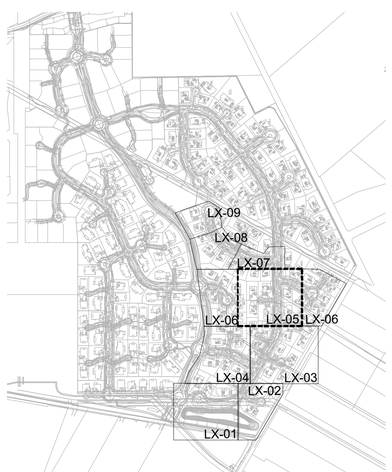

GATES +ASSOCIATES
LANDSCAPE ARCHITECTURE
LAND PLANNING · URBAN DESIGN
1655 N. MAIN ST. STE 365, WALNUT CREEK, CA 94596
T 925.736.8176 www.dgates.com

BORELLO RANCH BACKBONE PHASE 3

MORGAN HILL
CALIFORNIA

Toll Brothers

ISSUE:	DESCRIPTION:	DATE:

REGISTERED LANDSCAPE ARCHITECT
CHRIS OSE · No. 5250
6/30/2022
Renewal Date
11/08/2021
Date
L.A.
STATE OF CALIFORNIA

PROJECT NUMBER:	5250
DRAWN:	JG, GH
CHECK:	RC
DATE:	11/08/2021
SCALE:	1"=20'

0 10' 20' 40'

IRRIGATION PLAN

L2-05

© GATES+ASSOCIATES, INC.| 2017

MATCHLINE - SEE SHEET L2-08

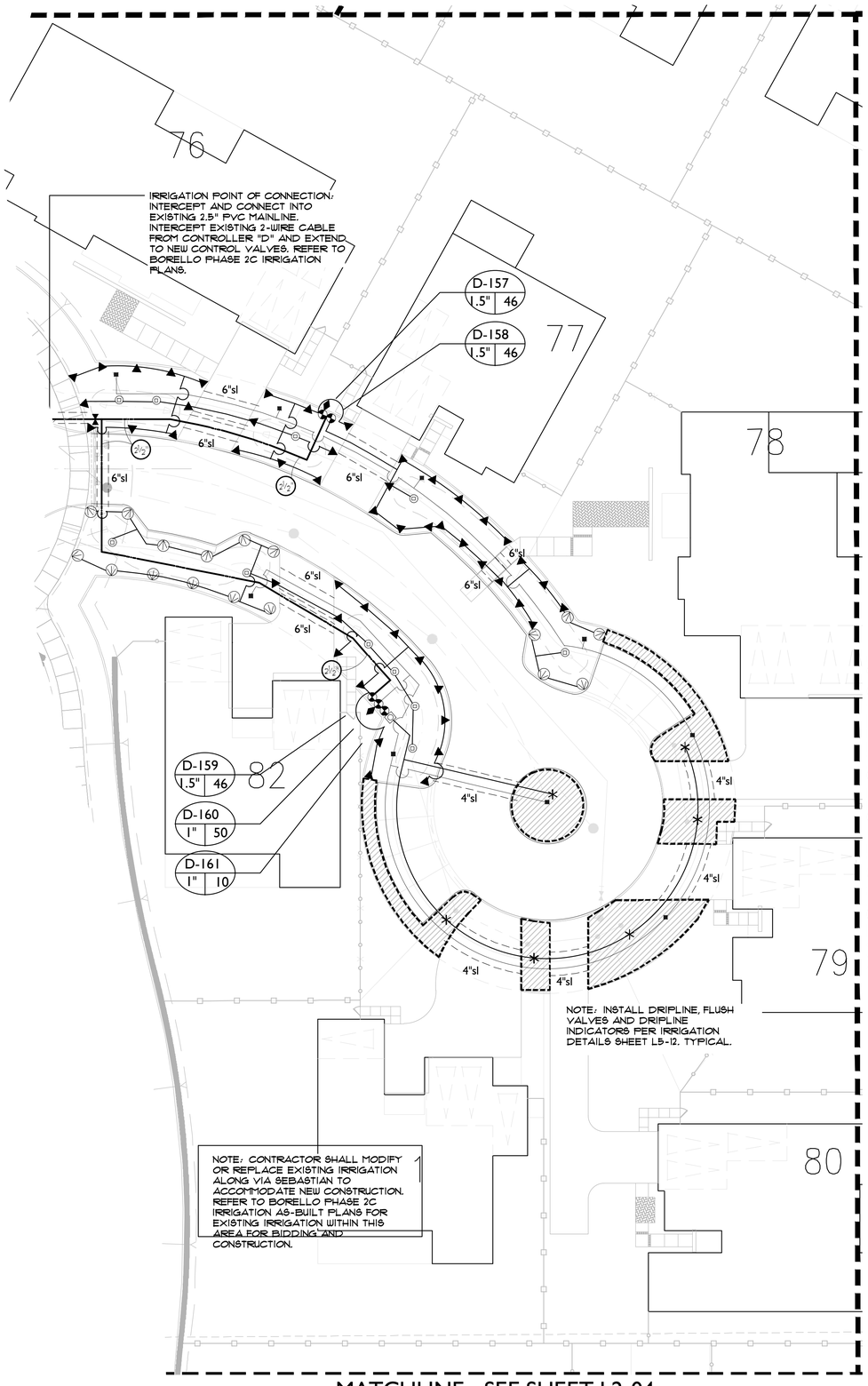

MATCHLINE - SEE SHEET L2-04

MATCHLINE - SEE SHEET L2-05

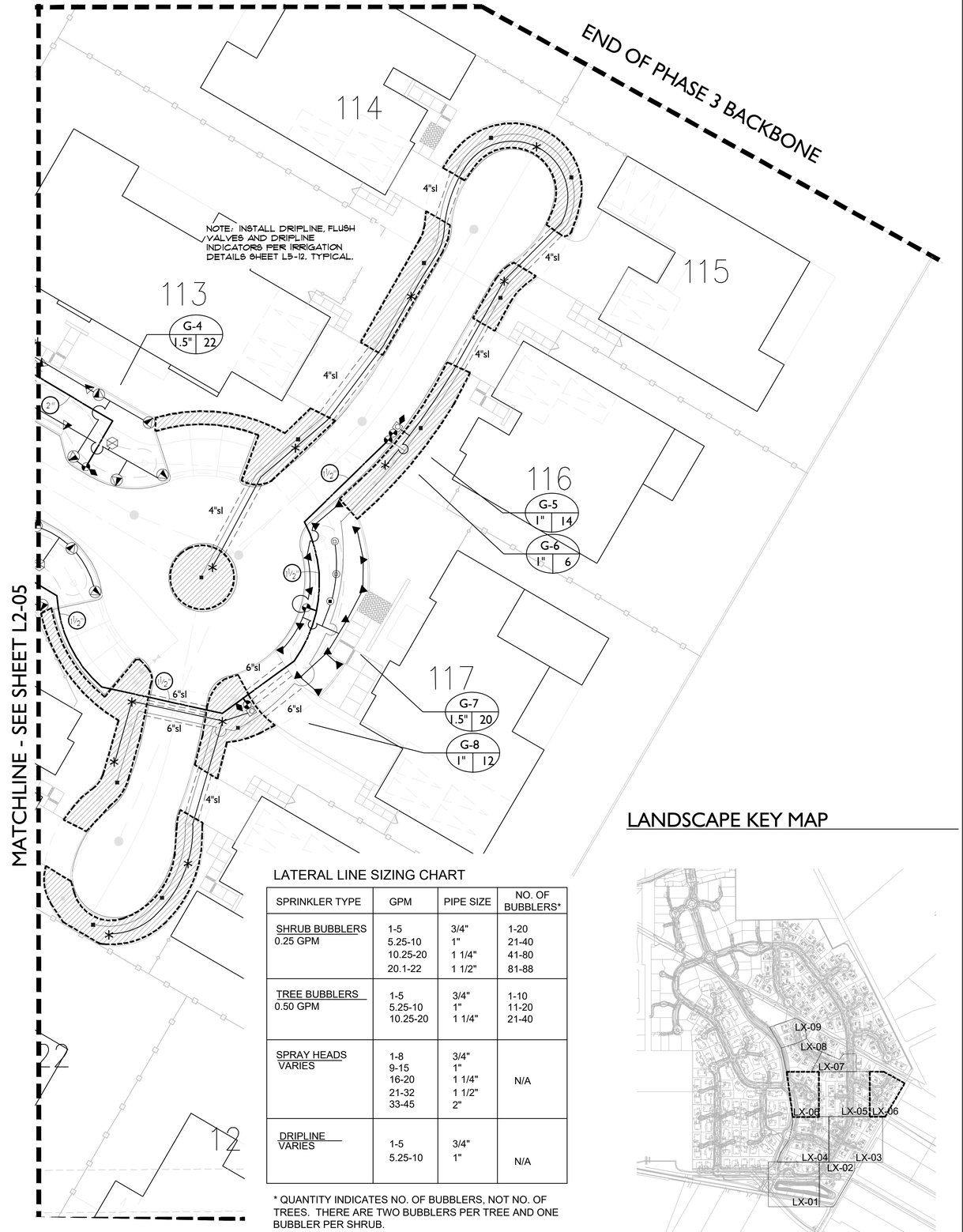

LATERAL LINE SIZING CHART

SPRINKLER TYPE	GPM	PIPE SIZE	NO. OF BUBBLERS*
SHRUB BUBBLERS 0.25 GPM	1-5 5.25-10 10.25-20 20.1-22	3/4" 1" 1 1/4" 1 1/2"	1-20 21-40 41-80 81-88
TREE BUBBLERS 0.50 GPM	1-5 5.25-10 10.25-20	3/4" 1" 1 1/4"	1-10 11-20 21-40
SPRAY HEADS VARIES	1-8 9-15 16-20 21-32 33-45	3/4" 1" 1 1/4" 1 1/2" 2"	N/A
DRIPLINE VARIES	1-5 5.25-10	3/4" 1"	N/A

* QUANTITY INDICATES NO. OF BUBBLERS, NOT NO. OF TREES. THERE ARE TWO BUBBLERS PER TREE AND ONE BUBBLER PER SHRUB.

LANDSCAPE KEY MAP

GATES +ASSOCIATES
LANDSCAPE ARCHITECTURE
LAND PLANNING · URBAN DESIGN
1655 N. MAIN ST. STE 365, WALNUT CREEK, CA 94596
T 925.736.8176 www.dgates.com

BORELLO RANCH BACKBONE PHASE 3

MORGAN HILL
CALIFORNIA

Toll Brothers

ISSUE:	DESCRIPTION:	DATE:

REGISTERED LANDSCAPE ARCHITECT
CHRISTOPHER GATES · No. 5011
6/30/2022
11/08/2021
DATE
L.A.
STATE OF CALIFORNIA

PROJECT NUMBER:	5250
DRAWN:	JG, GH
CHECK:	RC
DATE:	11/08/2021
SCALE:	1"=20'

0 10' 20' 40'

IRRIGATION PLAN

L2-06

© GATES+ASSOCIATES, INC.| 2017

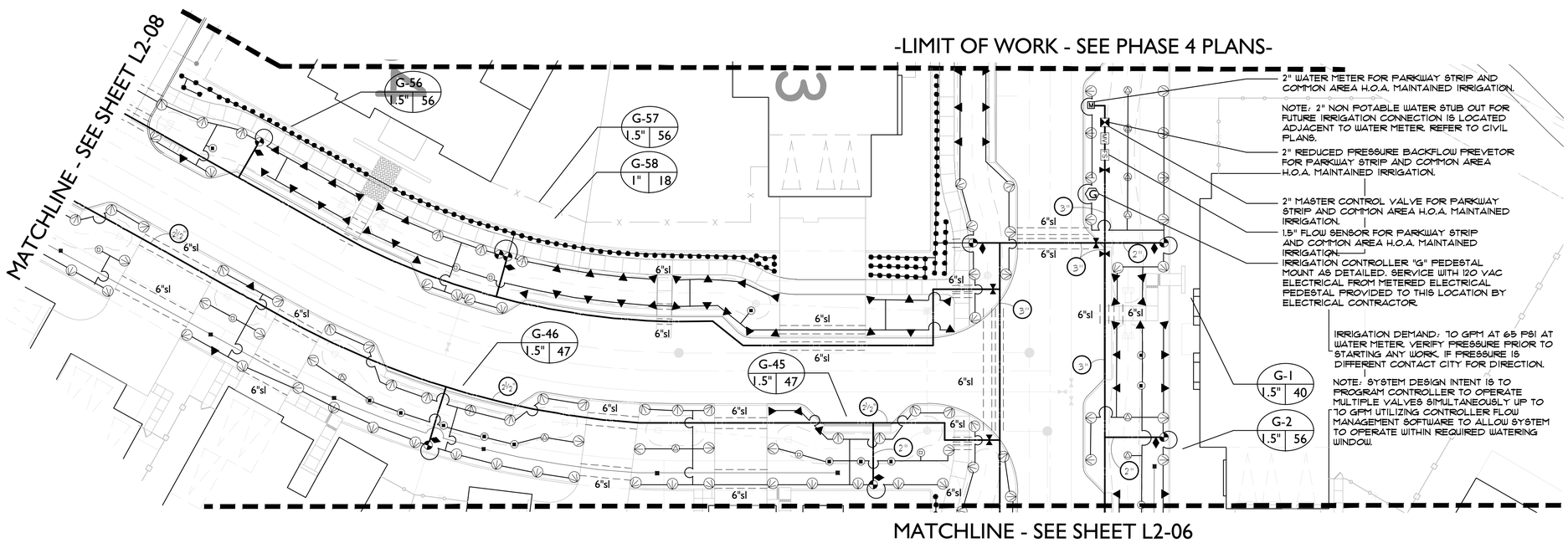

LATERAL LINE SIZING CHART

SPRINKLER TYPE	GPM	PIPE SIZE	NO. OF BUBBLERS*
SHRUB BUBBLERS 0.25 GPM	1-5 5.25-10 10.25-20 20.1-22	3/4" 1" 1 1/4" 1 1/2"	1-20 21-40 41-80 81-88
TREE BUBBLERS 0.50 GPM	1-5 5.25-10 10.25-20	3/4" 1" 1 1/4"	1-10 11-20 21-40
SPRAY HEADS VARIES	1-8 9-15 16-20 21-32 33-45	3/4" 1" 1 1/4" 1 1/2" 2"	N/A
DRIPLINE VARIES	1-5 5.25-10	3/4" 1"	N/A

* QUANTITY INDICATES NO. OF BUBBLERS, NOT NO. OF TREES. THERE ARE TWO BUBBLERS PER TREE AND ONE BUBBLER PER SHRUB.

LANDSCAPE KEY MAP

GATES
+ASSOCIATES
LANDSCAPE ARCHITECTURE
LAND PLANNING · URBAN DESIGN
1655 N. MAIN ST. STE 365, WALNUT CREEK, CA 94596
T 925.736.8176 www.dgates.com

BORELLO RANCH BACKBONE PHASE 3

MORGAN HILL
CALIFORNIA

Toll Brothers

ISSUE:	DESCRIPTION:	DATE:

REGISTERED LANDSCAPE ARCHITECT
CARRY CASE · No. 4505
6/30/2022
Renewal Date
11/08/2021
Date
L.A.
STATE OF CALIFORNIA

PROJECT NUMBER:	5250
DRAWN:	JG, GH
CHECK:	RC
DATE:	11/08/2021
SCALE:	1"=20'

0 10' 20' 40'

IRRIGATION PLAN

L2-07

© GATES+ASSOCIATES, INC.| 2017

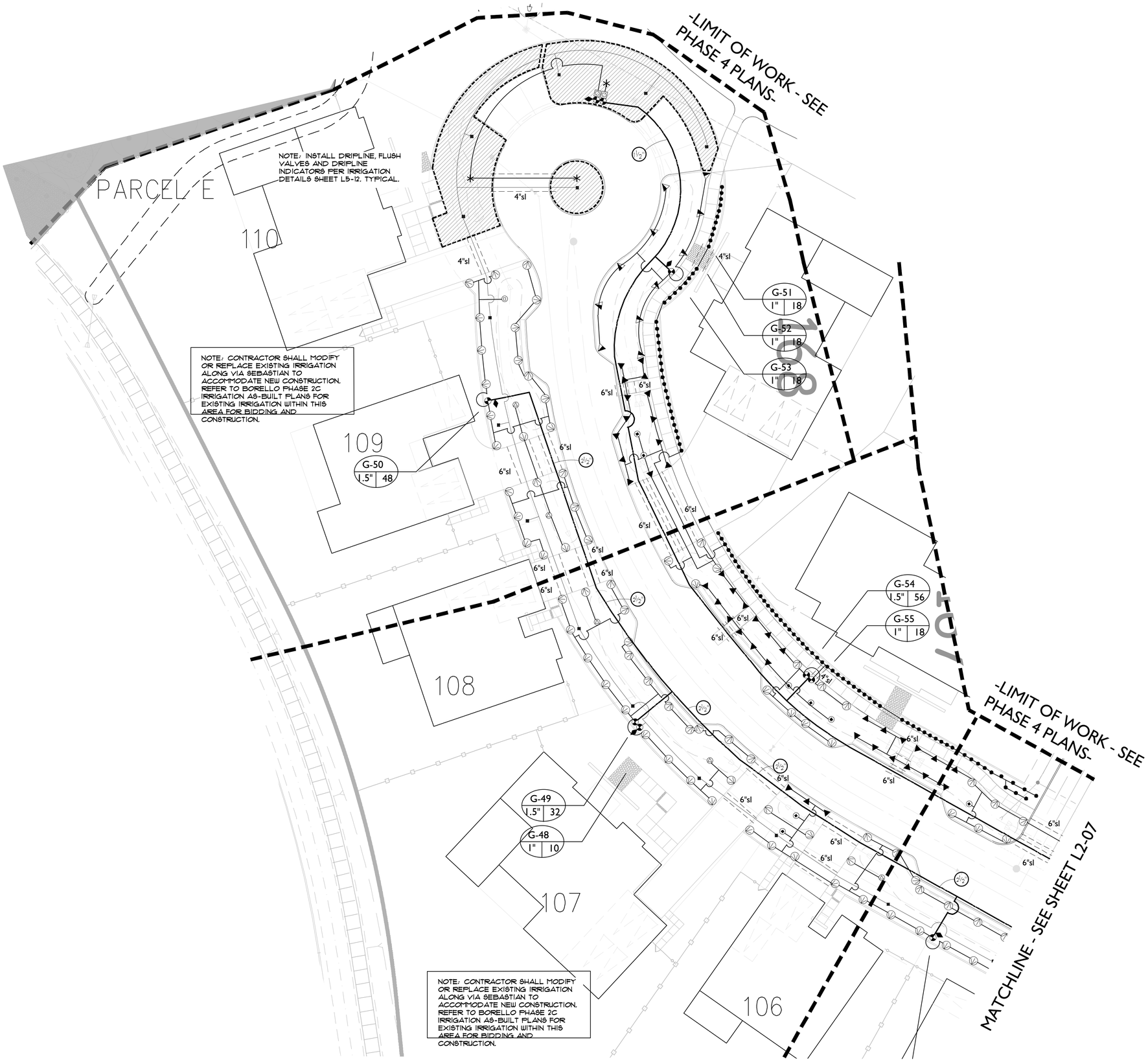

LATERAL LINE SIZING CHART

SPRINKLER TYPE	GPM	PIPE SIZE	NO. OF BUBBLERS*
SHRUB BUBBLERS 0.25 GPM	1-5 5.25-10 10.25-20 20.1-22	3/4" 1" 1 1/4" 1 1/2"	1-20 21-40 41-80 81-88
TREE BUBBLERS 0.50 GPM	1-5 5.25-10 10.25-20	3/4" 1" 1 1/4"	1-10 11-20 21-40
SPRAY HEADS VARIES	1-8 9-15 16-20 21-32 33-45	3/4" 1" 1 1/4" 1 1/2" 2"	N/A
DRIPLINE VARIES	1-5 5.25-10	3/4" 1"	N/A

* QUANTITY INDICATES NO. OF BUBBLERS, NOT NO. OF TREES. THERE ARE TWO BUBBLERS PER TREE AND ONE BUBBLER PER SHRUB.

LANDSCAPE KEY MAP

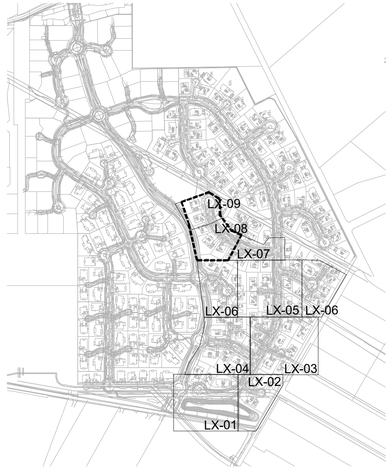

GATES +ASSOCIATES
LANDSCAPE ARCHITECTURE
LAND PLANNING · URBAN DESIGN
1655 N. MAIN ST. STE 365, WALNUT CREEK, CA 94596
T 925.736.8176 www.dgates.com

BORELLO RANCH BACKBONE PHASE 3

MORGAN HILL
CALIFORNIA

Toll Brothers

ISSUE:	DESCRIPTION:	DATE:

REGISTERED LANDSCAPE ARCHITECT
CHRIS CASE · No. 5250
5/30/2022
11/08/2021
L.A.
STATE OF CALIFORNIA

PROJECT NUMBER:	5250
DRAWN:	JG, GH
CHECK:	RC
DATE:	11/08/2021
SCALE:	1"=20'

0 10' 20' 40'

IRRIGATION PLAN

L2-08

© GATES+ASSOCIATES, INC.| 2017

IRRIGATION NOTES

1. THE CONTRACTOR SHALL REVIEW RELATED DRAWINGS AND SHALL ENSURE COORDINATION WITH ALL APPLICABLE TRADES PRIOR TO SUBMITTING BID.

2. THE IRRIGATION SYSTEM SHALL BE INSTALLED IN CONFORMANCE WITH ALL APPLICABLE STATE AND LOCAL CODES AND ORDINANCES BY LICENSED CONTRACTORS AND EXPERIENCED WORKMEN. CONTRACTOR SHALL OBTAIN AND PAY FOR ALL REQUIRED PERMITS AND FEES RELATING TO HIS WORK.

3. THIS DESIGN IS DIAGRAMMATIC. ALL PIPING, VALVES, ETC. SHOWN WITHIN PAVED AREAS IS FOR DESIGN CLARIFICATION ONLY AND SHALL BE INSTALLED IN PLANTING AREAS WHERE POSSIBLE. AVOID ANY CONFLICTS BETWEEN THE SPRINKLER SYSTEM, PLANTING AND ARCHITECTURAL FEATURES. PARALLEL PIPES MAY BE INSTALLED IN COMMON TRENCH. PIPES ARE NOT TO BE INSTALLED DIRECTLY ABOVE ONE ANOTHER.

4. DO NOT WILLFULLY INSTALL THE SPRINKLER SYSTEM AS SHOWN ON THE DRAWINGS WHEN IT IS OBVIOUS IN THE FIELD THAT OBSTRUCTIONS, GRADE DIFFERENCES OR DIFFERENCES IN THE AREA DIMENSIONS EXIST THAT MIGHT NOT HAVE BEEN CONSIDERED IN THE ENGINEERING. SUCH OBSTRUCTIONS OR DIFFERENCES SHOULD BE BROUGHT TO THE ATTENTION OF THE OWNER'S AUTHORIZED REPRESENTATIVE. IN THE EVENT THAT THIS NOTIFICATION IS NOT PERFORMED, THE IRRIGATION CONTRACTOR SHALL ASSUME FULL RESPONSIBILITY FOR ANY REVISIONS NECESSARY.

5. IT IS THE RESPONSIBILITY OF THE IRRIGATION CONTRACTOR TO FAMILIARIZE HIMSELF WITH ALL GRADE DIFFERENCES, LOCATION OF WALLS, RETAINING WALLS, ETC. HE SHALL COORDINATE HIS WORK WITH THE GENERAL CONTRACTOR AND OTHER SUBCONTRACTORS FOR THE LOCATION AND THE INSTALLATION OF PIPE SLEEVES THROUGH WALLS, UNDER ROADWAYS, PAVING, STRUCTURES, ETC. CONTRACTOR TO VERIFY THE LOCATION OF EXISTING UNDERGROUND UTILITIES AND STRUCTURES PRIOR TO THE EXCAVATION OF TRENCHES. CONTRACTOR IS TO REPAIR ANY DAMAGE CAUSED BY HIS WORK AT NO ADDITIONAL COST TO THE OWNER.

6. DUE TO THE SCALE OF THE DRAWINGS, IT IS NOT POSSIBLE TO INDICATE ALL OFFSETS, FITTINGS, SLEEVES, ETC., WHICH MAY BE REQUIRED. THE CONTRACTOR SHALL CAREFULLY INVESTIGATE THE STRUCTURAL AND FINISHED CONDITIONS AFFECTING ALL OF HIS WORK AND PLAN HIS WORK ACCORDINGLY, FURNISHING SUCH FITTINGS, ETC., AS MAY BE REQUIRED TO MEET SUCH CONDITIONS. DRAWINGS ARE GENERALLY DIAGRAMMATIC AND INDICATIVE OF THE WORK TO BE INSTALLED. THE WORK SHALL BE INSTALLED IN SUCH A MANNER AS TO AVOID CONFLICTS BETWEEN IRRIGATION SYSTEMS, PLANTING, AND ARCHITECTURAL FEATURES.

7. ELECTRICAL CONTRACTOR TO SUPPLY 120 VAC (2.5 AMP) SERVICE TO CONTROLLER LOCATION. IRRIGATION CONTRACTOR TO MAKE FINAL CONNECTION FROM ELECTRICAL STUB-OUT TO CONTROLLER. IRRIGATION CONTROL WIRE SHALL BE #14, U.L. APPROVED FOR DIRECT BURIAL. COMMON WIRE SHALL BE #12 U.L. APPROVED AND SHALL BE WHITE IN COLOR. WIRING TO INDIVIDUAL REMOTE CONTROL VALVES SHALL BE COLOR OTHER THAN WHITE.

8. REMOTE CONTROL VALVES SHALL BE WIRED TO CONTROLLER IN SEQUENCE AS SHOWN ON PLANS. RUN WIRE FROM EACH RCV TO THE CONTROLLER. SPLICING WIRES TOGETHER OUTSIDE OF VALVE BOXES WILL NOT BE PERMITTED.

9. SPLICING OF 24-VOLT WIRES WILL NOT BE PERMITTED EXCEPT IN VALVE BOXES. LEAVE A 36" COIL OF EXCESS WIRE AT EACH SPLICE AND 100 FEET ON CENTER ALONG WIRE RUN.

9. CONTROL WIRE SHALL BE RAINMASTER TW-SPLICE-14 SOLID CORE TWO WIRE CABLE FROM CONTROLLER TO EACH VALVE GROUPING LOOP 36" EXCESS WIRE INTO EACH SINGLE VALVE BOX AND INTO ONE VALVE BOX IN EACH GROUP OF VALVES. USE DIFFERENT JACKET COLOR FOR EACH SEPARATE WIRE RUN. ALL 2-WIRE CABLE SHALL BE INSTALLED WITHIN PVC CONDUIT MINIMUM 1" DIAMETER OR LARGER IF MULTIPLE CABLES ARE TO BE INSTALLED WITHIN A CONDUIT. USE DEDICATED 2-WIRE CABLES FOR EACH SIDE OF THE BACKBONE STREETSCAPE.

10. VALVE LOCATIONS SHOWN ARE DIAGRAMMATIC. INSTALL IN GROUND COVER/SHRUB AREAS WHERE POSSIBLE (NOT IN LAWN AREA.)

11. INSTALL VALVE BOXES MINIMUM 12" FROM AND PERPENDICULAR TO WALK, CURB, LAWN, BUILDING OR LANDSCAPE FEATURE. AT MULTIPLE VALVE BOX GROUPS, EACH BOX SHALL BE AN EQUAL DISTANCE FROM THE WALK, CURB, LAWN, ETC. AND EACH BOX SHALL BE MINIMUM 12" APART. SHORT SIDE OF VALVE BOXES SHALL BE PARALLEL TO WALK, CURB, LAWN, ETC.

12. ALL SPRINKLER HEADS SHALL BE SET PERPENDICULAR TO FINISH GRADE OF THE AREA TO BE IRRIGATED UNLESS OTHERWISE DESIGNATED ON THE PLANS.

13. IN LOCATIONS WHERE LOW HEAD DRAINAGE WILL CAUSE EROSION AND EXCESS WATER, USE POP-UP SPRINKLER MODELS WITH INTEGRAL CHECK VALVE. FOR DRIP OR BUBBLER CIRCUITS, INSTALL KING BROS. CV SERIES CHECK VALVES IN LATERAL LINES FOR EVERY 10' OF ELEVATION CHANGE.

14. THE IRRIGATION CONTRACTOR SHALL FLUSH AND ADJUST ALL SPRINKLER HEADS FOR OPTIMUM PERFORMANCE AND TO PREVENT OVERSPRAY ONTO WALKS, ROADWAYS AND/OR BUILDINGS AS MUCH AS POSSIBLE. THIS SHALL INCLUDE SELECTING THE BEST DEGREE OF FIXED ARC (OR AN ADJUSTABLE ARC IF FIXED ARC DOES NOT MATCH THE ARC TO BE IRRIGATED) TO FIT THE SITE CONDITIONS AND TO THROTTLE THE FLOW CONTROL AT EACH VALVE TO OBTAIN THE OPTIMUM OPERATING PRESSURE FOR EACH SYSTEM. ALL MAIN LINES SHALL BE FLUSHED PRIOR TO THE INSTALLATION OF IRRIGATION HEADS. AT 30 DAYS AFTER INSTALLATION EACH SYSTEM SHALL BE FLUSHED TO ELIMINATE GLUE AND DIRT PARTICLES FROM THE LINES.

15. WHEN VERTICAL OBSTRUCTIONS (STREET LIGHTS, TREES, FIRE HYDRANTS, ETC.) INTERFERE WITH THE SPRAY PATTERN OF THE HEADS SO AS TO PREVENT PROPER COVERAGE, THE IRRIGATION CONTRACTOR SHALL FIELD ADJUST THE SPRINKLER SYSTEM SO AS TO PROVIDE PROPER COVERAGE. ALL ADJUSTMENTS SHALL BE MADE AT NO ADDITIONAL COST TO THE OWNER.

16. NOTIFY ARCHITECT OF ANY ASPECTS OF LAYOUT THAT WILL PROVIDE INCOMPLETE OR INSUFFICIENT WATER COVERAGE OF PLANT MATERIAL AND DO NOT PROCEED UNTIL HIS INSTRUCTIONS ARE OBTAINED.

17. LOCATE BUBBLERS ON UPHILL SIDE OF TREES. TREE BUBBLERS ARE FOR ESTABLISHMENT AND DROUGHT CONDITIONS. THEY ARE TO BE TURNED OFF AFTER TREES ARE ESTABLISHED AND TURNED ON DURING DROUGHT CONDITIONS.

18. IN ADDITION TO THE SLEEVES AND CONDUITS SHOWN ON THE DRAWINGS, THE IRRIGATION CONTRACTOR SHALL BE RESPONSIBLE FOR COORDINATING THE INSTALLATION OF SLEEVES AND CONDUITS OF SUFFICIENT SIZE UNDER ALL PAVED AREAS.

19. ALL EXCAVATIONS ARE TO BE FILLED WITH COMPACTED BACKFILL. CONTRACTOR TO REPAIR ALL SETTLED TRENCHES PROMPTLY, FOR A PERIOD OF 1 YEAR AFTER COMPLETION OF WORK. ADDITIONALLY, CONTRACTOR SHALL WARRANT THAT THE IRRIGATION SYSTEM WILL BE FREE FROM DEFECTS IN MATERIALS AND WORKMANSHIP FOR A PERIOD OF 1 YEAR AFTER FINAL ACCEPTANCE OF WORK.

20. WHERE IT IS NECESSARY TO EXCAVATE ADJACENT TO EXISTING TREES, THE CONTRACTOR SHALL USE ALL POSSIBLE CARE TO AVOID INJURY TO TREES, AND TREE ROOTS. EXCAVATION IN AREAS WHERE 2 INCH AND LARGER ROOTS OCCUR SHALL BE DONE BY HAND. ROOTS 2 INCHES AND LARGER IN DIAMETER SHALL BE WRAPPED IN A PLASTIC BAG AND SECURED WITH A RUBBER BAND. TRENCHES ADJACENT TO TREE SHOULD BE CLOSED WITHIN 24 HOURS; WHERE THIS IS NOT POSSIBLE, THE SIDE OF THE TRENCH ADJACENT TO THE TREE SHALL BE KEPT SHADED WITH BURLAP OR CANVAS.

21. THE SPRINKLER SYSTEM DESIGN IS BASED ON THE MINIMUM OPERATING PRESSURE SHOWN ON THE IRRIGATION DRAWINGS. THE IRRIGATION CONTRACTOR SHALL VERIFY WATER PRESSURE PRIOR TO CONSTRUCTION. REPORT ANY DIFFERENCE BETWEEN THE WATER PRESSURE INDICATED ON THE DRAWINGS AND THE ACTUAL PRESSURE READING AT THE IRRIGATION POINT OF CONNECTION TO THE OWNER'S AUTHORIZED REPRESENTATIVE.

22. OPERATE IRRIGATION CONTROLLER(S) BETWEEN THE HOURS OF 10:00 PM AND 7:00 AM.

23. IRRIGATION CONTRACTOR TO NOTIFY ALL LOCAL JURISDICTIONS FOR INSPECTION AND TESTING OF INSTALLED BACKFLOW PREVENTION DEVICE.

24. THE CONTRACTOR SHALL NOTIFY UNDERGROUND SERVICE ALERT AT 811 AT LEAST 48 HOURS PRIOR TO ANY EXCAVATION.

26. CONTRACTOR SHALL PRESSURE TEST ALL MAINLINE PIPE AS FOLLOWS:
A. NOTIFY ARCHITECT AT LEAST THREE (3) DAY IN ADVANCE OF TESTING.
B. PERFORM TESTING AT HIS OWN EXPENSE.
C. CENTER LOAD PIPING WITH SMALL AMOUNT OF BACKFILL TO PREVENT ARCHING OR SLIPPING UNDER PRESSURE. NO FITTING SHALL BE COVERED.
D. APPLY THE FOLLOWING TESTS AFTER WELD PLASTIC PIPE JOINTS HAVE CURED AT LEAST 24 HOURS. 1. TEST LIVE (CONSTANT PRESSURE) AND QUICK COUPLER LINE HYDROSTATICALLY AT 125 PSI. MINIMUM. LINES WILL BE APPROVED IF TEST PRESSURE IS MAINTAINED FOR SIX (6) HOURS. THE LINE WILL BE APPROVED OR NOT APPROVED AS SUCH RESULTS MAY INDICATE. THE CONTRACTOR SHALL MAKE TESTS AND REPAIRS AS NECESSARY UNTIL TEST CONDITIONS ARE MET. 2. TEST RCV CONTROLLED LATERAL LINES WITH WATER AT LINE PRESSURE AND VISUALLY INSPECT FOR LEAKS. RETEST AFTER CORRECTING DEFECTS.

27. HIGH EFFICIENCY ADJUSTABLE ARC STREAM AND FAN SPRAY HEADS HAVE BEEN SPECIFIED TO ALLOW THE IRRIGATION SYSTEM TO BE ADJUSTED SO THAT THERE IS NO OVERSPRAY OUTSIDE THE LANDSCAPE AREAS. CONTRACTOR SHALL ADJUST ALL SPRAY HEADS SO THERE IS NO OVERSPRAY ONTO PAVING AND SHALL BE CONFORMED DURING COVERAGE TEST. TYPICAL ALL LOCATIONS

IRRIGATION LEGEND

SYMBOL	MODEL NUMBER	DESCRIPTION	PSI	GPM	RADIUS
	5012-FC-SAM-5.0 (360°)	RAINBIRD 12" POP-UP FULL CIRCLE ROTOR	45	5.0	40'-45'
	5012-FC-SAM-5.0 (40°-270°)	RAINBIRD 12" POP-UP PART CIRCLE ROTOR	45	5.0	40'-45'
	5012-FC-SAM-2.0 (360°)	RAINBIRD 12" POP-UP FULL CIRCLE ROTOR	45	2.0	40'-45'
	5012-FC-SAM-2.0 (40°-270°)	RAINBIRD 12" POP-UP PART CIRCLE ROTOR	45	2.0	40'-45'
	1812-PRS45-SAM-R17-24F	RAINBIRD 12" POP-UP SPRAY HEAD WITH PRESSURE REGULATOR, CHECK VALVE AND 360° STREAM NOZZLES	45	4.0	17'-24'
	1812-PRS45-SAM-RVAN1724	RAINBIRD 12" POP-UP SPRAY HEAD WITH PRESSURE REGULATOR, CHECK VALVE AND ADJUSTABLE ARC STREAM NOZZLES	45	2.0	17'-24'
	1812-PRS45-SAM-R13-18F	RAINBIRD 12" POP-UP SPRAY HEAD WITH PRESSURE REGULATOR, CHECK VALVE AND 360° STREAM NOZZLES	45	2.0	13'-18'
	1812-PRS45-SAM-R13-18H	RAINBIRD 12" POP-UP SPRAY HEAD WITH PRESSURE REGULATOR, CHECK VALVE AND ADJUSTABLE ARC STREAM NOZZLES	45	1.0	13'-18'
	1812-PRS-SAM-15F	RAINBIRD 12" POP-UP SPRAY HEAD WITH PRESSURE REGULATOR, CHECK VALVE AND 360° MPR NOZZLES	30	4.0	15'
	1812-PRS-SAM-HE-VAN-15	RAINBIRD 12" POP-UP SPRAY HEAD WITH PRESSURE REGULATOR, CHECK VALVE AND HIGH EFFICIENCY VARIABLE ARC NOZZLES	30	2.0	15'
	1812-PRS-SAM-12F	RAINBIRD 12" POP-UP SPRAY HEAD WITH PRESSURE REGULATOR, CHECK VALVE AND 360° MPR NOZZLES	30	3.0	12'
	1812-PRS-SAM-HE-VAN-12	RAINBIRD 12" POP-UP SPRAY HEAD WITH PRESSURE REGULATOR, CHECK VALVE AND HIGH EFFICIENCY VARIABLE ARC NOZZLES	30	1.5	12'
	1812-PRS-SAM-10F	RAINBIRD 12" POP-UP SPRAY HEAD WITH PRESSURE REGULATOR, CHECK VALVE AND 360° MPR NOZZLES	30	2.0	10'
	1812-PRS-SAM-HE-VAN-10	RAINBIRD 12" POP-UP SPRAY HEAD WITH PRESSURE REGULATOR, CHECK VALVE AND HIGH EFFICIENCY VARIABLE ARC NOZZLES	30	1.0	10'
	1806-PRS30-SAM-15 F,H,Q	RAINBIRD 6" POP-UP SPRAY HEAD WITH MPR SERIES NOZZLES	30	3.7, 1.9, .90	15'
	1806-PRS30-SAM-12 F,H,Q	RAINBIRD 6" POP-UP SPRAY HEAD WITH MPR SERIES NOZZLES	30	2.6, 1.3, .70	12'
	1401	RAINBIRD BUBBLER ON FLEX RISER FOR SHRUBS	30	.25 GPM	
	RWS-M-B-C-1401	RAINBIRD ROOT 18" WATERING BUBBLER ASSEMBLY. INSTALL 2 WATERING TUBES WITH BUBBLERS PER TREE EACH TREE ON OPPOSITE SIDES OF ROOTBALL.	30	.25/.25 GPM	
	33DNP	RAIN BIRD 3/4" QUICK COUPLING VALVE WITH PURPLE LOCKING COVER			
	1-1201-1151-8130 PMR-MF-30-1"	AMIAD 1" FILTER WITH 130 MESH SCREEN WITH SENNINGER 1" IN-LINE PRESSURE REDUCING VALVE (1-22 GPM)			
	PESBR SERIES	RAINBIRD REMOTE CONTROL SCRUBBER VALVE FUR USE WITH NON POTABLE WATER			
	T-113-IRR	NIBCO GATE VALVE (LINE SIZE) IN ROUND BOX			
	825Y-BV / 650 SERIES	FEBCO BACKFLOW PREVENTOR WITH FEBCO WYE STRAINER INSIDE STRONG BOX ENCLOSURE WITH POLAR PARKA BACKFLOW FREEZE PROTECTION COVER. SEE PLANS FOR SIZE.			
	FS-150-3100-2"	RAINMASTER FLOW SENSOR WITH SUPERIOR NORMALLY OPEN MASTER VALVE. WIRE FLOW SENSOR TO CONTROLLER WITH RAINMASTER EV-CAB-SEN COMMUNICATION CABLE AND WIRE MASTER VALVE WITH TW-CAB-14 TWO WIRE CABLE INSIDE 1" PVC CONDUIT.			
G	EGP-TWi-PSB PROMAX	RAINMASTER EAGLE PLUS SERIES 2-WIRE ET BASED SELF ADJUSTING CONTROLLER WITH UP TO 200 STATION CAPACITY. CONTROLLER SHALL INCLUDE i-CENTRAL ET CARD FOR ET OPERATION. CONTROLLER TO BE MOUNTED INSIDE VIT STRONG BOX SB16 SLANT TOP STAINLESS STEEL PEDESTAL MOUNT ENCLOSURE. CONTROLLERS SHALL BE WIRED TO FLOW SENSOR WITH RAINMASTER EV-CAB-SEN COMMUNICATION CABLE AND WIRED TO MASTER VALVE WITH #14 LOW VOLTAGE WIRE. INSTALL FLOW SENSOR AND SUPERIOR NORMALLY OPEN MASTER VALVE AS SHOWN ON PLANS. INCLUDE RAINMASTER MAINTENANCE REMOTE. CONTROLLER COMES WITH 2 YEAR ET SUBSCRIPTION. INCLUDE IRRITROL RAIN SENSOR INSIDE STRONG BOX SS SENSOR ENCLOSURE TO BE MOUNTED ON CONTROLLER PEDESTAL AND WIRE TO CONTROLLER PER MANUFACTURERS INSTRUCTIONS.			
*		PIPE CONTINUATION SYMBOL AFTER CONTROL VALVE AND FILTER ASSEMBLY FOR SUBSURFACE DRIP TUBING, TYPICAL. REFER TO DRIP TUBING PIPE CONFIGURATION DETAILS.			
		IRRIGATION INSIDE DASHED OUTLINE AREA: NETAFIM TECHLINE DRIP EMITTER TUBING WITH INTERNAL CHECK VALVE #: TLVC6-1810 0.60 GPH EMITTERS 18" ON CENTER DRIPLINE PIPE WITH NETAFIM BARBED FITTINGS INSTALLED 4" COVER. INSTALL DRIPLINE PER INSTALLATION DETAILS			
G-24		STATION NUMBER			
1.5" 50		GALLONS PER MINUTE			
		VALVE SIZE			
		MAINLINE: 2.5" AND LARGER: CL315 PVC PURPLE PIPE. 2" AND SMALLER" SCHEDULE 40 PVC PURPLE PLASTIC PIPE. FITTINGS SHALL BE SCHEDULE 40 PVC SOLVENT WELD. 18" COVER. ALL PIPE SHALL BE PURPLE FOR USE WITH NON POTABLE WATER.			
		LATERAL LINE: 1120-CLASS 200 PURPLE PVC PLASTIC PIPE WITH SCHEDULE 40 PVC SOLVENT WELD FITTINGS. 12" COVER. ALL PIPE SHALL BE PURPLE FOR USE WITH NON POTABLE WATER.			
		SLEEVE:1120-200 PSI PVC PLASTIC PIPE WITH SCHEDULE 40 PVC PLASTIC FITTINGS. 24" COVER. SIZE NOTED ON PLANS.			

GATES +ASSOCIATES
LANDSCAPE ARCHITECTURE
LAND PLANNING · URBAN DESIGN
1655 N. MAIN ST. STE 365, WALNUT CREEK, CA 94596
T 925.736.8176 www.dgates.com

BORELLO RANCH BACKBONE PHASE 3
MORGAN HILL CALIFORNIA

Toll Brothers

ISSUE:	DESCRIPTION:	DATE:

REGISTERED LANDSCAPE ARCHITECT
CHRIS CASE
9/30/2022
11/08/2021
L.A.
STATE OF CALIFORNIA

PROJECT NUMBER:	5250
DRAWN:	JG, GH
CHECK:	RC
DATE:	11/08/2021
SCALE:	1"=20'

0 10' 20' 40'

IRRIGATION NOTES AND LEGEND

L2-09

© GATES+ASSOCIATES, INC.| 2017

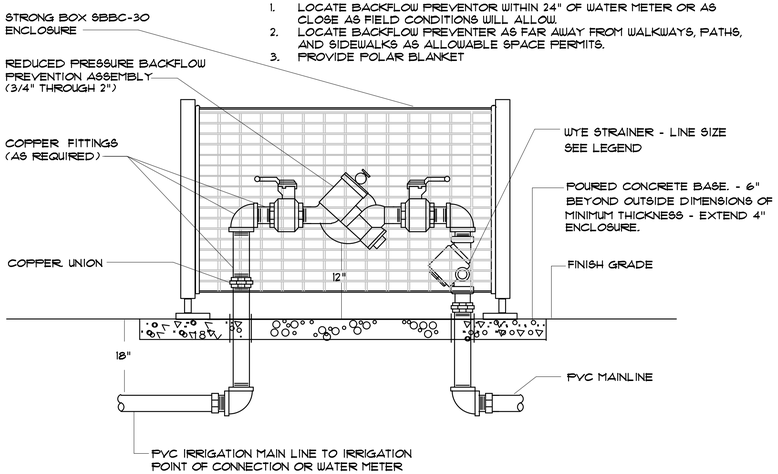

1. LOCATE BACKFLOW PREVENTOR WITHIN 24" OF WATER METER OR AS CLOSE AS FIELD CONDITIONS WILL ALLOW.
2. LOCATE BACKFLOW PREVENTER AS FAR AWAY FROM WALKWAYS, PATHS, AND SIDEWALKS AS ALLOWABLE SPACE PERMITS.
3. PROVIDE POLAR BLANKET

1 BACKFLOW ASSEMBLY
NTS

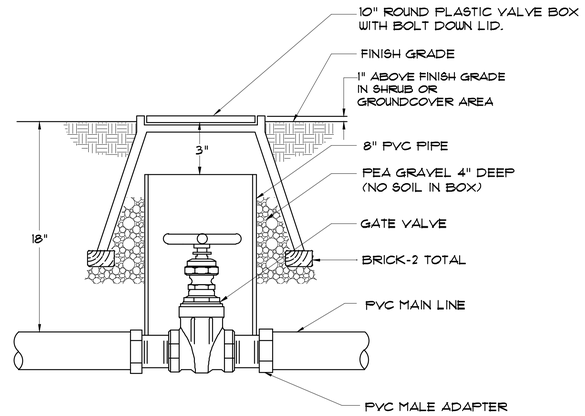

2 GATE VALVE INSTALLATION
NTS

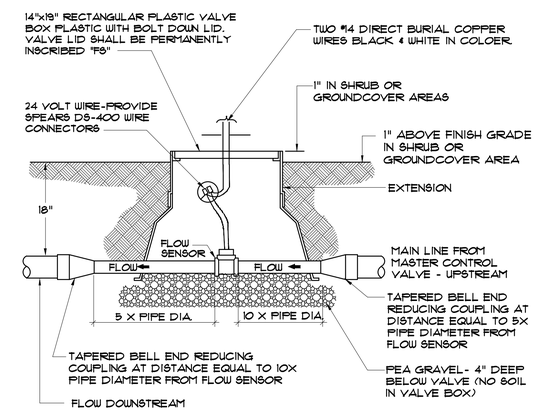

3 FLOW SENSOR INSTALLATION
NTS

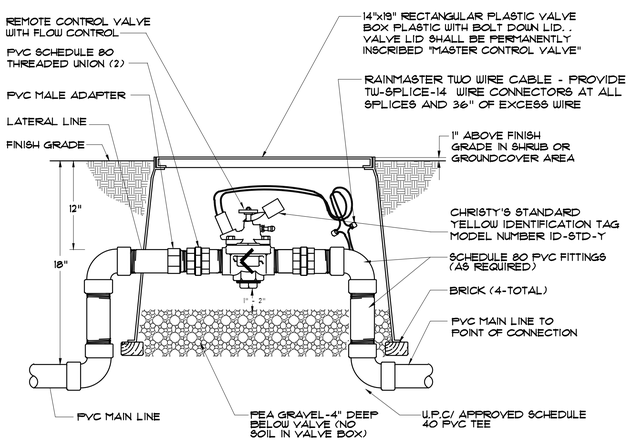

4 MASTER CONTROL VALVE INSTALLATION
NTS

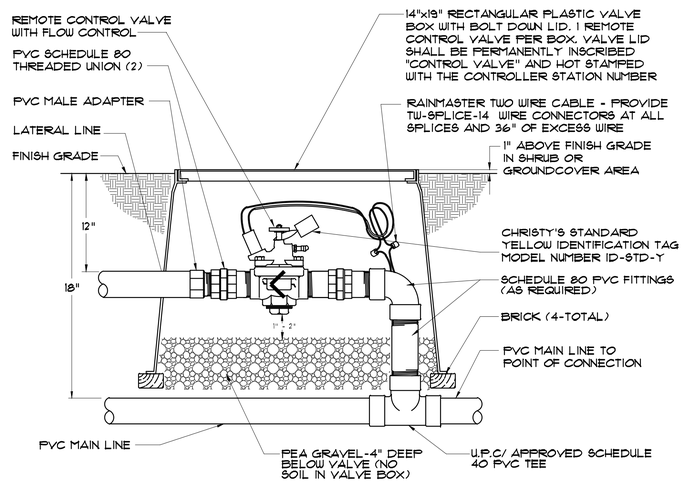

5 REMOTE CONTROL VALVE INSTALLATION
NTS

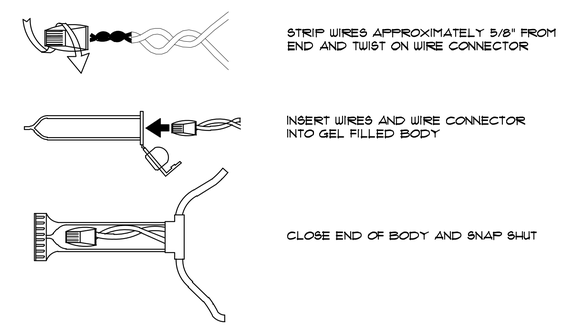

5 TW-SPLICE-14 WIRE CONNECTION
NTS

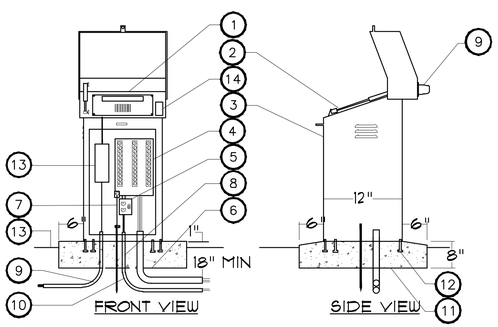

6 PEDESTAL MOUNT CONTROLLER INSTALLATION
NTS

1. HYDROPOINT WEATHERTRAK ETPRO3 2-WIRE SERIES CONTROLLER PANEL MOUNTED FLUSH ON FACE OF ENCLOSURE AT 25 DEGREE ANGLE FOR EASY ACCESS AND VIEWING.
2. PISTON CONNECTED TO FLIP TOP.
3. STRONG BOX WIDE STAINLESS STEEL CONTROLLER ENCLOSURE HYDROPOINT MODEL NUMBER STW.
4. STRONG BOX CONTROLLER SUBASSEMBLY
5. GFI OUTLET AND SWITCH.
6. SCHEDULE 40 GREY PVC ELECTRICAL CONDUITS WITH SWEEP ELL FOR LOW VOLTAGE WIRES.
7. #8 AWG GROUNDING WIRE
8. 120 VOLT ELECTRICAL SERVICE PER LOCAL CODES.
9. CABINET MOUNTED ANTENNA
10. 5/8" X 8' LONG COPPER CLAD GROUNDING ROD (INSIDE ENCLOSURE)
11. 4" THICK CONCRETE SLAB OVER 4" COMPACTED AGGREGATE BASE. EXTEND 6" BEYOND ALL SIDES OF ENCLOSURE.
12. STEEL TEMPLATE WITH MOUNTING BOLTS ATTACHED (INCLUDED WITH WITH ENCLOSURE) SET IN CONCRETE BASE.
13. FINISH GRADE.
14. RECYCLED WATER DECAL PER DSRSD STANDARDS.
15. WATERPROOF CONNECTORS FOR ALL TWO WIRE SYSTEM SPLICES, 3M DBY-6. TWO WIRE CABLE FOR CONTROLLER PAIGE P1389D 14-2UF DOUBLE JACKET CABLE
17. INSTALL HYDROPOINT DECODERS FOR ALL CONTROL VALVES CONNECTED TO TWO WIRE CONTROLLER PER MANUFACTURERS SPECIFICATIONS.
18. INSTALL HYDROPOINT LINE SURGE ARRESTORS PER MANUFACTURERS DIRECTION FOR TWO WIRE SYSTEMS
19. HYDROPOINT IRRIGATION CONTROLLER IS E.T. BASED SELF ADJUSTING. CONTRACTOR SHALL INPUT ALL REQUIRED DATA INTO CONTROLLERS TO ALLOW SELF SCHEDULING INCLUSIVE OF PLANT SPECIES, PLANT WATER REQUIREMENTS, EXPOSURE, SOIL TYPE, SLOPE, IRRIGATION TYPE AND IRRIGATION EFFICIENCY.
20. DECODER GROUNDING SHALL BE PROVIDED EVERY 800' OR EVERY 8 DECODERS WHICHEVER IS SMALLER, ANY SPUR OVER 50 FEET AND AT ENDS OF COMMUNICATION WIRE PATHS. GROUND WITH A 8' GROUNDING ROD. INCLUDE A SURGE ARRESTOR AT EACH GROUNDING LOCATION. A SPLIT BOLT CONNECTION TO BE USED TO CONNECT THE SURGE DEVICE TO THE GROUND WIRE WITH DBRY-6 WATERPROOF CONNECTOR.

7 PEDESTAL MOUNT CONTROLLER NOTES
NTS

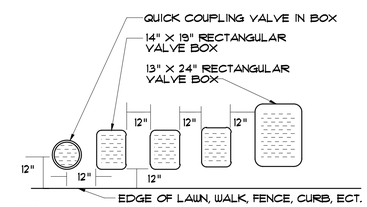

NOTES:

1. CENTER BOX OVER REMOTE CONTROL VALVE TO FACILITATE SERVICING VALVE.
2. SET BOXES 1" ABOVE FINISH GRADE IN GROUND COVER/SHRUB AREA AND FLUSH WITH FINISH GRADE IN TURF AREA.
3. SET RCV AND VALVE BOX ASSEMBLY IN GROUND COVER/SHRUB AREA WHERE POSSIBLE. INSTALL IN LAWN AREA ONLY IF GROUND COVER DOES NOT EXIST ADJACENT TO LAWN.
4. SET BOXES PARALLEL TO EACH OTHER AND PERPENDICULAR TO EDGE.
5. AVOID HEAVILY COMPACTING SOIL AROUND VALVE BOX EDGES TO PREVENT COLLAPSE AND DEFORMATION OF VALVE BOX SIDES.
6. ALL VALVE BOXES SHALL HAVE BOLT DOWN LIDS.
7. VALVE LID SHALL BE PERMANENTLY INSCRIBED "CONTROL VALVE" AND HOT STAMPED WITH THE CONTROLLER STATION NUMBER.

8 VALVE BOX INSTALLATION
NTS

GATES +ASSOCIATES
LANDSCAPE ARCHITECTURE
LAND PLANNING · URBAN DESIGN
1655 N. MAIN ST. STE 365, WALNUT CREEK, CA 94596
T 925.736.8176 www.dgates.com

BORELLO RANCH BACKBONE PHASE 3
MORGAN HILL CALIFORNIA

Toll Brothers

ISSUE:	DESCRIPTION:	DATE:

REGISTERED LANDSCAPE ARCHITECT · CHRISTOPHER GATES · NO. 4015 · 6/30/2022 · Renewal Date · 11/08/2021 · Date · L.A. · STATE OF CALIFORNIA

PROJECT NUMBER:	5250
DRAWN:	JG, GH
CHECK:	RC
DATE:	11/08/2021
SCALE:	1"=20'

0 10' 20' 40'

IRRIGATION DETAILS

L2-10

© GATES+ASSOCIATES, INC.| 2017

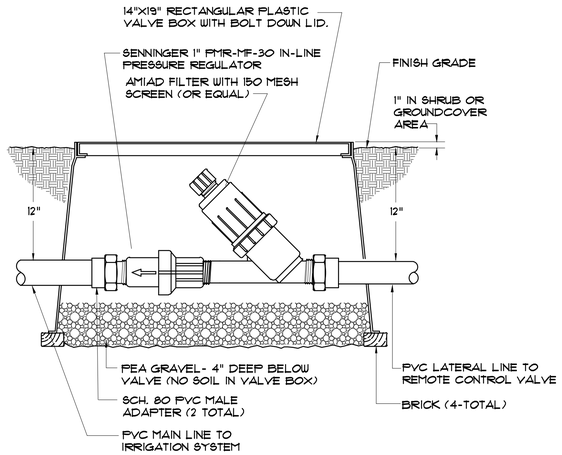

9 DRIP REMOTE CONTROL VALVE ASSEMBLY
NTS

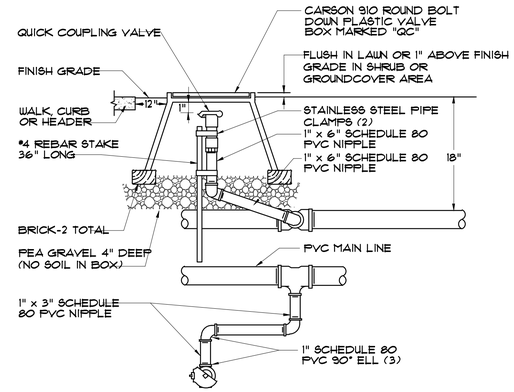

10 3/4" QUICK COUPLER IN BOX
NTS

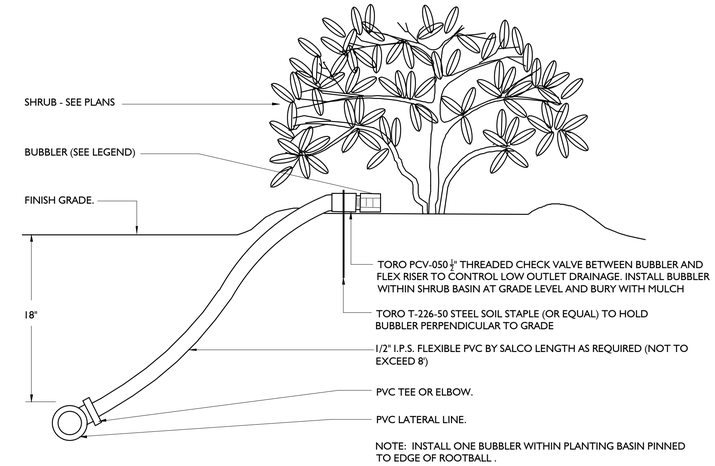

11 SHRUB BUBBLER INSTALLATION
NTS

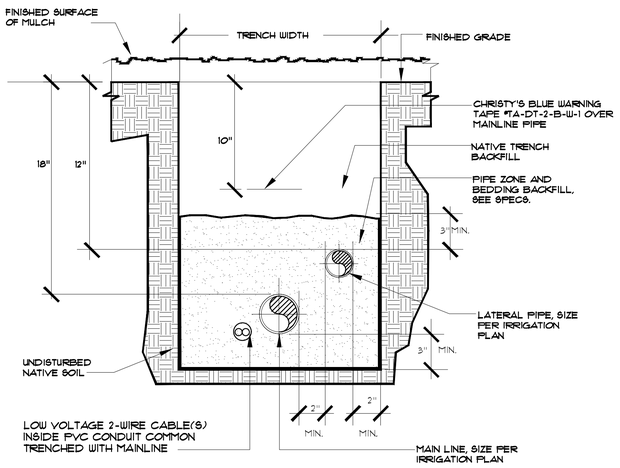

12 TYPICAL COMBINATION TRENCH
NTS

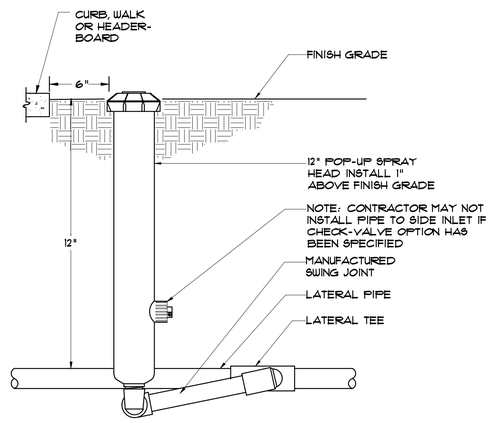

13 POP-UP 12" SPRAY HEAD INSTALLATION
NTS

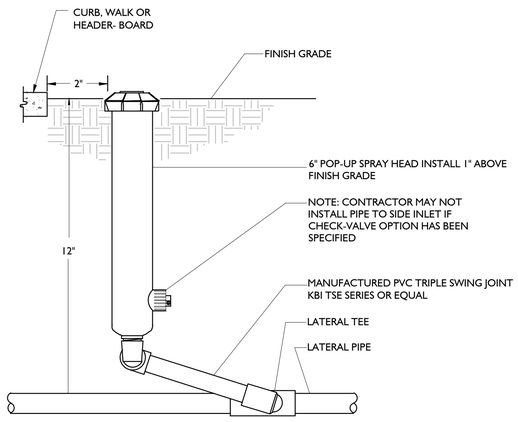

14 POP-UP 6" SPRAY HEAD INSTALLATION
NTS

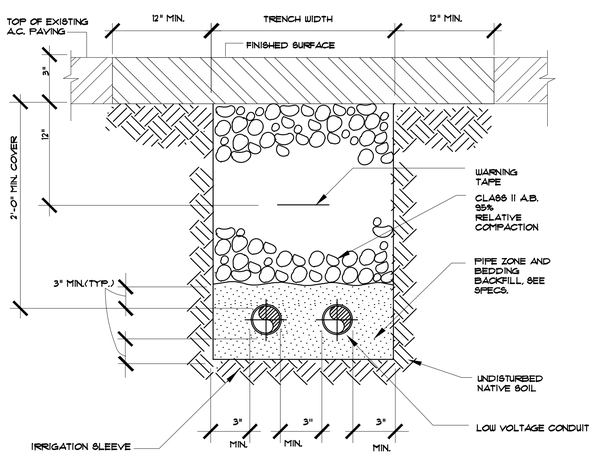

15 SLEEVE TRENCH DETAIL UNDER ROADWAY
NTS

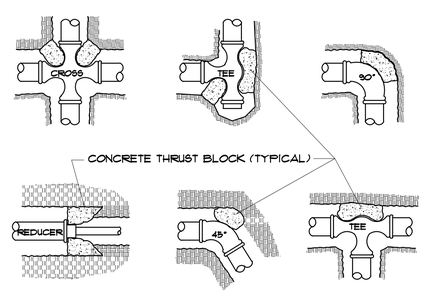

NOTES:

1. SUPPLY LINES 2.5"& 3" IN DIAMETER SHALL RECEIVE CONCRETE THRUST BLOCKS.
2. SUPPLY LINES OVER 3" SHALL HAVE IRON DUCTILE RESTRAINT SYSTEM.
3. A MINIMUM OF 6" OF CONCRETE SHALL BE POURED ON VIRGIN OR COMPACTED SOIL BENEATH EACH INSTALLATION.
4. CONCRETE SHALL BE 3 SACK MIX SLURRY CONTAINING NO GRAVEL.
5. WHERE CONCRETE AND PVC ARE IN CONTACT TOGETHER PVC SHALL BE PROTECTED WITH PIPE WRAP.

16 THRUST BLOCK INSTALLATION
NTS

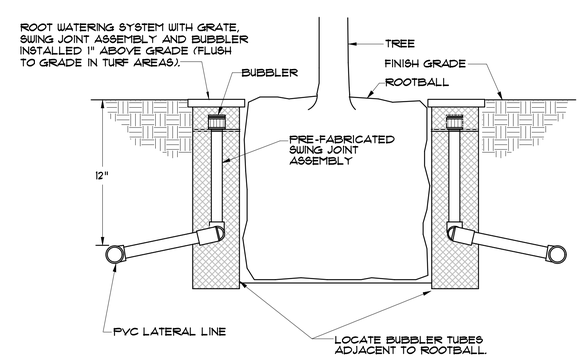

NOTES:
1. BUBBLER TREE TO BE PLACED UPHILL SIDE OF ROOTBALL. INSTALL 2 BUBBLERS PER EACH TREE.

TREE BUBBLER INSTALLATION
NTS

GATES +ASSOCIATES
LANDSCAPE ARCHITECTURE
LAND PLANNING · URBAN DESIGN
1655 N. MAIN ST. STE 365, WALNUT CREEK, CA 94596
T 925.736.8176 www.gates.com

BORELLO RANCH BACKBONE PHASE 3

MORGAN HILL
CALIFORNIA

Toll Brothers

ISSUE:	DESCRIPTION:	DATE:

REGISTERED LANDSCAPE ARCHITECT
CHRISTOPHER NOE · No. 5250
5/30/2022
Date
11/08/2021
L.A.
STATE OF CALIFORNIA

PROJECT NUMBER:	5250
DRAWN:	JG, GH
CHECK:	RC
DATE:	11/08/2021
SCALE:	1"=20'

0 10' 20' 40'

IRRIGATION DETAILS

L2-11

© GATES+ASSOCIATES, INC.| 2017

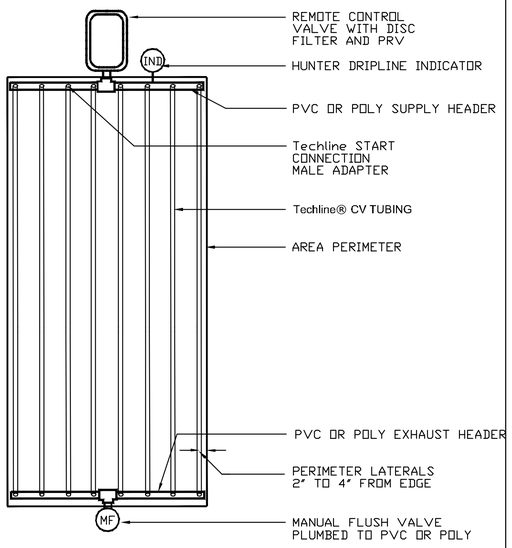

18 Techline® CV END FEED LAYOUT

DETAIL - NO SCALE

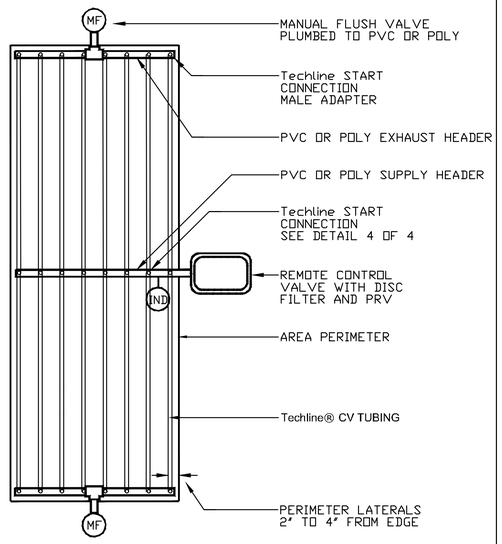

19 Techline® CV CENTER FEED LAYOUT

DETAIL - NO SCALE

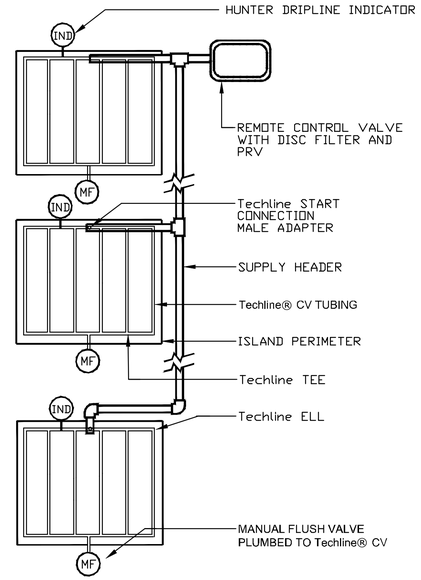

20 Techline® CV ISLAND LAYOUT

DETAIL - NO SCALE

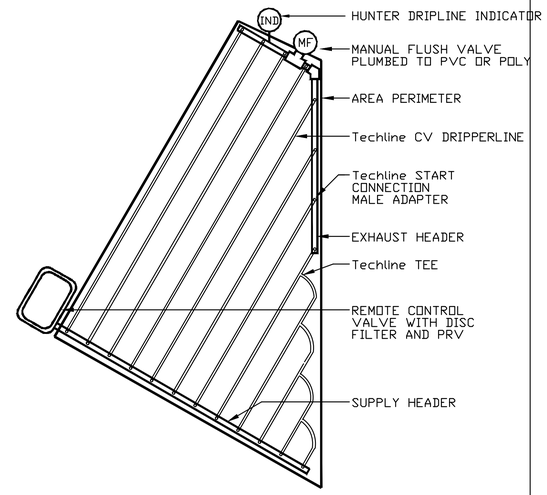

21 Techline CV IRREGULAR AREAS: TRIANGULAR

DETAIL - NO SCALE

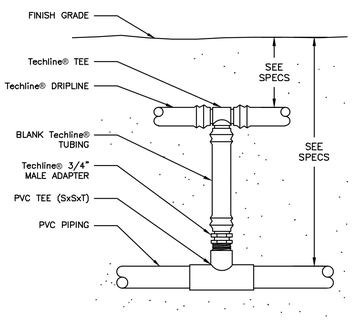

22 Techline® START CONNECTION (PVC TO TEE)

NOT TO SCALE

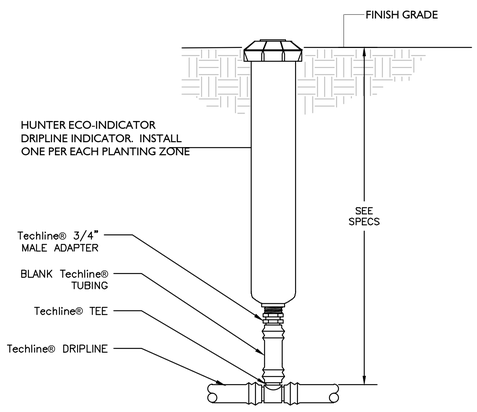

23 DRIPLINE OPERATION INDICATOR INSTALLATION

NTS

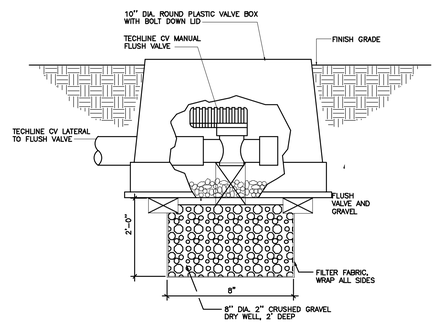

24 FLUSH VALVE INSTALLATION

NTS

SUBSURFACE IRRIGATION INSTALLATION NOTES:

1. ASSEMBLE AND INSTALL FILTER, REMOTES CONTROL VALVE AND PRESSURE REGULATING VALVE ASSEMBLIES ACCORDING TO DETAILS.

2. ASSEMBLE AND INSTALL SUPPLY HEADERS ACCORDING TO DETAIL. TAPE OR PLUG OPEN CONNECTIONS TO PREVENT DEBRIS CONTAMINATION.

3. ASSEMBLE AND INSTALL EXHAUST HEADERS IN ACCORDANCE WITH DETAILS. TAPE OR PLUG ALL OPEN CONNECTIONS TO PREVENT DEBRIS CONTAMINATION.

4. INSTALL DRIP LATERALS. TAPE OR PLUG OPEN ENDS WHILE INSTALLING TO PREVENT DEBRIS CONTAMINATION.

5. AIR VACUUM RELIEF VALVES ARE NOT REQUIRED PER MANUFACTURER WHEN USING TECHLINE CV SERIES TO RETAIN WATER WITHIN TUBING.

6. THOROUGHLY FLUSH DRIPLINE LATERALS AND CONNECT TO EXHAUST HEADERS OR INTERCONNECTING LATERALS WHILE FLUSHING.

7. THOROUGHLY FLUSH EXHAUST HEADERS AND INSTALL LINE FLUSHING VALVES ACCORDING TO DETAILS.

8. THOROUGH FLUSHING OF EACH INSTALLATION SEGMENT IS NECESSARY TO ENSURE THAT NO DEBRIS CONTAMINATION OCCURS.

9. LOCATE AND INSTALL CHECK VALVE(S) AS NEEDED AND AS SHOWN IN INSTALLATION DETAILS.

10. LOCATE AND INSTALL DRIPLINE INDICATORS AS SHOWN IN DETAILS MINIMUM ONE PER EACH PLANTING ZONE.

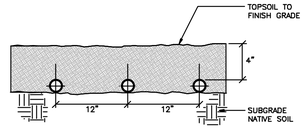

25 TYPICAL DRIPLINE SUBGRADE INSTALLATION

NTS

GATES +ASSOCIATES
LANDSCAPE ARCHITECTURE
LAND PLANNING · URBAN DESIGN
1655 N. MAIN ST. STE 365, WALNUT CREEK, CA 94596
T 925.736.8176 www.dgates.com

BORELLO RANCH BACKBONE PHASE 3

MORGAN HILL CALIFORNIA

Toll Brothers

ISSUE:	DESCRIPTION:	DATE:

REGISTERED LANDSCAPE ARCHITECT
CERTIFICATE NO. 5250
5/30/2022
Date
11/08/2021
Date
L.A.
STATE OF CALIFORNIA

PROJECT NUMBER:	5250
DRAWN:	JG, GH
CHECK:	RC
DATE:	11/08/2021
SCALE:	1"=20'

0 10' 20' 40'

IRRIGATION DETAILS

L2-12

© GATES+ASSOCIATES, INC.| 2017

WATER USE ESTIMATION

WATER TYPE	POTABLE
SITE ETO=	43

REGULAR LANDSCAPE AREAS

HYDROZONE #	HYDROZONE NAME	PLANT WATER USE TYPE	PLANT FACTOR (PF)	IRRIGATION METHOD	IRRIGATION EFFICIENCY	ETAF (PF/IE)	AREA (SQ. FT) (HA)	ETAF X AREA (HA)	ETWU (GAL/YR)	ACRE FEET/ YEAR	HCF/ YEAR	PERCENTAGE OF LANDSCAPE
F-1	Shrub	LOW	0.2	SPRAY	0.75	0.27	554	**148**	3,939	0.01	5.27	1%
F-2	Shrub	LOW	0.2	SPRAY	0.75	0.27	3,826	**1,020**	27,200	0.08	36.36	4%
F-3	Shrub	LOW	0.2	SPRAY	0.75	0.27	3,471	**926**	24,676	0.08	32.99	3%
F-4	Lawn	MOD	0.5	ROTORS	0.75	0.67	7,501	**5,001**	133,318	0.41	178.23	7%
F-5	Lawn	MOD	0.5	ROTORS	0.75	0.67	4,967	**3,311**	88,280	0.27	118.02	5%
F-6	Lawn	MOD	0.5	ROTORS	0.75	0.67	12,561	**8,374**	223,251	0.69	298.46	12%
F-7	Shrub	LOW	0.2	SPRAY	0.75	0.27	4,011	**1,070**	28,516	0.09	38.12	4%
F-8	Lawn	MOD	0.5	ROTORS	0.75	0.67	12,573	**8,382**	223,464	0.69	298.75	12%
F-9	Shrub	LOW	0.2	SPRAY	0.75	0.27	3,740	**997**	26,589	0.08	35.55	4%
F-10	Lawn	MOD	0.5	ROTORS	0.75	0.67	4,814	**3,209**	85,561	0.26	114.39	5%
F-11	Lawn	MOD	0.5	ROTORS	0.75	0.67	8,116	**5,411**	144,248	0.44	192.85	8%
F-12	Lawn	MOD	0.5	ROTORS	0.75	0.67	5,427	**3,618**	96,456	0.30	128.95	5%
F-13	Shrub	LOW	0.2	SPRAY	0.75	0.27	3,110	**829**	22,110	0.07	29.56	3%
F-14	Shrub	LOW	0.2	SPRAY	0.75	0.27	1,710	**456**	12,157	0.04	16.25	2%
F-15	Shrub	LOW	0.2	SPRAY	0.75	0.27	5,252	**1,401**	37,338	0.11	49.92	5%
F-16	Shrub	MOD	0.5	SPRAY	0.75	0.67	1,530	**1,020**	27,193	0.08	36.35	2%
F-17	Tree	MOD	0.5	BUBBLER	0.81	0.62	160	**99**	2,633	0.01	3.52	0%
F-18	Shrub	LOW	0.2	SPRAY	0.75	0.27	2,018	**538**	14,347	0.04	19.18	2%
F-19	Shrub	LOW	0.2	SPRAY	0.75	0.27	3,814	**1,017**	27,115	0.08	36.25	4%
F-20	Shrub	MOD	0.5	SPRAY	0.75	0.67	2,092	**1,395**	37,182	0.11	49.71	2%
F-21	Shrub	LOW	0.2	SPRAY	0.75	0.27	4,785	**1,276**	34,018	0.10	45.48	5%
F-22	Shrub	LOW	0.2	DRIP	0.81	0.25	746	**184**	4,911	0.02	6.57	1%
F-23	Shrub	LOW	0.2	SPRAY	0.75	0.27	2,228	**594**	15,840	0.05	21.18	2%
F-24	Shrub	LOW	0.2	SPRAY	0.75	0.27	2,160	**576**	15,356	0.05	20.53	2%
F-25	Shrub	LOW	0.2	BUBBLER	0.81	0.25	690	**170**	4,542	0.01	6.07	1%
						TOTALS	**101,856**	**51,022**	**1,360,239**	**4.17**	**1,818.50**	**100%**

SPECIAL LANDSCAPE AREAS

HYDROZONE #	HYDROZONE NAME										
				1		43,398					43%
				TOTALS		43,398					43%

MAWA	GALLONS/YR	1,858,311
	ACRE FEET/YR	5.70
	HCF/YR	2,484.37

ETWU	GALLONS/YR	1,360,239
	ACRE FEET/YR	4.17
	HCF/YR	1,818.50

SITE IRRIGATION EFFICIENCY	SITE PLANT FACT0R	MAWA COMPLIANT
62.8%	0.34	YES

ETAF Calculations	
REGULAR LANDSCAPE AREAS	
TOTAL ETAF x AREA	51,022
TOTAL AREA	101,856
AVG. ETAF	50.09%

MAWA FORMULA
MAXIMUM APPLIED WATER ALLOWANCE (MAWA) GALLONS PER YEAR
MAWA = (ETo)(0.62)[(LA x 0.45) + (0.55 x SLA)]

ETo = REFERENCE EVAPOTRANSPIRATION
0.45= ET ADJUSTMENT FACTOR
LA=LANDSCAPED AREA (SQUARE FEET)
0.62 = CONVERSION FACTOR (GALLONS/SQ.FT/YR)

ETWU FORMULA
ESTIMATED TOTAL WATER USE (ETWU) GALLONS PER YEAR
ETWU= ((ETO)(.62)(ETAF x LA))

ETo = REFERENCE EVAPOTRANSPIRATION
PF = PLANT FACTOR FOR HYDROZONES
HA = HYDROZONE AREA (SQ.FT)
0.62 = CONVERSION FACTOR (GALLONS/SQ.FT/YR)

IE = IRRIGATION EFFICIENCY (0.81)-BUBBLER/DRIP
IE = IRRIGATION EFFICIENCY (0.75)-ROTORS/SPRAY

WATER USE ESTIMATION

WATER TYPE	POTABLE
SITE ETO=	43

REGULAR LANDSCAPE AREAS

HYDROZONE #	HYDROZONE NAME	PLANT WATER USE TYPE	PLANT FACTOR (PF)	IRRIGATION METHOD	IRRIGATION EFFICIENCY	ETAF (PF/IE)	AREA (SQ. FT) (HA)	ETAF X AREA (HA)	ETWU (GAL/YR)	ACRE FEET/ YEAR	HCF/ YEAR	PERCENTAGE OF LANDSCAPE
G-1	Shrub	LOW	0.2	SPRAY	0.75	0.27	1,956	**522**	13,906	0.04	18.59	2%
G-2	Shrub	LOW	0.2	SPRAY	0.75	0.27	2,300	**613**	16,351	0.05	21.86	2%
G-3	Shrub	LOW	0.2	SPRAY	0.75	0.27	3,272	**873**	23,262	0.07	31.10	3%
G-4	Shrub	LOW	0.2	SPRAY	0.75	0.27	2,043	**545**	14,524	0.04	19.42	2%
G-5	Shrub	LOW	0.2	DRIP	0.81	0.25	2,893	**714**	19,044	0.06	25.46	3%
G-6	Tree	MOD	0.5	BUBBLER	0.81	0.62	110	**68**	1,810	0.01	2.42	0%
G-7	Shrub	LOW	0.2	SPRAY	0.75	0.27	1,240	**331**	8,816	0.03	11.79	1%
G-8	Shrub	LOW	0.2	DRIP	0.81	0.25	2,020	**499**	13,297	0.04	17.78	2%
G-9	Shrub	LOW	0.2	SPRAY	0.75	0.27	3,060	**816**	21,755	0.07	29.08	3%
G-10	Shrub	LOW	0.2	SPRAY	0.75	0.27	2,500	**667**	17,773	0.05	23.76	2%
G-11	Shrub	LOW	0.2	SPRAY	0.75	0.27	2,510	**669**	17,844	0.05	23.86	2%
G-12	Tree	MOD	0.5	BUBBLER	0.81	0.62	80	**49**	1,317	0.00	1.76	0%
G-13	Shrub	LOW	0.2	DRIP	0.81	0.25	1,210	**299**	7,965	0.02	10.65	1%
G-14	Shrub	LOW	0.2	SPRAY	0.75	0.27	2,607	**695**	18,534	0.06	24.78	2%
G-15	Shrub	LOW	0.2	SPRAY	0.75	0.27	2,540	**677**	18,058	0.06	24.14	2%
G-16	Shrub	LOW	0.2	DRIP	0.81	0.25	4,164	**1,028**	27,410	0.08	36.64	4%
G-17	Shrub	LOW	0.2	SPRAY	0.75	0.27	3,017	**805**	21,449	0.07	28.67	3%
G-18	Shrub	LOW	0.2	SPRAY	0.75	0.27	3,557	**949**	25,288	0.08	33.81	3%
G-19	Tree	MOD	0.5	BUBBLER	0.81	0.62	140	**86**	2,304	0.01	3.08	0%
G-20	Shrub	LOW	0.2	SPRAY	0.75	0.27	1,668	**445**	11,858	0.04	15.85	2%
G-21	Shrub	LOW	0.2	DRIP	0.81	0.25	2,773	**685**	18,254	0.06	24.40	3%
G-22	Shrub	LOW	0.2	DRIP	0.81	0.25	892	**220**	5,872	0.02	7.85	1%
G-23	Shrub	LOW	0.2	SPRAY	0.75	0.27	1,865	**497**	13,259	0.04	17.73	2%
G-24	Shrub	LOW	0.2	SPRAY	0.75	0.27	3,954	**1,054**	28,110	0.09	37.58	4%
G-25	Shrub	LOW	0.2	SPRAY	0.75	0.27	2,642	**705**	18,783	0.06	25.11	2%
G-26	Shrub	LOW	0.2	SPRAY	0.75	0.27	1,825	**487**	12,975	0.04	17.35	2%
G-27	Shrub	LOW	0.2	SPRAY	0.75	0.27	1,960	**523**	13,934	0.04	18.63	2%
G-28	Shrub	LOW	0.2	BUBBLER	0.81	0.25	225	**56**	1,481	0.00	1.98	0%
G-29	Tree	MOD	0.5	BUBBLER	0.81	0.62	60	**37**	987	0.00	1.32	0%
G-30	Shrub	LOW	0.2	DRIP	0.81	0.25	2,072	**512**	13,639	0.04	18.23	2%
G-31	Shrub	LOW	0.2	SPRAY	0.75	0.27	2,192	**585**	15,584	0.05	20.83	2%
G-32	Shrub	LOW	0.2	BUBBLER	0.81	0.25	380	**94**	2,501	0.01	3.34	0%
G-33	Shrub	LOW	0.2	SPRAY	0.75	0.27	1,821	**486**	12,946	0.04	17.31	2%
G-34	Shrub	LOW	0.2	DRIP	0.81	0.25	970	**240**	6,385	0.02	8.54	1%
G-35	Shrub	LOW	0.2	SPRAY	0.75	0.27	1,385	**369**	9,846	0.03	13.16	1%
G-36	Shrub	LOW	0.2	SPRAY	0.75	0.27	2,375	**633**	16,885	0.05	22.57	2%
G-37	Shrub	LOW	0.2	SPRAY	0.75	0.27	3,061	**816**	21,762	0.07	29.09	3%
G-38	Tree	MOD	0.5	BUBBLER	0.81	0.62	80	**49**	1,317	0.00	1.76	0%
G-39	Shrub	LOW	0.2	BUBBLER	0.81	0.25	756	**187**	4,977	0.02	6.65	1%
G-40	Shrub	LOW	0.2	SPRAY	0.75	0.27	1,980	**528**	14,076	0.04	18.82	2%
G-41	Shrub	LOW	0.2	SPRAY	0.75	0.27	1,120	**299**	7,962	0.02	10.64	1%
G-42	Shrub	LOW	0.2	BUBBLER	0.81	0.25	435	**107**	2,863	0.01	3.83	0%
G-43	Shrub	LOW	0.2	SPRAY	0.75	0.27	1,775	**473**	12,619	0.04	16.87	2%
G-44	Shrub	LOW	0.2	SPRAY	0.75	0.27	1,260	**336**	8,958	0.03	11.98	1%
G-45	Shrub	LOW	0.2	SPRAY	0.75	0.27	2,236	**596**	15,896	0.05	21.25	2%
G-46	Shrub	LOW	0.2	SPRAY	0.75	0.27	2,943	**785**	20,923	0.06	27.97	3%
G-47	Shrub	LOW	0.2	SPRAY	0.75	0.27	3,030	**808**	21,541	0.07	28.80	3%
G-48	Tree	MOD	0.5	BUBBLER	0.81	0.62	200	**123**	3,291	0.01	4.40	0%
G-49	Shrub	LOW	0.2	SPRAY	0.75	0.27	2,530	**675**	17,987	0.06	24.05	2%
G-50	Shrub	LOW	0.2	SPRAY	0.75	0.27	2,814	**750**	20,006	0.06	26.75	3%
G-51	Shrub	LOW	0.2	DRIP	0.81	0.25	1,754	**433**	11,546	0.04	15.44	2%
G-52	Shrub	LOW	0.2	DRIP	0.81	0.25	2,067	**510**	13,606	0.04	18.19	2%
G-53	Shrub	LOW	0.2	SPRAY	0.75	0.27	1,756	**468**	12,484	0.04	16.69	2%
G-54	Shrub	LOW	0.2	SPRAY	0.75	0.27	2,540	**677**	18,058	0.06	24.14	2%
G-55	Shrub	LOW	0.2	BUBBLER	0.81	0.25	660	**163**	4,345	0.01	5.81	1%
G-56	Shrub	LOW	0.2	SPRAY	0.75	0.27	2,147	**573**	15,264	0.05	20.41	2%
G-57	Shrub	LOW	0.2	SPRAY	0.75	0.27	2,530	**675**	17,987	0.06	24.05	2%
G-58	Shrub	LOW	0.2	BUBBLER	0.81	0.25	780	**193**	5,135	0.02	6.86	1%
						TOTALS	**108,732**	**28,755**	**766,609**	**2.35**	**1,024.88**	**100%**

SPECIAL LANDSCAPE AREAS

HYDROZONE #	HYDROZONE NAME										
				1		0					0%
				TOTALS		0					0%

MAWA	GALLONS/YR	1,304,458
	ACRE FEET/YR	4.00
	HCF/YR	1,743.93

ETWU	GALLONS/YR	766,609
	ACRE FEET/YR	2.35
	HCF/YR	1,024.88

SITE IRRIGATION EFFICIENCY	SITE PLANT FACT0R	MAWA COMPLIANT
59.1%	0.16	YES

ETAF Calculations	
REGULAR LANDSCAPE AREAS	
TOTAL ETAF x AREA	28,755
TOTAL AREA	108,732
AVG. ETAF	26.45%

MAWA FORMULA
MAXIMUM APPLIED WATER ALLOWANCE (MAWA) GALLONS PER YEAR
MAWA = (ETo)(0.62)[(LA x 0.45) + (0.55 x SLA)]

ETo = REFERENCE EVAPOTRANSPIRATION
0.45= ET ADJUSTMENT FACTOR
LA=LANDSCAPED AREA (SQUARE FEET)
0.62 = CONVERSION FACTOR (GALLONS/SQ.FT/YR)

ETWU FORMULA
ESTIMATED TOTAL WATER USE (ETWU) GALLONS PER YEAR
ETWU= ((ETO)(.62)(ETAF x LA))

ETo = REFERENCE EVAPOTRANSPIRATION
PF = PLANT FACTOR FOR HYDROZONES
HA = HYDROZONE AREA (SQ.FT)
0.62 = CONVERSION FACTOR (GALLONS/SQ.FT/YR)

IE = IRRIGATION EFFICIENCY (0.81)-BUBBLER/DRIP
IE = IRRIGATION EFFICIENCY (0.75)-ROTORS/SPRAY

GATES +ASSOCIATES
LANDSCAPE ARCHITECTURE
LAND PLANNING · URBAN DESIGN
1655 N. MAIN ST. STE 365, WALNUT CREEK, CA 94596
T 925.736.8176 www.dgates.com

BORELLO RANCH BACKBONE PHASE 3
MORGAN HILL CALIFORNIA

Toll Brothers

ISSUE:	DESCRIPTION:	DATE:

REGISTERED LANDSCAPE ARCHITECT
CHRIS CASE · No. 4368
6/30/2022
Renewal Date
11/08/2021
Date
L.A.
STATE OF CALIFORNIA

PROJECT NUMBER:	5250
DRAWN:	JG, GH
CHECK:	RC
DATE:	11/08/2021
SCALE:	NTS

0 10' 20' 40'

WATER USE CALCULATIONS

L2-13

© GATES+ASSOCIATES, INC.| 2017

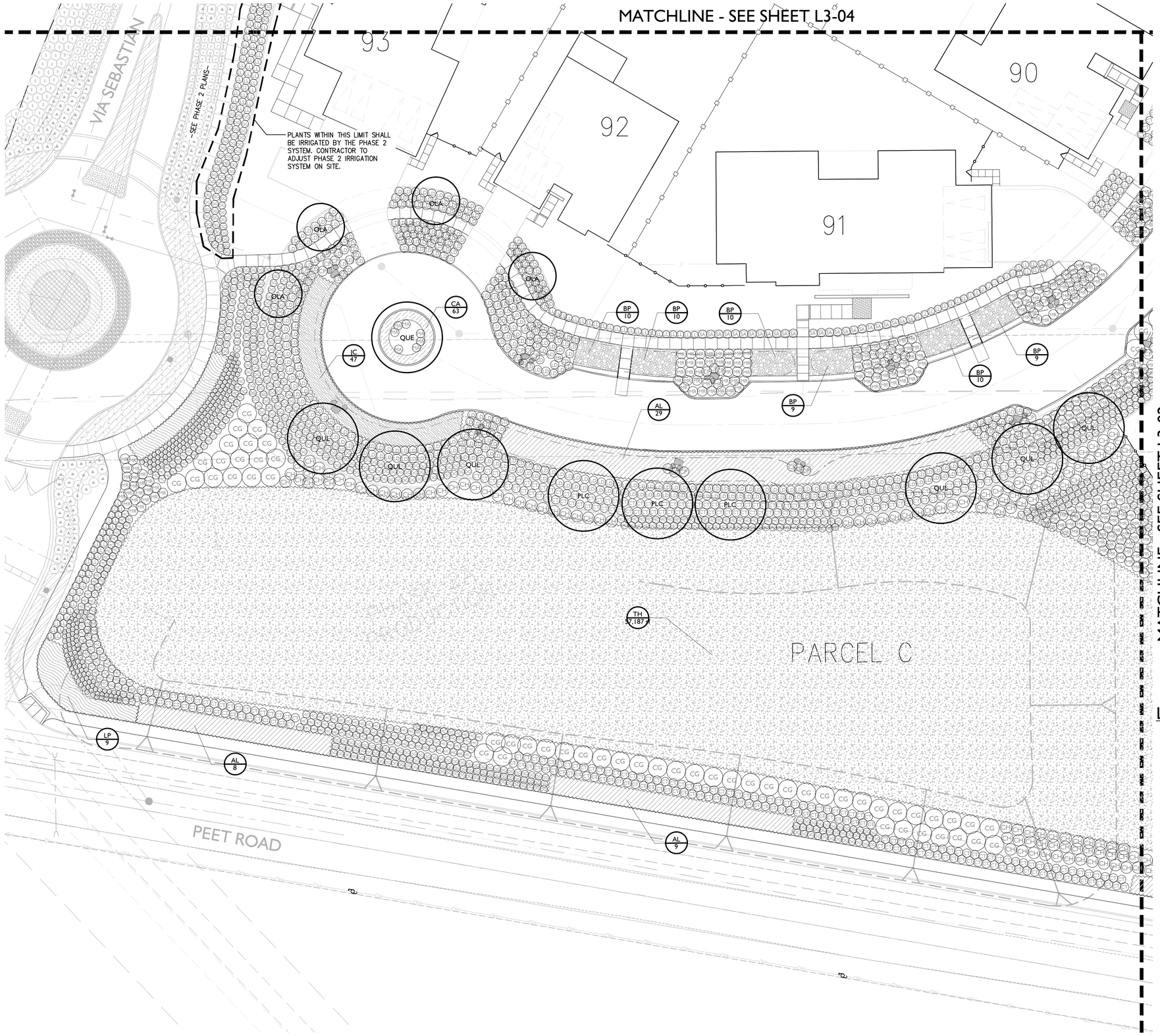

SEE SHEET L0-02 FOR COMPLETE PLANTING SCHEDULE

LANDSCAPE KEY MAP

GATES +ASSOCIATES
LANDSCAPE ARCHITECTURE
LAND PLANNING · URBAN DESIGN
1655 N. MAIN ST. STE 365, WALNUT CREEK, CA 94596
T 925.736.8176 www.dgates.com

BORELLO RANCH BACKBONE PHASE 3

MORGAN HILL
CALIFORNIA

Toll Brothers

ISSUE:	DESCRIPTION:	DATE:

REGISTERED LANDSCAPE ARCHITECT
CHRIS CASE · No. 5250
6/30/2022
Renewal Date
11/08/2021
Date
L.A.
STATE OF CALIFORNIA

PROJECT NUMBER:	5250
DRAWN:	JG, GH
CHECK:	RC
DATE:	11/08/2021
SCALE:	1"=20'

0 10' 20' 40'

PLANTING PLAN

L3-01

© GATES+ASSOCIATES, INC.| 2017

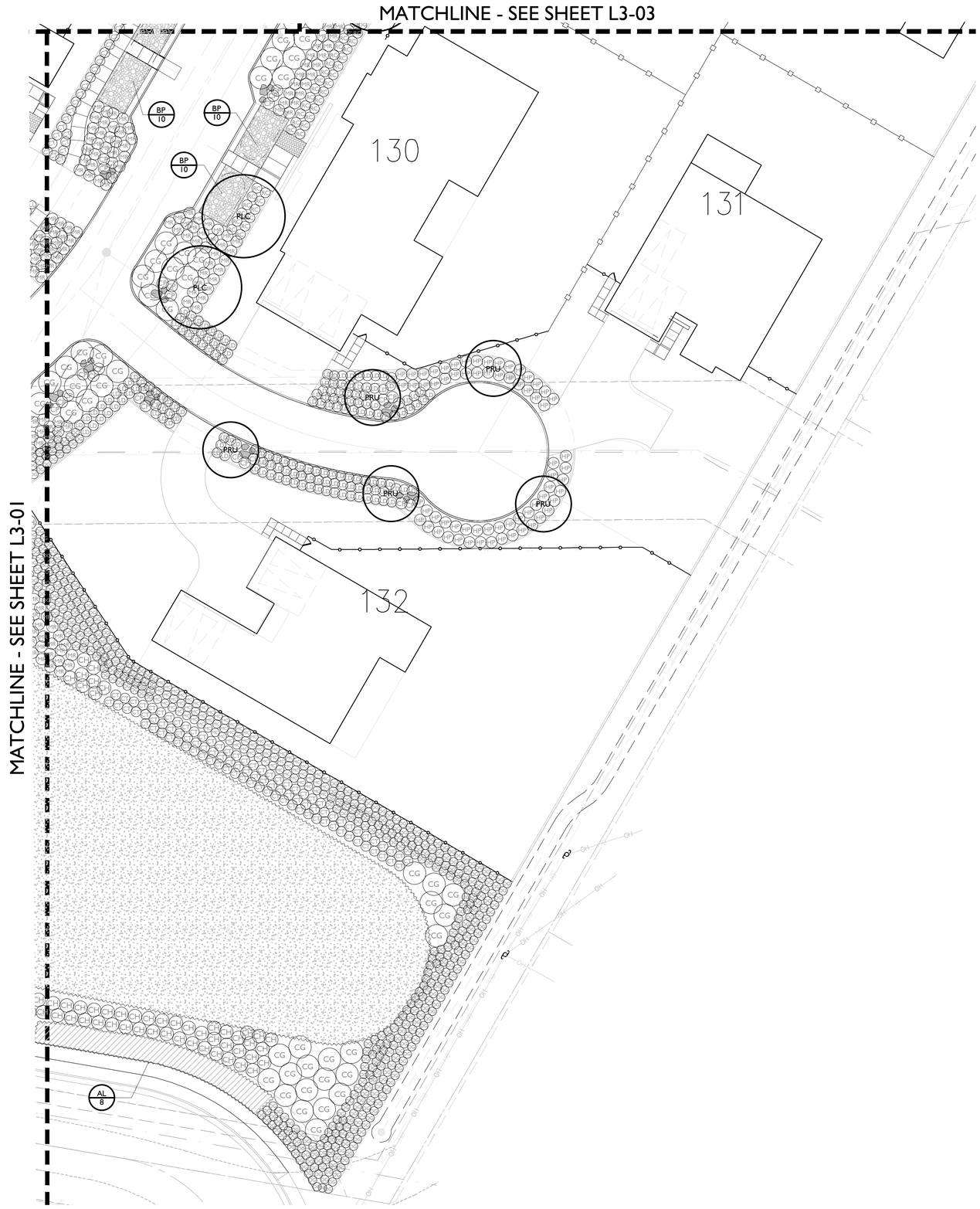

PLANT SCHEDULE

TREES	BOTANICAL NAME	COMMON NAME
ACE	ACER X FREEMANII `JEFFSRED`	AUTUMN BLAZE MAPLE
LAM	LAGERSTROEMIA X `MUSKOGEE`	LAVENDER CRAPE MYRTLE
OLA	OLEA EUROPAEA `FRUITLESS`	FRUITLESS OLIVE
PLC	PLATANUS X ACERIFOLIA `COLUMBIA`	COLUMBIA LONDON PLANE TREE
PRU	PRUNUS SERRULATA	JAPANESE FLOWERING CHERRY
QUE	QUERCUS AGRIFOLIA	COAST LIVE OAK MULTI-TRUNK
QUL	QUERCUS LOBATA	VALLEY OAK

SHRUBS	BOTANICAL NAME	COMMON NAME
CK	CALAMAGROSTIS X ACUTIFLORA `KARL FOERSTER`	FEATHER REED GRASS
CG	CEANOTHUS GRISEUS HORIZONTALIS `YANKEE POINT`	CALIFORNIA LILAC
CH	CHONDROPETALUM ELEPHANTINUM	LARGE CAPE RUSH
CT	CHONDROPETALUM TECTORUM	CAPE RUSH
CP	CORTADERIA SELLOANA `PUMILA`	DWARF PAMPAS GRASS
DG	DIETES GRANDIFLORA	FORTNIGHT LILY
EH	EPILOBIUM CANUM	CALIFORNIA FUCHSIA
HP	HESPERALOE PARVIFLORA	RED YUCCA
JP	JUNCUS PATENS	CALIFORNIA GRAY RUSH
LD	LEYMUS CONDENSATUS `CANYON PRINCE`	CANYON PRINCE GIANT WILD RYE
LL	LOMANDRA LONGIFOLIA `BREEZE`	DWARF MAT RUSH
MA	MIMULUS AURANTIACUS	STICKY MONKEYFLOWER
MC	MUHLENBERGIA CAPILLARIS `REGAL MIST`	REGAL MIST PINK MUHLY GRASS
MR	MUHLENBERGIA RIGENS	DEER GRASS
RC	RHAPHIOLEPIS INDICA `CLARA`	CLARA INDIAN HAWTHORN
RH	ROSMARINUS OFFICINALIS `HUNTINGTON CARPET`	HUNTINGTON CARPET ROSEMARY
SA	SANTOLINA CHAMAECYPARISSUS	LAVENDER COTTON

GROUND COVERS	BOTANICAL NAME	COMMON NAME
AL	ACACIA REDOLENS `LOW BOY`	LOW BOY BANK CATCLAW
BP	BACCHARIS PILULARIS 'TWIN PEAKS#2'	TWIN PEAKS #2 COYOTE BRUSH
BA	BOUTELOUA GRACILIS `BLONDE AMBITION`	BLUE GRAMA
BT	BULBINE FRUTESCENS `TINY TANGERINE`	TINY TANGERINE BULBINE
CA	CAREX DIVULSA	BERKELEY SEDGE
JC	JUNIPERUS CONFERTA `BLUE PACIFIC`	BLUE PACIFIC JUNIPER
LP	LANTANA MONTEVIDENSIS	TRAILING LANTANA
LA	LANTANA MONTEVIDENSIS `ALBA`	WHITE TRAILING LANTANA
TH	TURF HYDROSEED	BIOFILTRATION SOD ™

SEE SHEET L0-02 FOR COMPLETE PLANTING SCHEDULE

LANDSCAPE KEY MAP

GATES +ASSOCIATES
LANDSCAPE ARCHITECTURE
LAND PLANNING · URBAN DESIGN
1655 N. MAIN ST. STE 365, WALNUT CREEK, CA 94596
T 925.736.8176 www.dgates.com

BORELLO RANCH BACKBONE PHASE 3

MORGAN HILL
CALIFORNIA

Toll Brothers

ISSUE:	DESCRIPTION:	DATE:

REGISTERED LANDSCAPE ARCHITECT
CASEY CASE · No. 5252
6/30/2022
Renewal Date
11/08/2021
Date
L.A.
STATE OF CALIFORNIA

PROJECT NUMBER:	5250
DRAWN:	JG, GH
CHECK:	RC
DATE:	11/08/2021
SCALE:	1"=20'

0 10' 20' 40'

PLANTING PLAN

L3-02

© GATES+ASSOCIATES, INC.| 2017

MATCHLINE - SEE SHEET L3-05

MATCHLINE - SEE SHEET L3-06

MATCHLINE - SEE SHEET L3-04

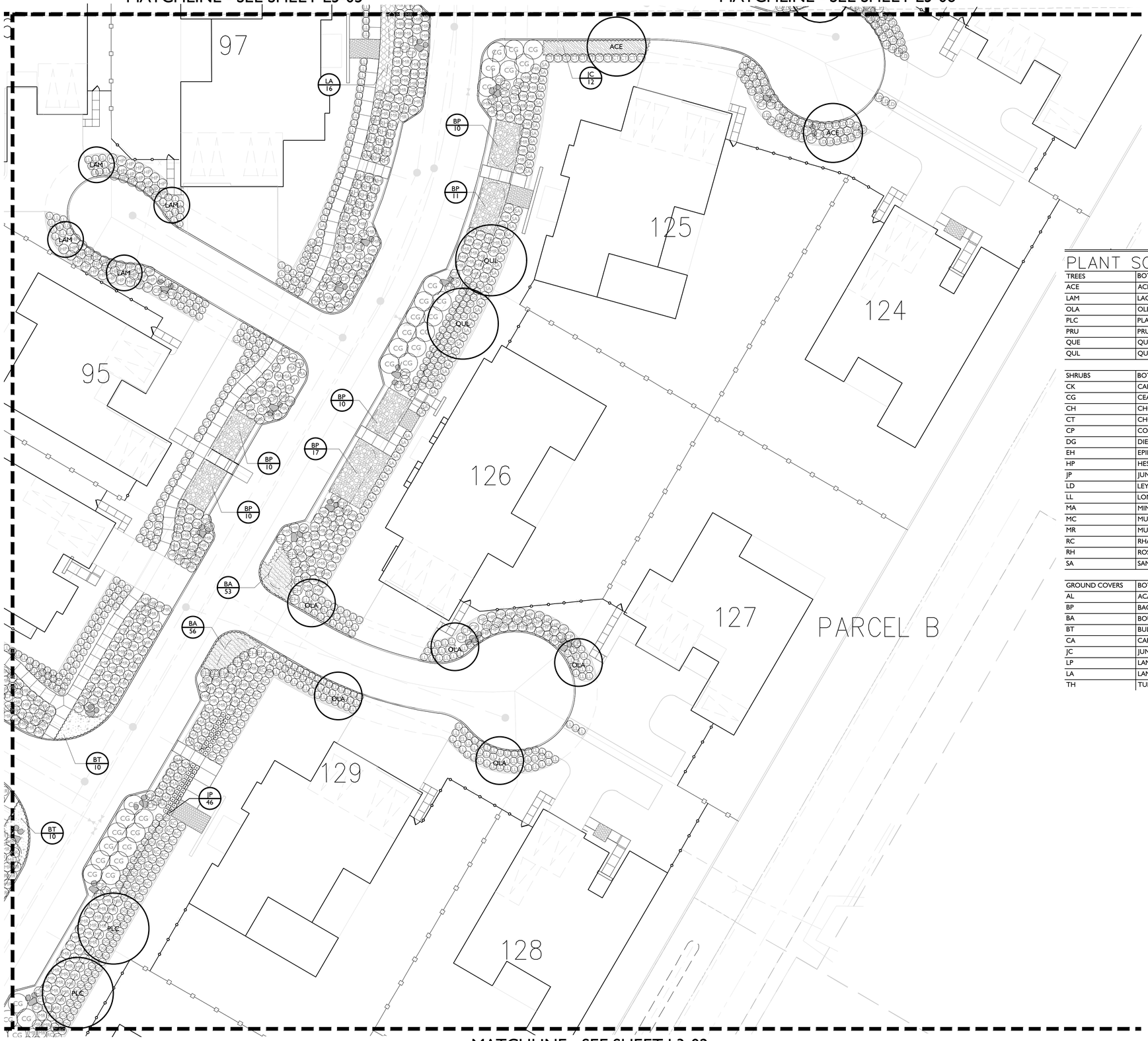

MATCHLINE - SEE SHEET L3-02

SEE SHEET L0-02 FOR COMPLETE PLANTING SCHEDULE

PLANT SCHEDULE

TREES	BOTANICAL NAME	COMMON NAME
ACE	ACER X FREEMANII `JEFFSRED`	AUTUMN BLAZE MAPLE
LAM	LAGERSTROEMIA X `MUSKOGEE`	LAVENDER CRAPE MYRTLE
OLA	OLEA EUROPAEA `FRUITLESS`	FRUITLESS OLIVE
PLC	PLATANUS X ACERIFOLIA `COLUMBIA`	COLUMBIA LONDON PLANE TREE
PRU	PRUNUS SERRULATA	JAPANESE FLOWERING CHERRY
QUE	QUERCUS AGRIFOLIA	COAST LIVE OAK MULTI-TRUNK
QUL	QUERCUS LOBATA	VALLEY OAK

SHRUBS	BOTANICAL NAME	COMMON NAME
CK	CALAMAGROSTIS X ACUTIFLORA `KARL FOERSTER`	FEATHER REED GRASS
CG	CEANOTHUS GRISEUS HORIZONTALIS `YANKEE POINT`	CALIFORNIA LILAC
CH	CHONDROPETALUM ELEPHANTINUM	LARGE CAPE RUSH
CT	CHONDROPETALUM TECTORUM	CAPE RUSH
CP	CORTADERIA SELLOANA `PUMILA`	DWARF PAMPAS GRASS
DG	DIETES GRANDIFLORA	FORTNIGHT LILY
EH	EPILOBIUM CANUM	CALIFORNIA FUCHSIA
HP	HESPERALOE PARVIFLORA	RED YUCCA
JP	JUNCUS PATENS	CALIFORNIA GRAY RUSH
LD	LEYMUS CONDENSATUS `CANYON PRINCE`	CANYON PRINCE GIANT WILD RYE
LL	LOMANDRA LONGIFOLIA `BREEZE`	DWARF MAT RUSH
MA	MIMULUS AURANTIACUS	STICKY MONKEYFLOWER
MC	MUHLENBERGIA CAPILLARIS `REGAL MIST`	REGAL MIST PINK MUHLY GRASS
MR	MUHLENBERGIA RIGENS	DEER GRASS
RC	RHAPHIOLEPIS INDICA `CLARA`	CLARA INDIAN HAWTHORN
RH	ROSMARINUS OFFICINALIS `HUNTINGTON CARPET`	HUNTINGTON CARPET ROSEMARY
SA	SANTOLINA CHAMAECYPARISSUS	LAVENDER COTTON

GROUND COVERS	BOTANICAL NAME	COMMON NAME
AL	ACACIA REDOLENS `LOW BOY`	LOW BOY BANK CATCLAW
BP	BACCHARIS PILULARIS 'TWIN PEAKS#2'	TWIN PEAKS #2 COYOTE BRUSH
BA	BOUTELOUA GRACILIS `BLONDE AMBITION`	BLUE GRAMA
BT	BULBINE FRUTESCENS `TINY TANGERINE`	TINY TANGERINE BULBINE
CA	CAREX DIVULSA	BERKELEY SEDGE
JC	JUNIPERUS CONFERTA `BLUE PACIFIC`	BLUE PACIFIC JUNIPER
LP	LANTANA MONTEVIDENSIS	TRAILING LANTANA
LA	LANTANA MONTEVIDENSIS `ALBA`	WHITE TRAILING LANTANA
TH	TURF HYDROSEED	BIOFILTRATION SOD ™

LANDSCAPE KEY MAP

GATES +ASSOCIATES
LANDSCAPE ARCHITECTURE
LAND PLANNING · URBAN DESIGN
1655 N. MAIN ST. STE 365, WALNUT CREEK, CA 94596
T 925.736.8176 www.dgates.com

BORELLO RANCH BACKBONE PHASE 3

MORGAN HILL
CALIFORNIA

Toll Brothers

ISSUE:	DESCRIPTION:	DATE:

REGISTERED LANDSCAPE ARCHITECT
CARL GABE · No. 5511
6/30/2022
11/08/2021
L.A.
STATE OF CALIFORNIA

PROJECT NUMBER:	5250
DRAWN:	JG, GH
CHECK:	RC
DATE:	11/08/2021
SCALE:	1"=20'

0 10' 20' 40'

PLANTING PLAN

L3-03

© GATES+ASSOCIATES, INC.| 2017

MATCHLINE - SEE SHEET L3-06

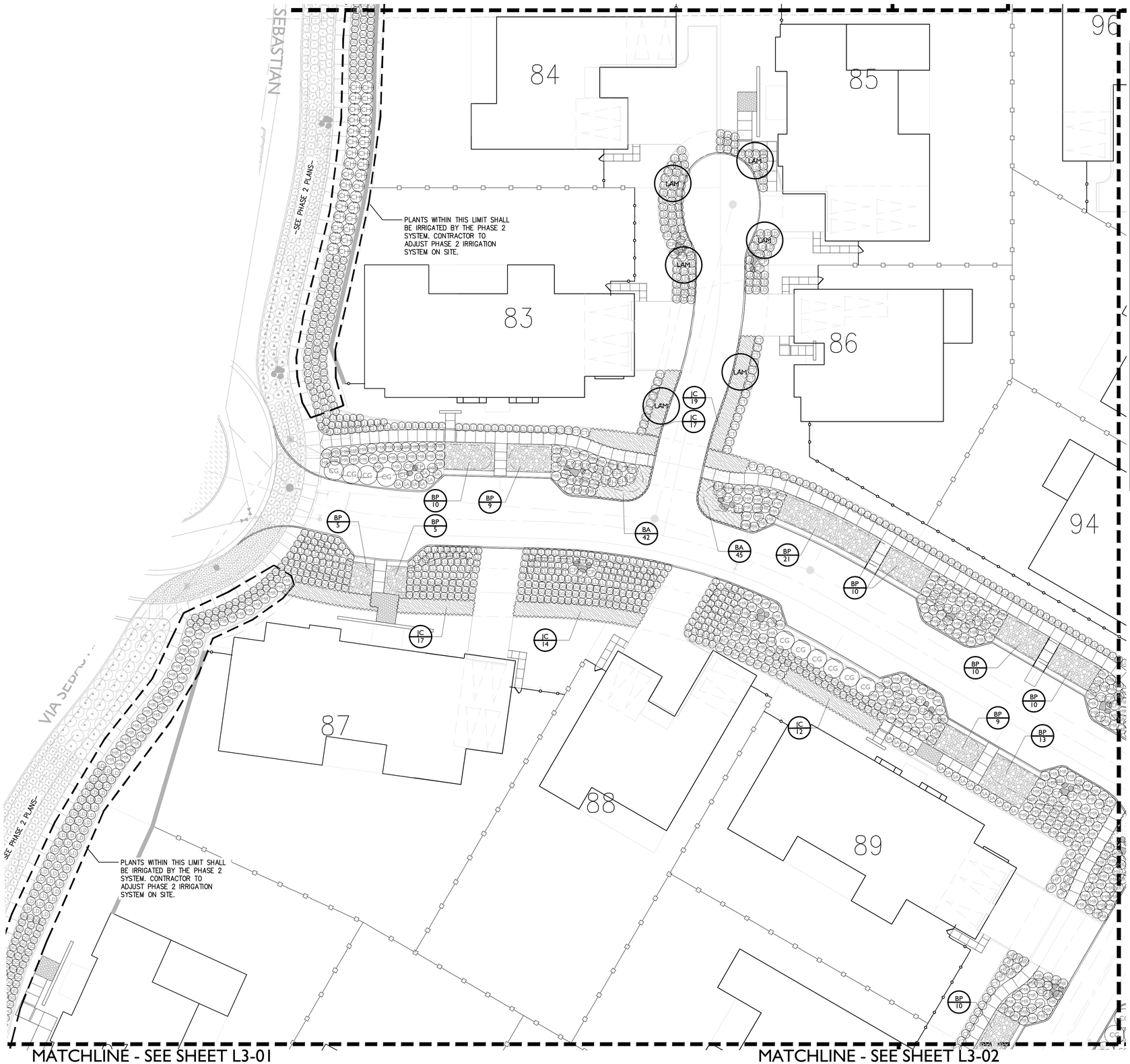

MATCHLINE - SEE SHEET L3-01

MATCHLINE - SEE SHEET L3-02

MATCHLINE - SEE SHEET L3-03

PLANT SCHEDULE

TREES	BOTANICAL NAME	COMMON NAME
ACE	ACER X FREEMANII `JEFFSRED`	AUTUMN BLAZE MAPLE
LAM	LAGERSTROEMIA X `MUSKOGEE`	LAVENDER CRAPE MYRTLE
OLA	OLEA EUROPAEA `FRUITLESS`	FRUITLESS OLIVE
PLC	PLATANUS X ACERIFOLIA `COLUMBIA`	COLUMBIA LONDON PLANE TREE
PRU	PRUNUS SERRULATA	JAPANESE FLOWERING CHERRY
QUE	QUERCUS AGRIFOLIA	COAST LIVE OAK MULTI-TRUNK
QUL	QUERCUS LOBATA	VALLEY OAK
SHRUBS	BOTANICAL NAME	COMMON NAME
CK	CALAMAGROSTIS X ACUTIFLORA `KARL FOERSTER`	FEATHER REED GRASS
CG	CEANOTHUS GRISEUS HORIZONTALIS `YANKEE POINT`	CALIFORNIA LILAC
CH	CHONDROPETALUM ELEPHANTINUM	LARGE CAPE RUSH
CT	CHONDROPETALUM TECTORUM	CAPE RUSH
CP	CORTADERIA SELLOANA `PUMILA`	DWARF PAMPAS GRASS
DG	DIETES GRANDIFLORA	FORTNIGHT LILY
EH	EPILOBIUM CANUM	CALIFORNIA FUCHSIA
HP	HESPERALOE PARVIFLORA	RED YUCCA
JP	JUNCUS PATENS	CALIFORNIA GRAY RUSH
LD	LEYMUS CONDENSATUS `CANYON PRINCE`	CANYON PRINCE GIANT WILD RYE
LL	LOMANDRA LONGIFOLIA `BREEZE`	DWARF MAT RUSH
MA	MIMULUS AURANTIACUS	STICKY MONKEYFLOWER
MC	MUHLENBERGIA CAPILLARIS `REGAL MIST`	REGAL MIST PINK MUHLY GRASS
MR	MUHLENBERGIA RIGENS	DEER GRASS
RC	RHAPHIOLEPIS INDICA `CLARA`	CLARA INDIAN HAWTHORN
RH	ROSMARINUS OFFICINALIS `HUNTINGTON CARPET`	HUNTINGTON CARPET ROSEMARY
SA	SANTOLINA CHAMAECYPARISSUS	LAVENDER COTTON
GROUND COVERS	BOTANICAL NAME	COMMON NAME
AL	ACACIA REDOLENS `LOW BOY`	LOW BOY BANK CATCLAW
BP	BACCHARIS PILULARIS `TWIN PEAKS#2`	TWIN PEAKS #2 COYOTE BRUSH
BA	BOUTELOUA GRACILIS `BLONDE AMBITION`	BLUE GRAMA
BT	BULBINE FRUTESCENS `TINY TANGERINE`	TINY TANGERINE BULBINE
CA	CAREX DIVULSA	BERKELEY SEDGE
JC	JUNIPERUS CONFERTA `BLUE PACIFIC`	BLUE PACIFIC JUNIPER
LP	LANTANA MONTEVIDENSIS	TRAILING LANTANA
LA	LANTANA MONTEVIDENSIS `ALBA`	WHITE TRAILING LANTANA
TH	TURF HYDROSEED	BIOFILTRATION SOD ™

SEE SHEET L0-02 FOR COMPLETE PLANTING SCHEDULE

LANDSCAPE KEY MAP

GATES +ASSOCIATES
LANDSCAPE ARCHITECTURE
LAND PLANNING · URBAN DESIGN
1655 N. MAIN ST. STE 365, WALNUT CREEK, CA 94596
T 925.736.8176 www.dgates.com

BORELLO RANCH BACKBONE PHASE 3

MORGAN HILL
CALIFORNIA

Toll Brothers

ISSUE:	DESCRIPTION:	DATE:

REGISTERED LANDSCAPE ARCHITECT · GARY CASE · No. 5250 · 6/30/2022 · 11/08/2021 · STATE OF CALIFORNIA

PROJECT NUMBER:	5250
DRAWN:	JG, GH
CHECK:	RC
DATE:	11/08/2021
SCALE:	1"=20'

0 10' 20' 40'

PLANTING PLAN

L3-04

© GATES+ASSOCIATES, INC.| 2017

MATCHLINE - SEE SHEET L3-07

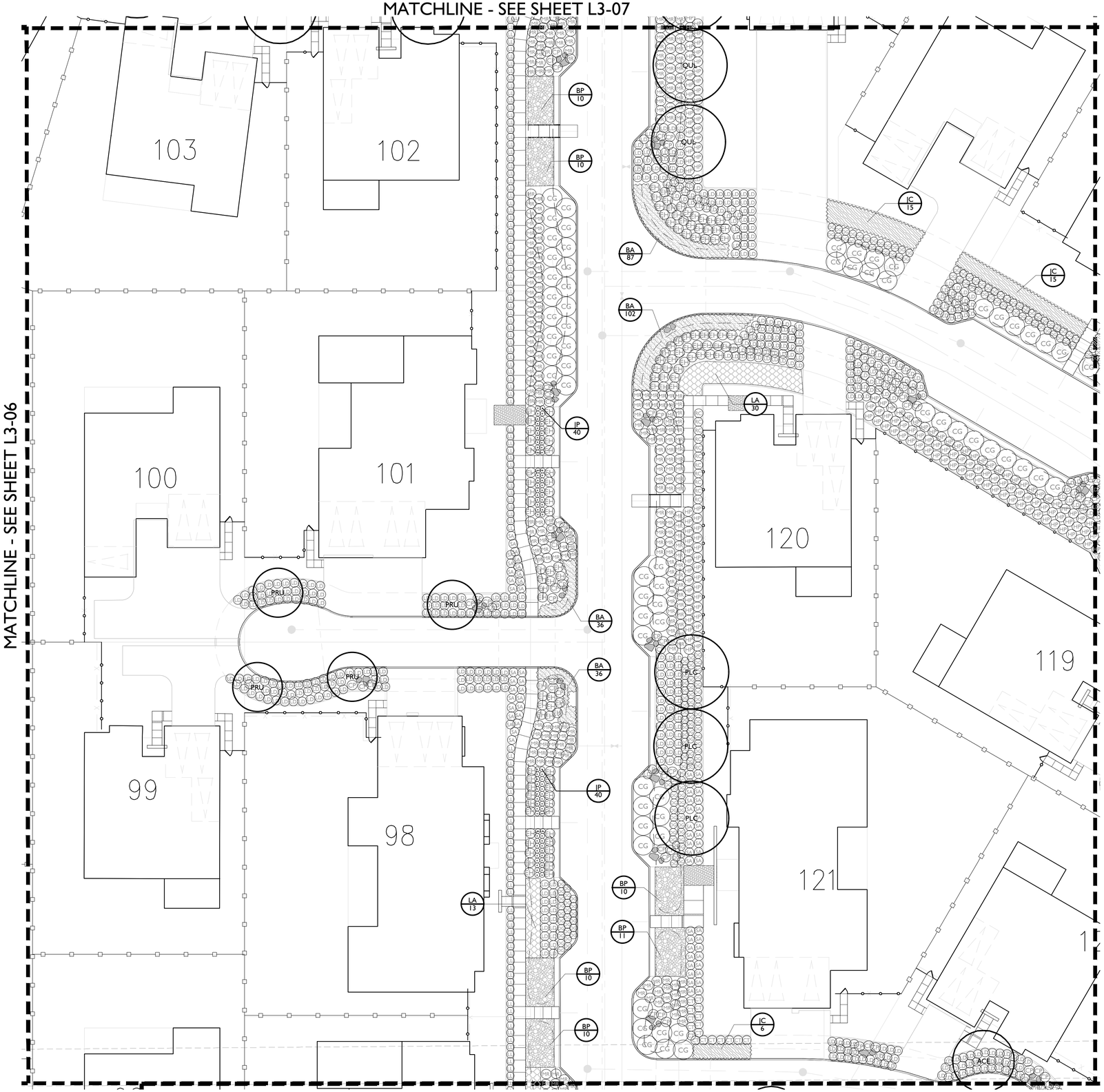

MATCHLINE - SEE SHEET L3-06

MATCHLINE - SEE SHEET L3-06

MATCHLINE - SEE SHEET L3-03

PLANT SCHEDULE

TREES	BOTANICAL NAME	COMMON NAME
ACE	ACER X FREEMANII `JEFFSRED`	AUTUMN BLAZE MAPLE
LAM	LAGERSTROEMIA X `MUSKOGEE`	LAVENDER CRAPE MYRTLE
OLA	OLEA EUROPAEA `FRUITLESS`	FRUITLESS OLIVE
PLC	PLATANUS X ACERIFOLIA `COLUMBIA`	COLUMBIA LONDON PLANE TREE
PRU	PRUNUS SERRULATA	JAPANESE FLOWERING CHERRY
QUE	QUERCUS AGRIFOLIA	COAST LIVE OAK MULTI-TRUNK
QUL	QUERCUS LOBATA	VALLEY OAK

SHRUBS	BOTANICAL NAME	COMMON NAME
CK	CALAMAGROSTIS X ACUTIFLORA `KARL FOERSTER`	FEATHER REED GRASS
CG	CEANOTHUS GRISEUS HORIZONTALIS `YANKEE POINT`	CALIFORNIA LILAC
CH	CHONDROPETALUM ELEPHANTINUM	LARGE CAPE RUSH
CT	CHONDROPETALUM TECTORUM	CAPE RUSH
CP	CORTADERIA SELLOANA `PUMILA`	DWARF PAMPAS GRASS
DG	DIETES GRANDIFLORA	FORTNIGHT LILY
EH	EPILOBIUM CANUM	CALIFORNIA FUCHSIA
HP	HESPERALOE PARVIFLORA	RED YUCCA
JP	JUNCUS PATENS	CALIFORNIA GRAY RUSH
LD	LEYMUS CONDENSATUS `CANYON PRINCE`	CANYON PRINCE GIANT WILD RYE
LL	LOMANDRA LONGIFOLIA `BREEZE`	DWARF MAT RUSH
MA	MIMULUS AURANTIACUS	STICKY MONKEYFLOWER
MC	MUHLENBERGIA CAPILLARIS `REGAL MIST`	REGAL MIST PINK MUHLY GRASS
MR	MUHLENBERGIA RIGENS	DEER GRASS
RC	RHAPHIOLEPIS INDICA `CLARA`	CLARA INDIAN HAWTHORN
RH	ROSMARINUS OFFICINALIS `HUNTINGTON CARPET`	HUNTINGTON CARPET ROSEMARY
SA	SANTOLINA CHAMAECYPARISSUS	LAVENDER COTTON

GROUND COVERS	BOTANICAL NAME	COMMON NAME
AL	ACACIA REDOLENS `LOW BOY`	LOW BOY BANK CATCLAW
BP	BACCHARIS PILULARIS 'TWIN PEAKS#2'	TWIN PEAKS #2 COYOTE BRUSH
BA	BOUTELOUA GRACILIS `BLONDE AMBITION`	BLUE GRAMA
BT	BULBINE FRUTESCENS `TINY TANGERINE`	TINY TANGERINE BULBINE
CA	CAREX DIVULSA	BERKELEY SEDGE
JC	JUNIPERUS CONFERTA `BLUE PACIFIC`	BLUE PACIFIC JUNIPER
LP	LANTANA MONTEVIDENSIS	TRAILING LANTANA
LA	LANTANA MONTEVIDENSIS `ALBA`	WHITE TRAILING LANTANA
TH	TURF HYDROSEED	BIOFILTRATION SOD ™

SEE SHEET L0-02 FOR COMPLETE PLANTING SCHEDULE

LANDSCAPE KEY MAP

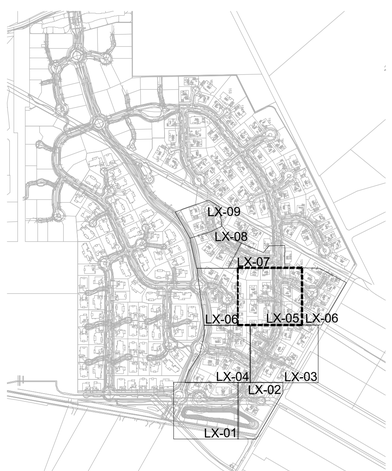

GATES
+ASSOCIATES
LANDSCAPE ARCHITECTURE
LAND PLANNING · URBAN DESIGN
1655 N. MAIN ST. STE 365, WALNUT CREEK, CA 94596
T 925.736.8176 www.dgates.com

BORELLO RANCH BACKBONE PHASE 3

MORGAN HILL
CALIFORNIA

Toll Brothers

ISSUE:	DESCRIPTION:	DATE:

REGISTERED LANDSCAPE ARCHITECT
GREG GATES · No. 3557
6/30/2022
Renewal Date
11/08/2021
Date
L.A.
STATE OF CALIFORNIA

PROJECT NUMBER:	5250
DRAWN:	JG, GH
CHECK:	RC
DATE:	11/08/2021
SCALE:	1"=20'

0 10' 20' 40'

PLANTING PLAN

L3-05

© GATES+ASSOCIATES, INC.| 2017

MATCHLINE - SEE SHEET L3-08

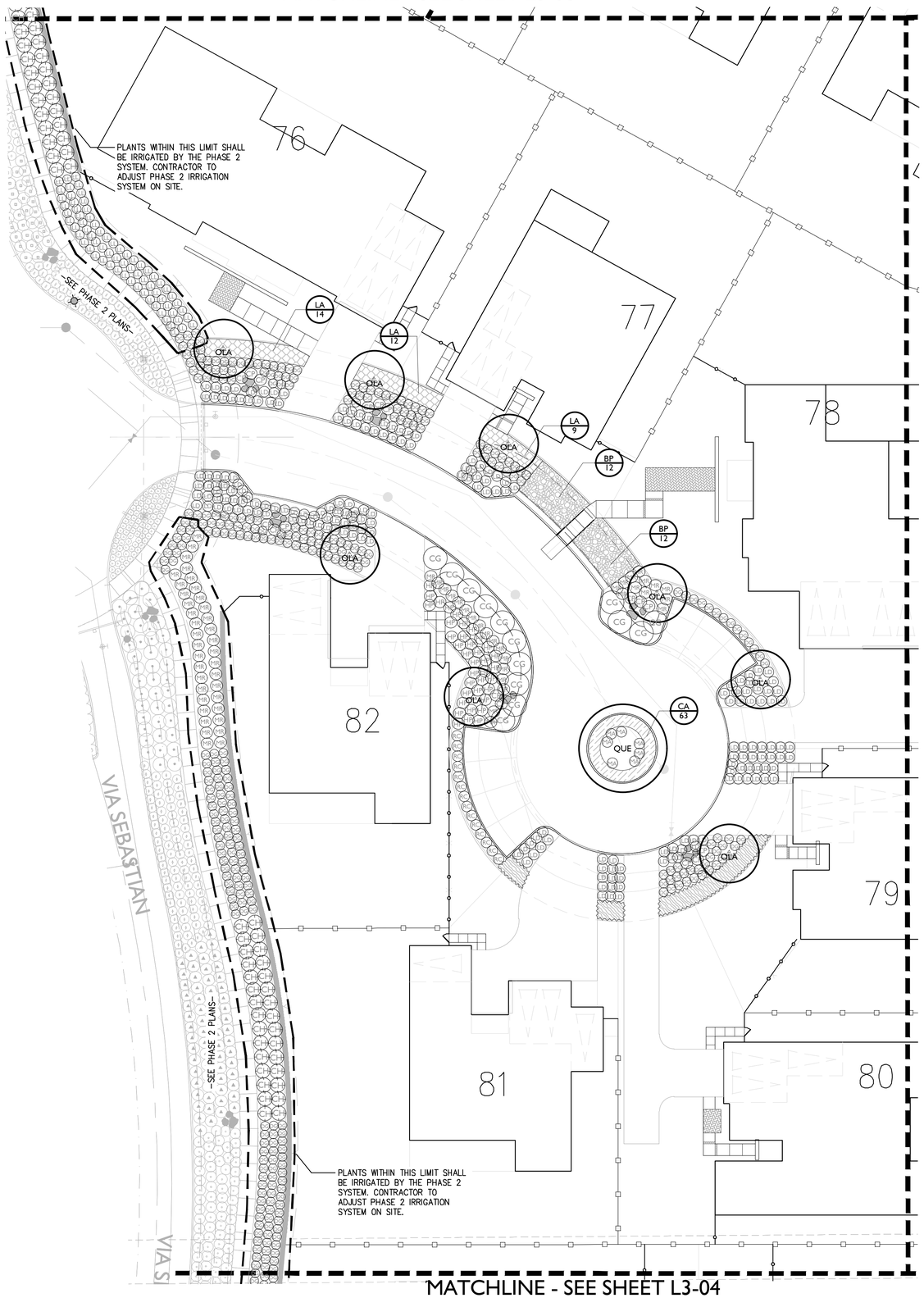

MATCHLINE - SEE SHEET L3-04

MATCHLINE - SEE SHEET L3-05

MATCHLINE - SEE SHEET L3-05

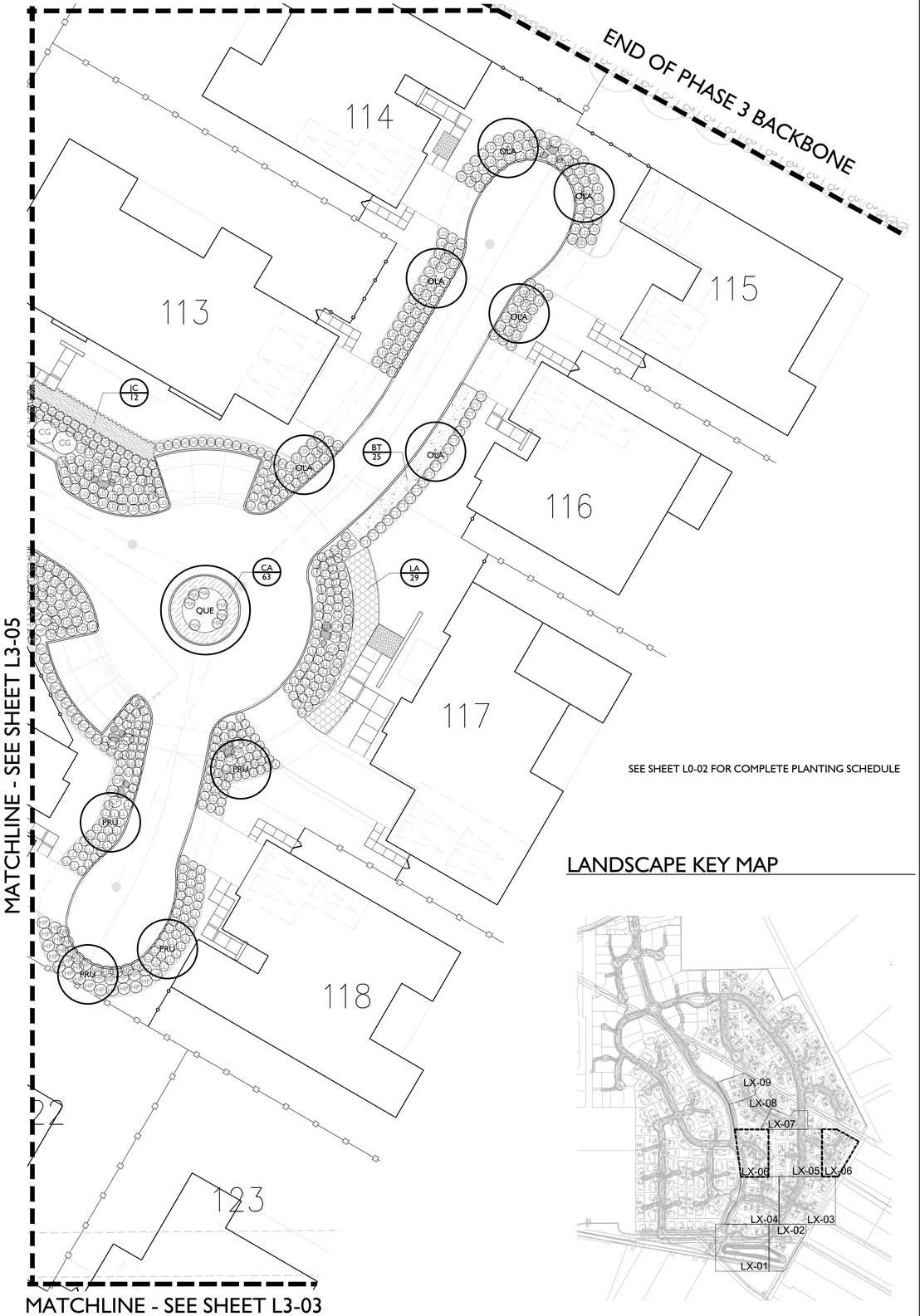

MATCHLINE - SEE SHEET L3-03

SEE SHEET L0-02 FOR COMPLETE PLANTING SCHEDULE

LANDSCAPE KEY MAP

GATES +ASSOCIATES
LANDSCAPE ARCHITECTURE
LAND PLANNING · URBAN DESIGN
1655 N. MAIN ST. STE 365, WALNUT CREEK, CA 94596
T 925.736.8176 www.dgates.com

BORELLO RANCH BACKBONE PHASE 3

MORGAN HILL
CALIFORNIA

Toll Brothers

ISSUE:	DESCRIPTION:	DATE:

REGISTERED LANDSCAPE ARCHITECT · CHRIS GREE · No. 5250 · STATE OF CALIFORNIA
6/30/2022 Renewal Date
11/08/2021 Date
L.A.

PROJECT NUMBER:	5250
DRAWN:	JG, GH
CHECK:	RC
DATE:	11/08/2021
SCALE:	1"=20'

0 10' 20' 40'

PLANTING PLAN

L3-06

© GATES+ASSOCIATES, INC.| 2017

PLANT SCHEDULE

TREES	BOTANICAL NAME	COMMON NAME
ACE	ACER X FREEMANII `JEFFSRED`	AUTUMN BLAZE MAPLE
LAM	LAGERSTROEMIA X `MUSKOGEE`	LAVENDER CRAPE MYRTLE
OLA	OLEA EUROPAEA `FRUITLESS`	FRUITLESS OLIVE
PLC	PLATANUS X ACERIFOLIA `COLUMBIA`	COLUMBIA LONDON PLANE TREE
PRU	PRUNUS SERRULATA	JAPANESE FLOWERING CHERRY
QUE	QUERCUS AGRIFOLIA	COAST LIVE OAK MULTI-TRUNK
QUL	QUERCUS LOBATA	VALLEY OAK

SHRUBS	BOTANICAL NAME	COMMON NAME
CK	CALAMAGROSTIS X ACUTIFLORA `KARL FOERSTER`	FEATHER REED GRASS
CG	CEANOTHUS GRISEUS HORIZONTALIS `YANKEE POINT`	CALIFORNIA LILAC
CH	CHONDROPETALUM ELEPHANTINUM	LARGE CAPE RUSH
CT	CHONDROPETALUM TECTORUM	CAPE RUSH
CP	CORTADERIA SELLOANA `PUMILA`	DWARF PAMPAS GRASS
DG	DIETES GRANDIFLORA	FORTNIGHT LILY
EH	EPILOBIUM CANUM	CALIFORNIA FUCHSIA
HP	HESPERALOE PARVIFLORA	RED YUCCA
JP	JUNCUS PATENS	CALIFORNIA GRAY RUSH
LD	LEYMUS CONDENSATUS `CANYON PRINCE`	CANYON PRINCE GIANT WILD RYE
LL	LOMANDRA LONGIFOLIA `BREEZE`	DWARF MAT RUSH
MA	MIMULUS AURANTIACUS	STICKY MONKEYFLOWER
MC	MUHLENBERGIA CAPILLARIS `REGAL MIST`	REGAL MIST PINK MUHLY GRASS
MR	MUHLENBERGIA RIGENS	DEER GRASS
RC	RHAPHIOLEPIS INDICA `CLARA`	CLARA INDIAN HAWTHORN
RH	ROSMARINUS OFFICINALIS `HUNTINGTON CARPET`	HUNTINGTON CARPET ROSEMARY
SA	SANTOLINA CHAMAECYPARISSUS	LAVENDER COTTON

GROUND COVERS	BOTANICAL NAME	COMMON NAME
AL	ACACIA REDOLENS `LOW BOY`	LOW BOY BANK CATCLAW
BP	BACCHARIS PILULARIS 'TWIN PEAKS#2'	TWIN PEAKS #2 COYOTE BRUSH
BA	BOUTELOUA GRACILIS `BLONDE AMBITION`	BLUE GRAMA
BT	BULBINE FRUTESCENS `TINY TANGERINE`	TINY TANGERINE BULBINE
CA	CAREX DIVULSA	BERKELEY SEDGE
JC	JUNIPERUS CONFERTA `BLUE PACIFIC`	BLUE PACIFIC JUNIPER
LP	LANTANA MONTEVIDENSIS	TRAILING LANTANA
LA	LANTANA MONTEVIDENSIS `ALBA`	WHITE TRAILING LANTANA
TH	TURF HYDROSEED	BIOFILTRATION SOD ™

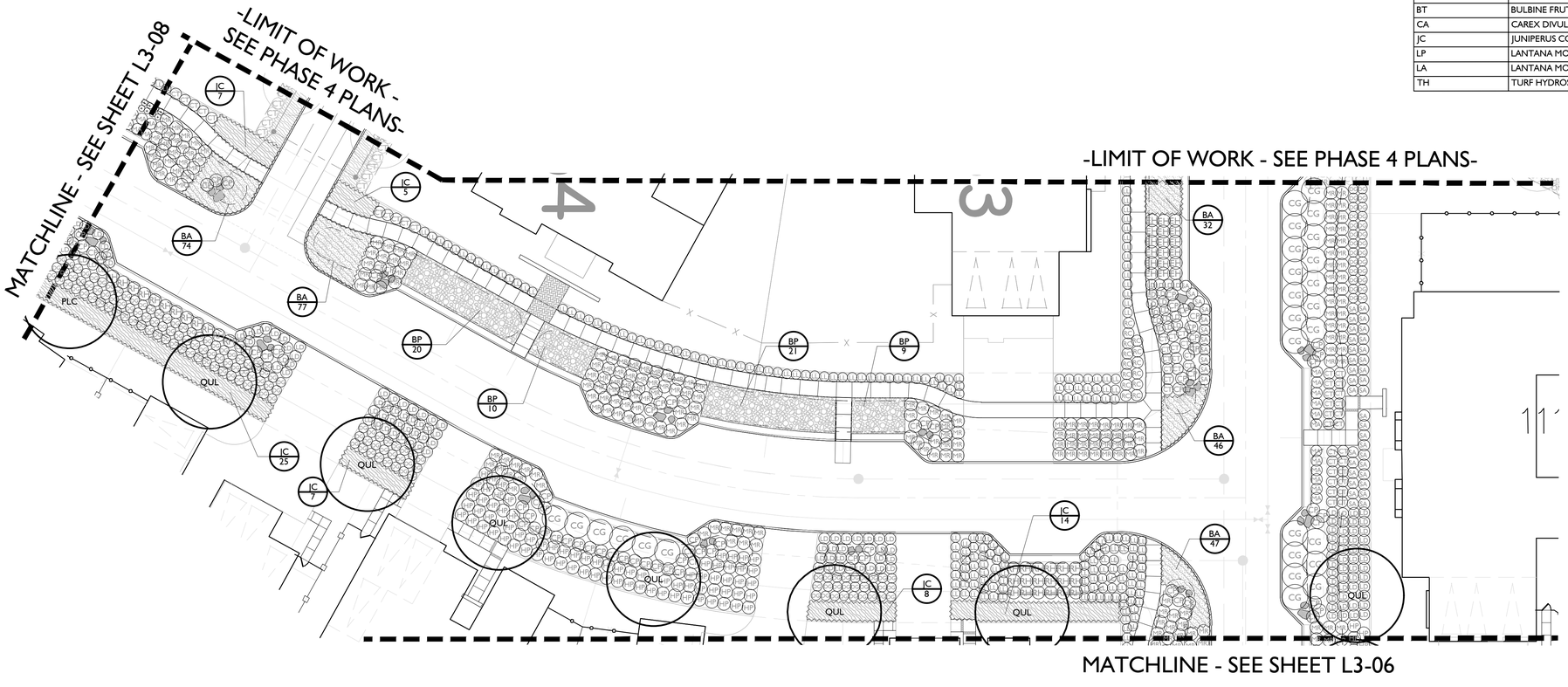

SEE SHEET L0-02 FOR COMPLETE PLANTING SCHEDULE

LANDSCAPE KEY MAP

GATES +ASSOCIATES
LANDSCAPE ARCHITECTURE
LAND PLANNING · URBAN DESIGN
1655 N. MAIN ST. STE 365, WALNUT CREEK, CA 94596
T 925.736.8176 www.dgates.com

BORELLO RANCH BACKBONE PHASE 3

MORGAN HILL
CALIFORNIA

Toll Brothers

ISSUE:	DESCRIPTION:	DATE:

REGISTERED LANDSCAPE ARCHITECT
CARRIE GABE · No. 5257
6/30/2022
Renewal Date
11/08/2021
Date
L.A.
STATE OF CALIFORNIA

PROJECT NUMBER:	5250
DRAWN:	JG, GH
CHECK:	RC
DATE:	11/08/2021
SCALE:	1"=20'

0 10' 20' 40'

PLANTING PLAN

L3-07

© GATES+ASSOCIATES, INC.| 2017

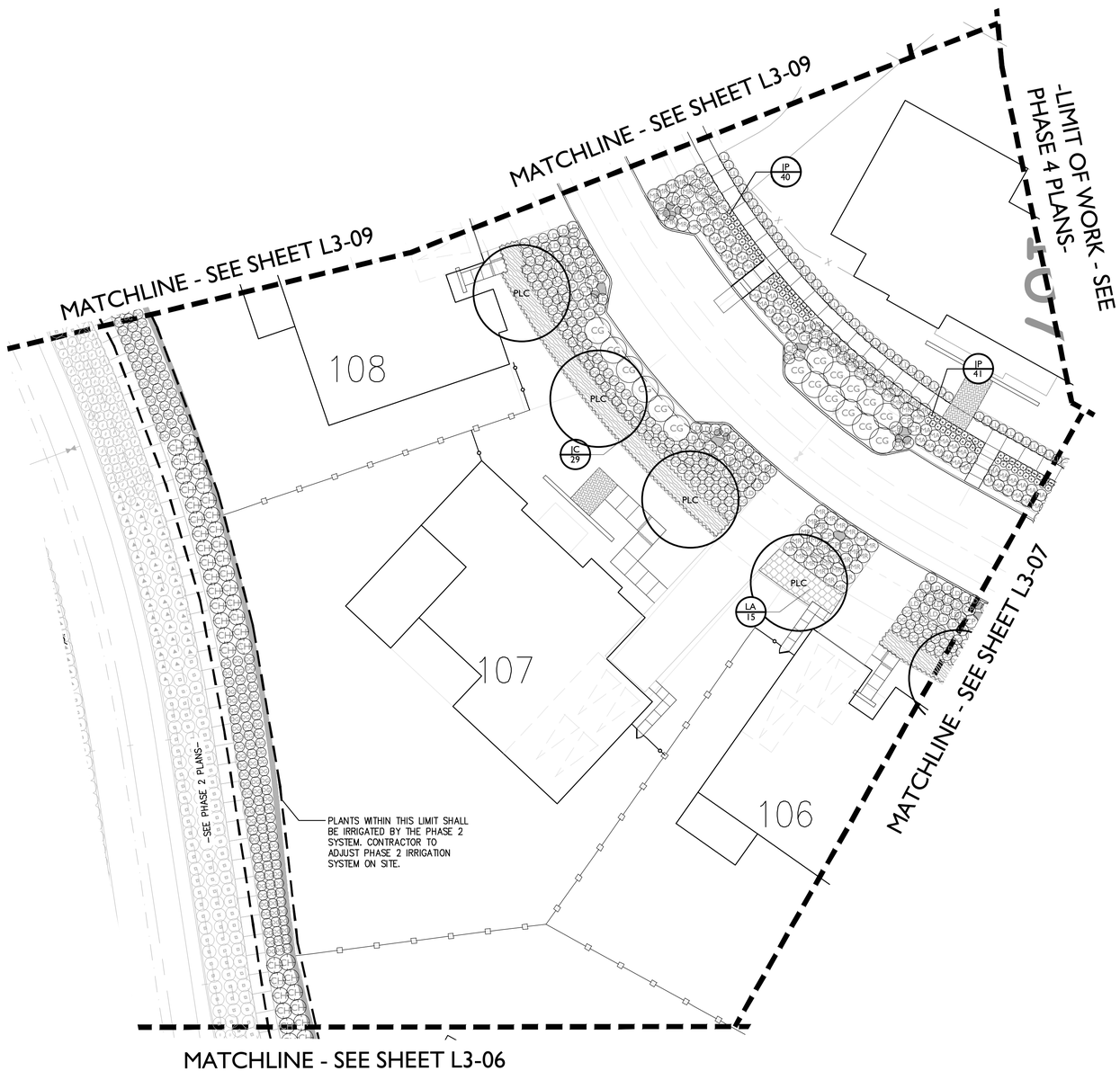

PLANT SCHEDULE

TREES	BOTANICAL NAME	COMMON NAME
ACE	ACER X FREEMANII `JEFFSRED`	AUTUMN BLAZE MAPLE
LAM	LAGERSTROEMIA X `MUSKOGEE`	LAVENDER CRAPE MYRTLE
OLA	OLEA EUROPAEA `FRUITLESS`	FRUITLESS OLIVE
PLC	PLATANUS X ACERIFOLIA `COLUMBIA`	COLUMBIA LONDON PLANE TREE
PRU	PRUNUS SERRULATA	JAPANESE FLOWERING CHERRY
QUE	QUERCUS AGRIFOLIA	COAST LIVE OAK MULTI-TRUNK
QUL	QUERCUS LOBATA	VALLEY OAK

SHRUBS	BOTANICAL NAME	COMMON NAME
CK	CALAMAGROSTIS X ACUTIFLORA `KARL FOERSTER`	FEATHER REED GRASS
CG	CEANOTHUS GRISEUS HORIZONTALIS `YANKEE POINT`	CALIFORNIA LILAC
CH	CHONDROPETALUM ELEPHANTINUM	LARGE CAPE RUSH
CT	CHONDROPETALUM TECTORUM	CAPE RUSH
CP	CORTADERIA SELLOANA `PUMILA`	DWARF PAMPAS GRASS
DG	DIETES GRANDIFLORA	FORTNIGHT LILY
EH	EPILOBIUM CANUM	CALIFORNIA FUCHSIA
HP	HESPERALOE PARVIFLORA	RED YUCCA
JP	JUNCUS PATENS	CALIFORNIA GRAY RUSH
LD	LEYMUS CONDENSATUS `CANYON PRINCE`	CANYON PRINCE GIANT WILD RYE
LL	LOMANDRA LONGIFOLIA `BREEZE`	DWARF MAT RUSH
MA	MIMULUS AURANTIACUS	STICKY MONKEYFLOWER
MC	MUHLENBERGIA CAPILLARIS `REGAL MIST`	REGAL MIST PINK MUHLY GRASS
MR	MUHLENBERGIA RIGENS	DEER GRASS
RC	RHAPHIOLEPIS INDICA `CLARA`	CLARA INDIAN HAWTHORN
RH	ROSMARINUS OFFICINALIS `HUNTINGTON CARPET`	HUNTINGTON CARPET ROSEMARY
SA	SANTOLINA CHAMAECYPARISSUS	LAVENDER COTTON

GROUND COVERS	BOTANICAL NAME	COMMON NAME
AL	ACACIA REDOLENS `LOW BOY`	LOW BOY BANK CATCLAW
BP	BACCHARIS PILULARIS 'TWIN PEAKS#2'	TWIN PEAKS #2 COYOTE BRUSH
BA	BOUTELOUA GRACILIS `BLONDE AMBITION`	BLUE GRAMA
BT	BULBINE FRUTESCENS `TINY TANGERINE`	TINY TANGERINE BULBINE
CA	CAREX DIVULSA	BERKELEY SEDGE
JC	JUNIPERUS CONFERTA `BLUE PACIFIC`	BLUE PACIFIC JUNIPER
LP	LANTANA MONTEVIDENSIS	TRAILING LANTANA
LA	LANTANA MONTEVIDENSIS `ALBA`	WHITE TRAILING LANTANA
TH	TURF HYDROSEED	BIOFILTRATION SOD ™

SEE SHEET L0-02 FOR COMPLETE PLANTING SCHEDULE

LANDSCAPE KEY MAP

GATES +ASSOCIATES
LANDSCAPE ARCHITECTURE
LAND PLANNING · URBAN DESIGN
1655 N. MAIN ST. STE 365, WALNUT CREEK, CA 94596
T 925.736.8176 www.dgates.com

BORELLO RANCH BACKBONE PHASE 3

MORGAN HILL
CALIFORNIA

Toll Brothers

ISSUE:	DESCRIPTION:	DATE:

REGISTERED LANDSCAPE ARCHITECT
CARL GABE · No. 5257
6/30/2022
11/08/2021
L.A.
STATE OF CALIFORNIA

PROJECT NUMBER:	5250
DRAWN:	JG, GH
CHECK:	RC
DATE:	11/08/2021
SCALE:	1"=20'

0 10' 20' 40'

PLANTING PLAN

L3-08

© GATES+ASSOCIATES, INC.| 2017

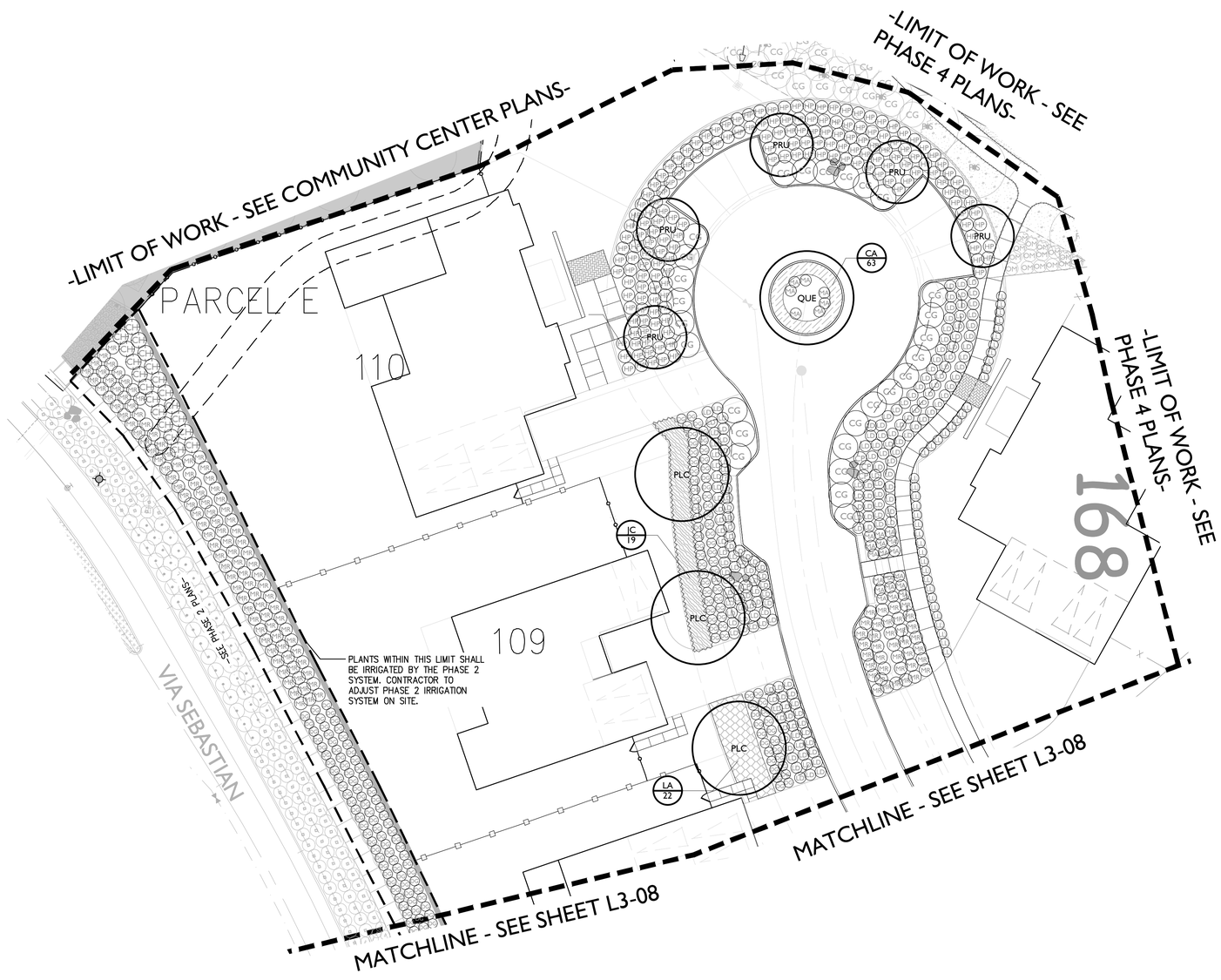

	LANTANA MONTEVIDENSIS `ALBA`	WHITE TRAILING LANTANA	1 GAL
	TURF HYDROSEED	BIOFILTRATION SOD ™	SOD

PLANT SCHEDULE

TREES	BOTANICAL NAME	COMMON NAME
ACE	ACER X FREEMANII `JEFFSRED`	AUTUMN BLAZE MAPLE
LAM	LAGERSTROEMIA X `MUSKOGEE`	LAVENDER CRAPE MYRTLE
OLA	OLEA EUROPAEA `FRUITLESS`	FRUITLESS OLIVE
PLC	PLATANUS X ACERIFOLIA `COLUMBIA`	COLUMBIA LONDON PLANE TREE
PRU	PRUNUS SERRULATA	JAPANESE FLOWERING CHERRY
QUE	QUERCUS AGRIFOLIA	COAST LIVE OAK MULTI-TRUNK
QUL	QUERCUS LOBATA	VALLEY OAK

SHRUBS	BOTANICAL NAME	COMMON NAME
CK	CALAMAGROSTIS X ACUTIFLORA `KARL FOERSTER`	FEATHER REED GRASS
CG	CEANOTHUS GRISEUS HORIZONTALIS `YANKEE POINT`	CALIFORNIA LILAC
CH	CHONDROPETALUM ELEPHANTINUM	LARGE CAPE RUSH
CT	CHONDROPETALUM TECTORUM	CAPE RUSH
CP	CORTADERIA SELLOANA `PUMILA`	DWARF PAMPAS GRASS
DG	DIETES GRANDIFLORA	FORTNIGHT LILY
EH	EPILOBIUM CANUM	CALIFORNIA FUCHSIA
HP	HESPERALOE PARVIFLORA	RED YUCCA
JP	JUNCUS PATENS	CALIFORNIA GRAY RUSH
LD	LEYMUS CONDENSATUS `CANYON PRINCE`	CANYON PRINCE GIANT WILD RYE
LL	LOMANDRA LONGIFOLIA `BREEZE`	DWARF MAT RUSH
MA	MIMULUS AURANTIACUS	STICKY MONKEYFLOWER
MC	MUHLENBERGIA CAPILLARIS `REGAL MIST`	REGAL MIST PINK MUHLY GRASS
MR	MUHLENBERGIA RIGENS	DEER GRASS
RC	RHAPHIOLEPIS INDICA `CLARA`	CLARA INDIAN HAWTHORN
RH	ROSMARINUS OFFICINALIS `HUNTINGTON CARPET`	HUNTINGTON CARPET ROSEMARY
SA	SANTOLINA CHAMAECYPARISSUS	LAVENDER COTTON

GROUND COVERS	BOTANICAL NAME	COMMON NAME
AL	ACACIA REDOLENS `LOW BOY`	LOW BOY BANK CATCLAW
BP	BACCHARIS PILULARIS `TWIN PEAKS#2`	TWIN PEAKS #2 COYOTE BRUSH
BA	BOUTELOUA GRACILIS `BLONDE AMBITION`	BLUE GRAMA
BT	BULBINE FRUTESCENS `TINY TANGERINE`	TINY TANGERINE BULBINE
CA	CAREX DIVULSA	BERKELEY SEDGE
JC	JUNIPERUS CONFERTA `BLUE PACIFIC`	BLUE PACIFIC JUNIPER
LP	LANTANA MONTEVIDENSIS	TRAILING LANTANA
LA	LANTANA MONTEVIDENSIS `ALBA`	WHITE TRAILING LANTANA
TH	TURF HYDROSEED	BIOFILTRATION SOD ™

SEE SHEET L0-02 FOR COMPLETE PLANTING SCHEDULE

LANDSCAPE KEY MAP

GATES +ASSOCIATES
LANDSCAPE ARCHITECTURE
LAND PLANNING · URBAN DESIGN
1655 N. MAIN ST. STE 365, WALNUT CREEK, CA 94596
T 925.736.8176 www.dgates.com

BORELLO RANCH BACKBONE PHASE 3

MORGAN HILL
CALIFORNIA

Toll Brothers

ISSUE:	DESCRIPTION:	DATE:

REGISTERED LANDSCAPE ARCHITECT
CHRISTOPHER CASE
No. 5250
5/30/2022
Renewal Date
11/08/2021
Date
L.A.
STATE OF CALIFORNIA

PROJECT NUMBER:	5250
DRAWN:	JG, GH
CHECK:	RC
DATE:	11/08/2021
SCALE:	1"=20'

0 10' 20' 40'

PLANTING PLAN

L3-09

© GATES+ASSOCIATES, INC.| 2017

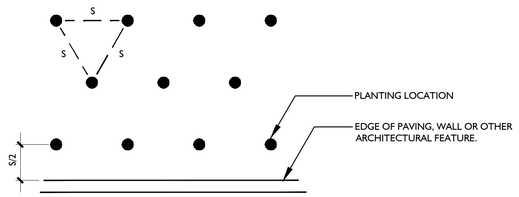

NOTES:

A. S = PLANT SPACING DISTANCE ON CENTER, SEE CHART

B. FOR USE AS A GUIDE FOR SHRUBS AND GROUNDCOVER WHEN PLANTS ARE SPACED EQUIDISTANT FROM EACH OTHER.

Plant Quantity Chart	
Spacing	# of Plants/S.F.
6" o.c.	4.60
8" o.c.	2.60
12" o.c.	1.15
18" o.c.	.512
24" o.c.	.290
30" o.c.	.185
36" o.c.	.128
42" o.c.	.087
48" o.c.	.063

6 PLANT SPACING

SCALE: N.T.S.

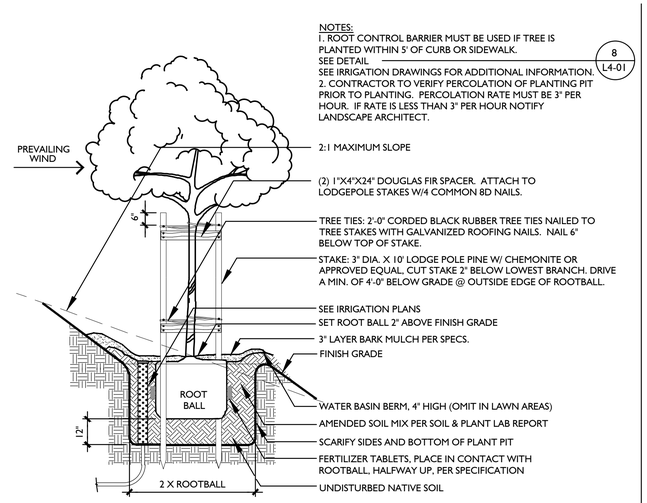

3 TREE PLANTING ON SLOPE

SCALE: 3/8" = 1'-0"

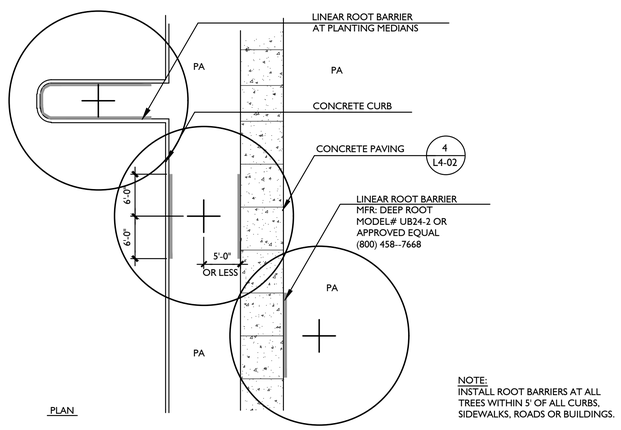

NOTE:
INSTALL ROOT BARRIERS AT ALL TREES WITHIN 5' OF ALL CURBS, SIDEWALKS, ROADS OR BUILDINGS.

8 LINEAR ROOT BARRIER

SCALE: 1" = 10'-0"

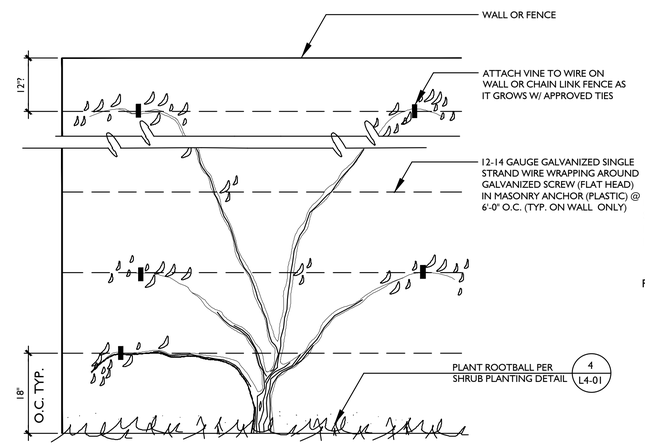

5 VINE PLANTING

SCALE: NTS

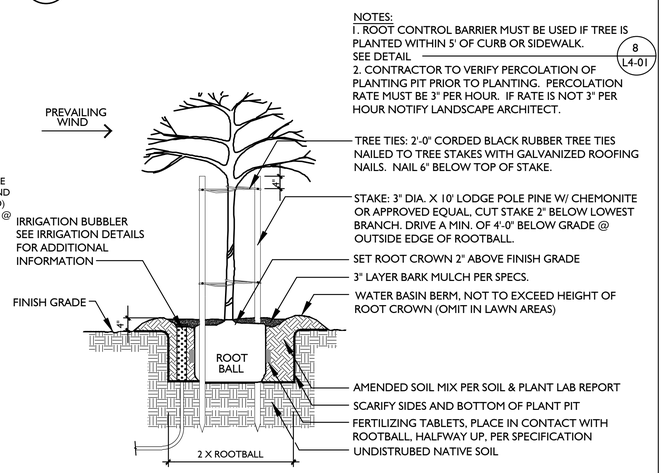

2 TREE PLANTING DETAIL

SCALE: 3/8" = 1'-0"

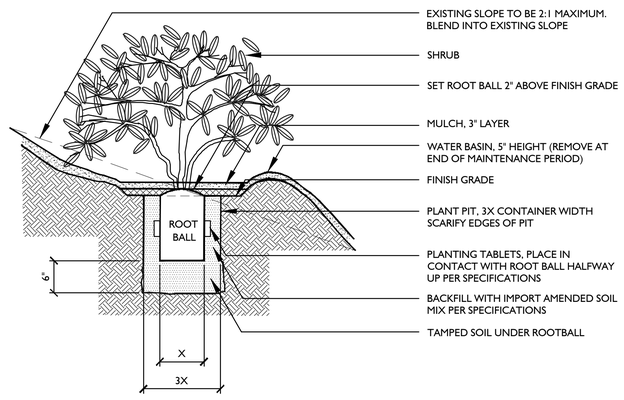

7 SHRUB PLANTING ON SLOPE

SCALE: N.T.S.

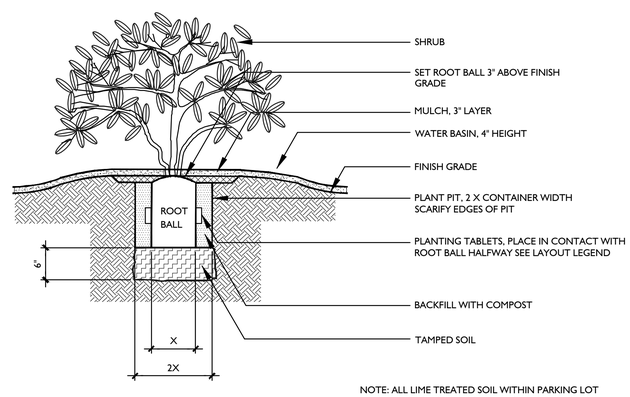

NOTE: ALL LIME TREATED SOIL WITHIN PARKING LOT AND BUILDING TO BE EXCAVATED AND REPLACED WITH CLEAN IMPORT SOIL, SEE SPECS.

4 SHRUB PLANTING

SCALE: N.T.S.

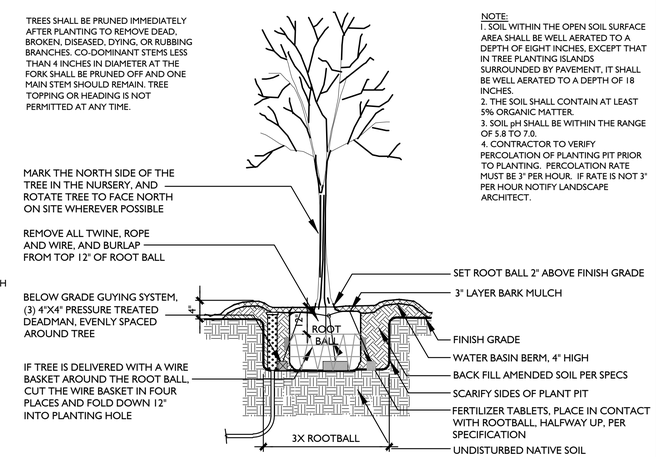

1 TREE PLANTING - BALLED & BURLAPPED TREE

SCALE: 3/8" = 1'-0"

GATES +ASSOCIATES
LANDSCAPE ARCHITECTURE
LAND PLANNING · URBAN DESIGN
1655 N. MAIN ST. STE 365, WALNUT CREEK, CA 94596
T 925.736.8176 www.dgates.com

BORELLO RANCH BACKBONE PHASE 3

MORGAN HILL
CALIFORNIA

Toll Brothers

ISSUE:	DESCRIPTION:	DATE:

PROJECT NUMBER:	5250
DRAWN:	JG, GH
CHECK:	RC
DATE:	11/08/2021
SCALE:	PER DETAIL

0 1 2

LANDSCAPE DETAILS

L4-01

© GATES+ASSOCIATES, INC.| 2017

PATH: P:\MORGAN HILL\BORELLO (5250)\ACAD\BORELLO BACKBONE - PHASE 3\SHEETS_DG-D-5250-BACKBONE PHASE 3_.DWG
PLOT DATE: 11/7/2021 10:55 AM

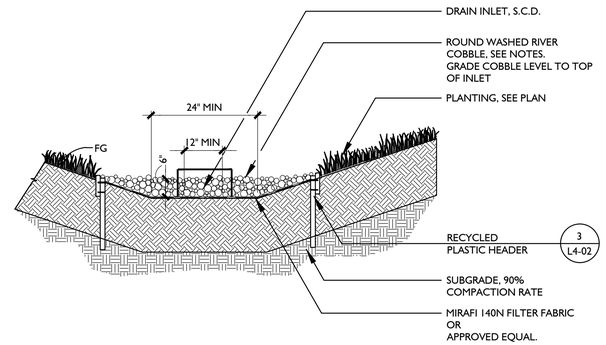

6 COBBLE FORE BAY/SURROUND SECTION

SCALE: 1/2" = 1'-0"

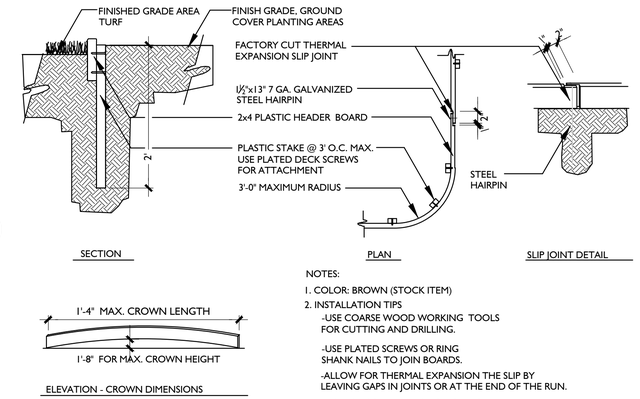

NOTES:

1. COLOR: BROWN (STOCK ITEM)
2. INSTALLATION TIPS
   - -USE COARSE WOOD WORKING TOOLS FOR CUTTING AND DRILLING.
   - -USE PLATED SCREWS OR RING SHANK NAILS TO JOIN BOARDS.
   - -ALLOW FOR THERMAL EXPANSION THE SLIP BY LEAVING GAPS IN JOINTS OR AT THE END OF THE RUN.
   - -DO NOT SCREW THROUGH SLIP JOINT.

3 RECYCLED PLASTIC HEADER BOARD

SCALE: 1" = 1'-0"

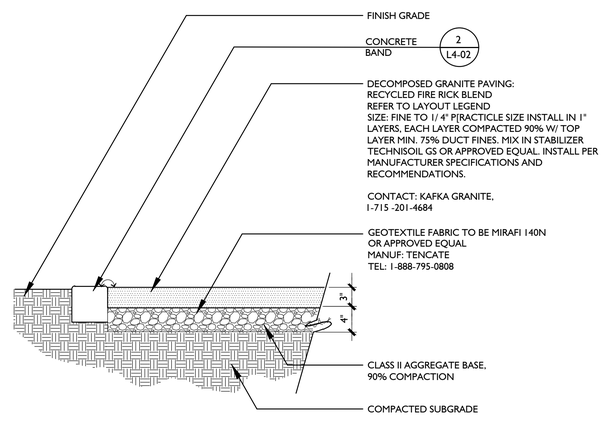

5 DECOMPOSED GRANITE PAVING

SCALE: 1" = 1'-0"

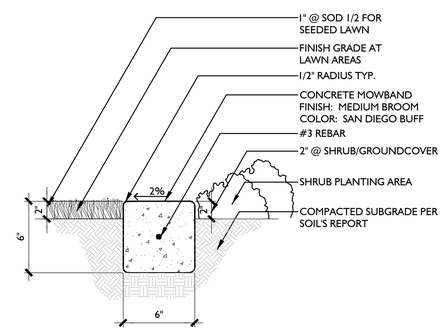

2 CONCRETE MOWBAND

SCALE: 1-1/2" = 1'-0"

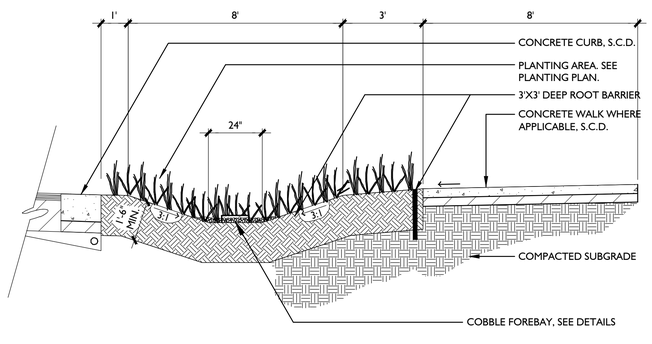

7 VEGETATED SWALE

SCALE: 3/8" = 1'-0"

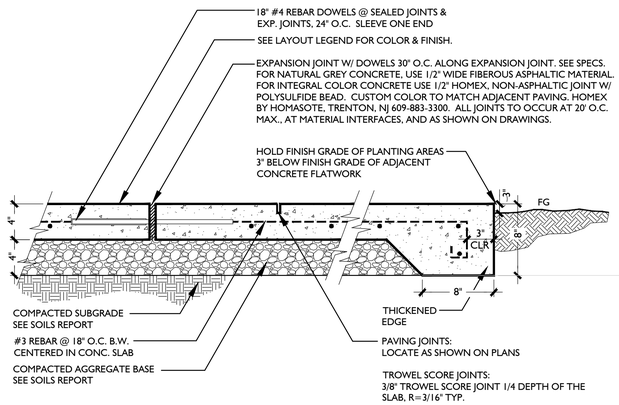

4 PEDESTRIAN CONCRETE PAVING

SCALE: 1 1/2" = 1'-0"

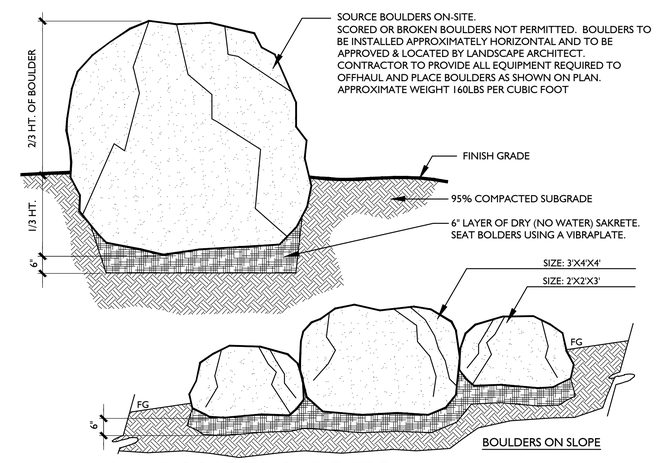

1 LANDSCAPE BOULDERS

SCALE: N.T.S.

GATES +ASSOCIATES
LANDSCAPE ARCHITECTURE
LAND PLANNING · URBAN DESIGN
1655 N. MAIN ST. STE 365, WALNUT CREEK, CA 94596
T 925.736.8176 www.dgates.com

BORELLO RANCH BACKBONE PHASE 3

MORGAN HILL
CALIFORNIA

Toll Brothers

ISSUE:	DESCRIPTION:	DATE:

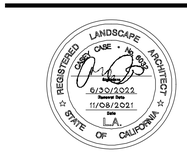

PROJECT NUMBER:	5250
DRAWN:	JG, GH
CHECK:	RC
DATE:	11/08/2021
SCALE:	PER DETAIL

0 1" 2" 1' 2'

LANDSCAPE DETAILS

L4-02

© GATES+ASSOCIATES, INC. | 2017

PATH: P:\MORGAN HILL\BORELLO (5250)\CAD\BORELLO BACKBONE - PHASE 3\SHEETS_DG-D-5250-BACKBONE PHASE 3_.DWG
PLOT DATE: 11/17/2021 10:55 AM

ELEVATION

KEY:

1. 8X8X16 C.M.U. BLOCK WITH #5 @16" O.C. VERTICAL AND HORIZONTAL.
2. 12"X12" FIELD AND SUBWAY TILE STACKED
3. CMU BUILD UP WITH SMOOTH PLASTER FINISH
   FINISH: 1" MIN. 3-COAT STUCCO SYSTEM. PROCESS SHALL INCLUDE SCRATCH COAT TO DEPTH OF 3/8", BROWN COAT TO A DEPTH OF 3/8" AND FINISH COAT TO A DEPTH OF 1/8". PRIME AND PAINT 2 COATS SHERWIN WILLIAMS PAINTS EXTERIOR LATEX COLOR: SW7012 CREAMY
4. 90% COMPACTED SUBGRADE
5. DRIP SCREED - 1" ABOVE GRADE
6. FINISH GRADE - SEE GRADING PLANS
7. FOOTING, PER STRUCTURAL

NOTES:
1. THIS IS A DESIGN INTENT DRAWING ONLY, CONTRACTOR TO SUBMIT SHOP DRAWINGS FOR APPROVAL PRIOR TO INSTALLATION.

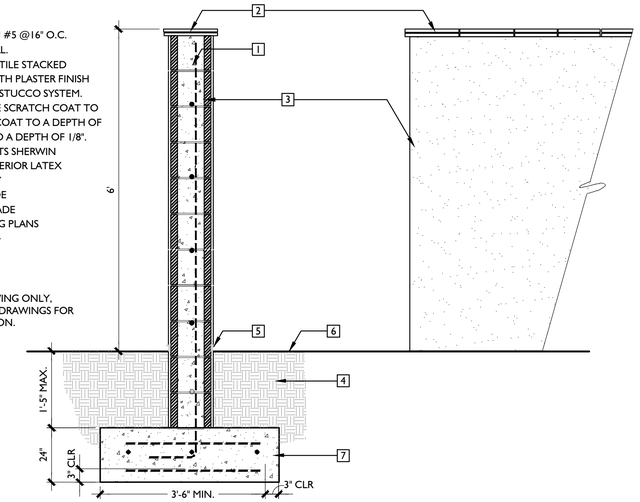

SECTION

3 MASONRY WALL

SCALE: 3/4" = 1'-0"

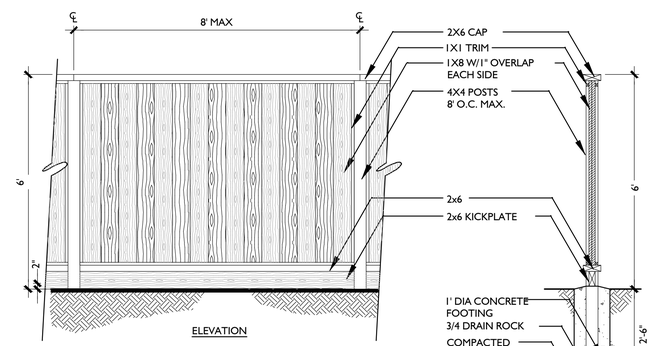

ELEVATION

SECTION

NOTE:
1. ALL FASTENERS TO BE GALVANIZED.
2. ALL WOOD TO BE CON. HEART REDWOOD.
3. PROVIDE CLEAR SEALANT ON ALL WOOD SURFACES.
4. ALL POSTS SHALL BE EQUALLY SPACED.

2 6' GOOD NEIGHBOR FENCE

SCALE: 1/2" = 1'-0"

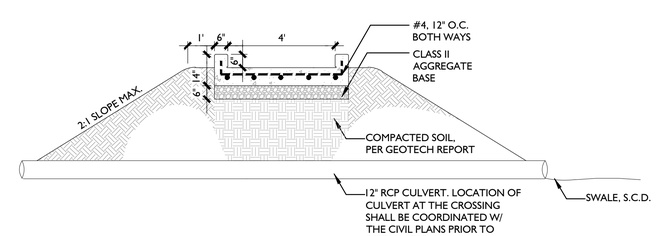

1 PEDESTRIAN CULVERT CROSSING

SCALE: 3/8" = 1'-0"

GATES +ASSOCIATES
LANDSCAPE ARCHITECTURE
LAND PLANNING · URBAN DESIGN
1655 N. MAIN ST. STE 365, WALNUT CREEK, CA 94596
T 925.736.8176 www.dgates.com

BORELLO RANCH BACKBONE PHASE 3

MORGAN HILL
CALIFORNIA

Toll Brothers

ISSUE:	DESCRIPTION:	DATE:

REGISTERED LANDSCAPE ARCHITECT
CHRISTOPHER CASE
No. 4903
6/30/2022
Renewal Date
11/08/2021
Date
L.A.
STATE OF CALIFORNIA

PROJECT NUMBER:	5250
DRAWN:	JG, GH
CHECK:	RC
DATE:	11/08/2021
SCALE:	PER DETAIL

0 - - - -
1/2" 1/4" 1" 2"

LANDSCAPE DETAILS

L4-03

© GATES+ASSOCIATES, INC. | 2017

PATH: P:\MORGAN HILL\BORELLO (5250)\ACAD\BORELLO BACKBONE - PHASE 3\SHEETS_DG-D-5250-BACKBONE PHASE 3_.DWG
PLOT DATE: 11/17/2021 10:55 AM